ADDENDUM NUMBER ONE

Date: October 8, 2020

Project: Street Resurfacing (S20-1) – Bid No. 7372-W0
City of Worcester Department of Public Works and Parks
DPW&P – Engineering Division

Bid Opening Date

The Bid Opening date is extended until October 21, 2020.

Contract Completion Date

The Contract Completion date is extended from December 31, 2020 to April 1, 2021. All work after November 15, 2020 must adhere to winter permit conditions. No consideration for extra payment will be considered for working in "winter conditions".

Added/Amended Items

ITEM 428.00 BITUMINOUS CONCRETE ROADWAY REPAIR quantity has been increased to 110 SY.

ITEM 434.00 SAWING PAVEMENT quantity has been increased to 2,380 LF.

ITEM 436.00 RESURFACE TRENCHES TEMPORARY quantity has been increased to 1,200 SY.

ITEM 436.00 RESURFACE TRENCHES PERMANENT quantity has been increased to 1,200 SY.

ITEM 969.2020 ELECTRICAL TRUNK-LINE 9-5" CONDUIT has been added with a quantity of 880 LF.

ITEM 970.2020 ELECTRICAL TRUNK-LINE 6-5" CONDUIT has been added with a quantity of 110 LF.

ITEM 971.2020 ELECTRIC MANHOLE 2-WAY has been added with a quantity of 1 EA.

ITEM 972.2020 ELECTRIC MANHOLE 3-WAY has been added with a quantity of 3 EA.

SPECIAL PROVISIONS

Rigid Road Base is expected to be encountered under the surface asphalt during the saw cutting and trenching in Belmont Street. There will be no additional payments for the removal or disposal of rigid road base.

ITEM 428.00 BITUMINOUS CONCRETE ROADWAY REPAIR

General:
ITEM 428.00 is to be used for the repair of the roadway trenches in Belmont Street. This item replaces ITEMS 434.00 and 436.00 for the paving of Belmont Street. This item will cover all surface and subsurface work to complete the pavement repair in Belmont Street. These include but are not limited to grading, compaction, placement of asphalt to replace expected rigid roadway removed, grinding, etc. 12.5MM Superpave Asphalt, placed by a City of Worcester approved pavement contractor and compacted in 2 inch lifts, to a total depth of 8 inches, or matching the depth of the surrounding pavement, whichever is less. This will bring the surface of the temporary trench level with the surrounding surface of Belmont Street. The permanent repair will include a 2 inch grind at least 2 feet beyond the original limits of each edge of the trench. This 2 foot widening will be increase if needed in order to “square up” the patch. Multiple trenches in close proximity are to be combined within the final patch. A 2 inch lift of 12.5MM Superpave Asphalt will then be placed, again by a City of Worcester approved pavement contractor, as the final surface course. Final pavement will not occur until after National Grid has connected the placed trunk-line to the electric manhole in Belmont Street.

Payment:
Payment shall be based on the square yard area of the originally excavated utility trench(s).

ITEM 969.2020 ELECTRICAL TRUNK-LINE 9-5” CONDUIT

General:
ITEM 969.2020 is to be placed in accordance with the provided plans and the National Grid Specifications provided. This includes all materials and labor necessary to install the trunk-line, complete and in place. These include but are not limited to, excavation, 5 inch PVC conduit, bends, adhesive, concrete, gravel, backfill and compaction of the trench, warning tape, etc.

Payment:
Payment shall be based on the linear foot length of the placed 9 conduit trunk-line.

SPECIAL PROVISIONS (cont.)

ITEM 970.2020 ELECTRICAL TRUNK-LINE 6-5" CONDUIT

General:
ITEM 970.2020 is to be placed in accordance with the provided plans and the National Grid Specifications provided. This includes all materials and labor necessary to install the trunk-line, complete and in place. These include but are not limited to, excavation, 5 inch PVC conduit, bends, adhesive, concrete, gravel, backfill and compaction of the trench, warning tape, etc.

Payment:
Payment shall be based on the linear foot length of the placed 6 conduit trunk-line.

ITEM 971.2020 ELECTRIC MANHOLE 2-WAY

General:
ITEM 971.2020 is to be placed in accordance with the provided plans and the National Grid Specifications provided. This includes all materials and labor necessary to install the manhole, complete and in place. These include but are not limited to, excavation, production and installation of the manhole, manhole casting, casting placement and adjustment, backfill and compaction of the excavation, etc.

Payment:
Payment shall be per EACH manhole, complete and in place.

ITEM 972.2020 ELECTRIC MANHOLE 3-WAY

General:
ITEM 972.2020 is to be placed in accordance with the provided plans and the National Grid Specifications provided. This includes all materials and labor necessary to install the manholes, complete and in place. These include but are not limited to, excavation, production and installation of the manhole, manhole casting, casting placement and adjustment, backfill and compaction of the excavation, etc.

Payment:
Payment shall be per EACH manhole, complete and in place.

NATIONAL GRID INSPECTIONS

All electrical based installations, conduit, manholes, etc., must be inspected by a representative from National Grid. It will be the contractor's responsibility to contact and schedule all inspections with National Grid. Contact information will be provided to the awarded contractor.

Attachments: Bid Sheets, Electrical Plans and Specifications

S20-5 Hospital Drive Phase I ADDENDUM 1

THE BIDDER MUST FILL IN THESE UNIT PRICES. Also carry out all extensions and fill in "Computed Totals."
In case of error or discrepancies, UNIT PRICES govern and written works take precedence over figures.

ITEM NUMBER AND DESCRIPTION		ESTIMATED QUANTITY	COMPUTED TOTALS
116.0000	EXCAVATION		
	_____ Dollars ($ _____) CY	50.00	$ _____
120.0000	CLASS "B" ROCK EXCAVATION AND DISPOSAL		
	_____ Dollars ($ _____) CY	120.00	$ _____
125.0000	SAND BORROW		
	_____ Dollars ($ _____) CY	150.00	$ _____
126.0000	GRAVEL BORROW		
	_____ Dollars ($ _____) CY	80.00	$ _____
128.0000	SCREENED LOAM BORROW		
	_____ Dollars ($ _____) CY	90.00	$ _____
156.0000	SEEDING		
	_____ Dollars ($ _____) SY	200.00	$ _____
171.0000	INSTALLATION AND MAINTENANCE OF EROSION CONTROLS		
	_____ Dollars ($ _____) LF	1,600.00	$ _____
220.0800	TRENCH EXCAVATION AND BACKFILL, FURNISH AND INSTALL 8" PVC		
	_____ Dollars ($ _____) LF	26.00	$ _____
220.1200	TRENCH EXCAVATION AND BACKFILL, FURNISH AND INSTALL 12" PVC		
	_____ Dollars ($ _____) LF	1,073.00	$ _____

ITEM NUMBER AND DESCRIPTION		ESTIMATED QUANTITY	COMPUTED TOTALS
230.4000	4' MANHOLE BASE		
	_____ Dollars ($ _____) EA	9.00	$ _____
231.4000	4' MANHOLE SECTION		
	_____ Dollars ($ _____) VF	56.00	$ _____
236.0000	MANHOLE FRAME & COVER		
	_____ Dollars ($ _____) EA	9.00	$ _____
250.0000	MANHOLE FRAMES, REMOVE, PLATE & RETAIN		
	_____ Dollars ($ _____) EA	2.00	$ _____
265.0000	REMOVE AND DISPOSE OF EXISTING MANHOLE		
	_____ Dollars ($ _____) EA	1.00	$ _____
301.0600	6” CLDI Pipe		
	_____ Dollars ($ _____) LF	40.00	$ _____
301.0800	8” CLDI Pipe		
	_____ Dollars ($ _____) LF	150.00	$ _____
301.1000	10” CLDI Pipe		
	_____ Dollars ($ _____) LF	1,010.00	$ _____
301.5000	Polyethylene Wrap for Ductile Iron Pipe		
	_____ Dollars ($ _____) LF	1,100.00	$ _____
302.1000	Cast or Ductile Fittings		
	_____ Dollars ($ _____) LB	1,200.00	$ _____

ITEM NUMBER AND DESCRIPTION		ESTIMATED QUANTITY	COMPUTED TOTALS
304.0100	VALVE BOX		
	_____ Dollars ($ _____) EA	8.00	$ _____
305.0600	6” Gate Valve		
	_____ Dollars ($ _____) EA	3.00	$ _____
305.0800	8” Gate Valve		
	_____ Dollars ($ _____) EA	2.00	$ _____
305.1000	10” Gate Valve		
	_____ Dollars ($ _____) EA	3.00	$ _____
305.1200	12” Gate Valve		
	_____ Dollars ($ _____) EA	1.00	$ _____
310.1000	New Hydrant		
	_____ Dollars ($ _____) EA	3.00	$ _____
310.6000	HYDRANT PAINTING		
	_____ Dollars ($ _____) EA	3.00	$ _____
312.1000	10” Tie-in		
	_____ Dollars ($ _____) EA	1.00	$ _____
313.1000	Thrust Block		
	_____ Dollars ($ _____) CY	20.00	$ _____
428.0000	BITUMINOUS CONCRETE ROADWAY REPAIR		
	_____ Dollars ($ _____) SY	110.00	$ _____

ITEM NUMBER AND DESCRIPTION		ESTIMATED QUANTITY	COMPUTED TOTALS
434.0000	SAWING PAVEMENT		
	Dollars	2,380.00	$
	($) LF		
436.0000	RESURFACE TRENCHES TEMPORARY		
	Dollars	1,200.00	$
	($) LF		
436.0100	RESURFACE TRENCHES PERMANENT		
	TWENTY FIVE Dollars	1,200.00	$ 30,000.00
	($ 25.00) LF		
900.0000	Lump Sum Reserve		
	eighty thousand and xx / 100 Dollars		$ 80,000.00
969.2020	ELECTRICAL TRUNK LINE 9-5" CONDUIT		
	Dollars	880.00	$
	($) LF		
970.2020	ELECTRICAL TRUNK LINE 6-5" CONDUIT		
	Dollars	110.00	$
	($) LF		
971.2020	ELECTRIC MANHOLE 2-WAY		
	Dollars	1.00	$
	($) EA		
972.0000	ELECTRIC MANHOLE 3-WAY		
	Dollars	3.00	$
	($) EA		

TOTAL BID PRICE INCLUDING CONTINGENCY

_____Dollars and _____Cents
(amount in words)

$ _____
(amount in figures)

This proposal is based on provisions of the following addenda:

No. _____ No. _____

No. _____ No. _____

All amounts and totals given above will be subject to verification by the City. In case of variation between Unit Bid Price and Totals shown by the Bidder, the Unit Price written in words will be considered to be the bid.

The City reserves the right to reject any and all bids, wholly or in part, and to make awards in a manner deemed in the best interests of the City.

The above estimated quantities form an approximate statement of the extent of the work to be done, based upon the estimate of the Contracting Officer. The City does not expressly or by implication agree that the actual quantity of work will correspond therewith, but reserves the right to increase or decrease the quantity of any class or portion of the work, as may be deemed necessary by the Contracting Officer.

Supplement to

Specifications for Electrical Installations

Underground Commercial Distribution (UCD) Installation and Responsibility Guide

Electric System Bulletin No. 759B
July 2010
(Supersedes all previous versions of ESB 759)

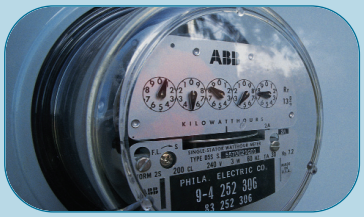

nationalgrid
The power of action.℠

Supplement to

Specifications for Electrical Installations

Underground Commercial Distribution (UCD) Installation and Responsibility Guide

Electric System Bulletin No. 759B
July 2010
(Supersedes all previous versions of ESB 759)

TABLE OF CONTENTS

UCD Specifications and Installation Guide Acknowledgement (Job Spec/Signoff Forms).....1
1.0 Scope.....5
2.0 General Requirements.....5
3.0 Type of Service.....5
4.0 Plans.....6
5.0 Permits.....6
6.0 Easements.....6
7.0 Responsibility and Ownership.....7
8.0 Transformer Clearance From a Building.....10
9.0 Transformer Clearance From Objects.....11
10.0 Transformer Accessibility.....11
11.0 Transformer Mechanical Protection/Bollards.....12
12.0 Transformer Pad.....13
13.0 Transformer Secondary.....13
13.1 Transformer Secondary Connections.....15
13.2 Secondary Bolt Assembly.....15
13.3 Secondary Splice Box.....16
14.0 Transformer Sweep Entry.....16
15.0 Transformer Grounding and Bonding.....16
16.0 Oil Containment.....18
17.0 Riser Pole.....20
18.0 Heavy Duty Handhole.....21
19.0 Primary Cable Pull/Splice Box.....22
20.0 Trench Requirements.....23
20.1 Trench Depth New York/New England Concrete Encased Conduit.....23
20.2 Trench Depth Conduit Direct Buried New York (under certain circumstances agreeable with the Company).....23
20.3 Trench Depth Direct Buried New York.....23
Figure 20.0-1 Typical Trenches.....26
21.0 Conduit Requirements.....26
21.1 Pulling Tape.....26
21.2 Trench and Conduit System Inspection.....26

22.0 Primary Cable and Electrical Equipment.....26
23.0 Secondary Cable and Conduit System.....26
24.0 Metering.....27
25.0 Manhole.....27
25.1 Manhole Frame, Ring and Cover.....28
25.2 Switchgear Manhole.....29
25.3 Switchgear Manhole Ground Grid.....32
25.4 Switch Gear Manhole Bollard Layout.....33
26.0 Fiberglass Switchgear Base with Conduit Entry's.....34
26.1 Fiberglass Switchgear Ground Grid.....35
26.2 Switch Gear Fiberglass Boxpad Bollard Layout.....36
27.0 Transformer Pad Specifications.....37
Figure 27.0-1 15kV Transformer Pad 75- 500kVA 44-113.....37
Figure 27.0-2 15kV Transformer Pad 750- 2500kVA 44-114.....38
Figure 27.0-3 25-35kV Transformer Pad 75- 300kVA 44-115.....39
Figure 27.0-4 25-35kV Transformer Pad 500-2500kVA 44-116.....40
28.0 Sample Installations 41
29.0 Bollard Detail.....44
30.0 Concrete Specifications.....45
31.0 Easement Applications.....49
31.1 New England Easement Application Form.....49
31.2 New York Easement Application Form.....51
32.0 Concrete Approved Precast Manufacturers.....53
33.0 Approved Materials – Underground Commercial Installations.....54
34.0 Other Materials/Suppliers.....56
35.0 Job Check off Sheets.....57
35.1 3 Phase UCD Direct Burial Inspection Check List New York.....57
35.2 3 Phase, Conduit Encased in Concrete Inspection Check List.....58
35.3 3 Phase UCD Conduit Inspection Check List New York.....59
35.4 Transformer Foundation Inspection Check List.....60
36.0 Cable Installation Maximum Pull Chart.....61
37.0 Padmount Compartment Sealing Requirement.....62
38.0 Revision History.....63

URD Specifications and Installation Guide Acknowledgement (Job Spec/Signoff Forms)

The requirements and specifications outlined in this guide book must be strictly followed. Any requirements not adhered to can pose safety problems, can be detrimental to the installed system and must be corrected before final acceptance. The customer will bear full cost to make corrections to sub-standard installations.

Customer is responsible to provide enough lead time for the company to design job, provide inspections and install company equipment where applicable.

Typical lead times are shown below.

	Lead-Time	**Notes**
Design and Layout	Eight weeks	Company receives all required plans, load data and easement information
Pad Inspection NE	One day	Company inspector
Trench Inspection	3 days	Company inspector
Company Installation	4 weeks	After all inspections are approved and permits/easements are procured.
NOTE: The above times are estimates only.		

Project Title_____

Location_____

Owner/Developer_____

Customer's Representative _____ Date_____

Company Representative_____ Date_____

Specifications Issued_____ Date_____

Company's Copy

UCD Specifications and Installation Guide Acknowledgement

The requirements and specifications outlined in this guide book must be strictly followed. Any requirements not adhered to can pose safety problems, can be detrimental to the installed system and must be corrected before final acceptance. The customer will bear full cost to make corrections to sub-standard installations.

Customer is responsible to provide enough lead time for the company to design job, provide inspections and install company equipment where applicable.

Typical lead times are shown below Design and Layout.

	Lead-Time	**Notes**
Design and Layout	Eight weeks	Company receives all required plans, load data, and easement information
Pad Inspection NE	One day	Company inspector
Trench Inspection	Three days	Company inspector
Company Installation)	4 weeks	After all inspections are approved and permits/easements are procured.
NOTE: The above times are estimates only.		

Project Title_____

Location_____

Owner/Developer_____

Customer's Representative _____ Date_____

Company Representative_____ Date_____

Specifications Issued_____ Date_____

Customer's Copy

1.0 Scope

The purpose of this specification is to define, interpret and clarify the scope of work and material dealing with services to padmounted transformers and is a Supplement to Electric SYstem Bulletin (ESB) 750). This specification does not cover any primary metering.

It is important that the Specifications for Electrical Installations book (ESB 750) be obtained and referred to in conjunction with this supplement for these installations. Any reference in this specification to the Company shall mean the nationalgrid Company. Any reference to the Customer shall mean the Contractor, Developer or property owner.

2.0 General Requirements

All electrical wiring to be connected to the *Company* equipment shall be installed in accordance with one or all of the following:

- Local Municipal Inspection Authority
- State's Electrical Code
- National Electrical Code
- National Electrical Safety Code
- Applicable Distribution Construction Standards of the *Company*
- National Grid's Specifications for Electrical Installations

There shall be no attempt to deviate from either the Distribution Standards of the company or the *Company* construction plan without the approval of the *Company*. Any specifications noted shall supersede the Specifications for Electrical Installations booklet unless otherwise approved by the *Company*.

Often a pre-construction meeting is helpful to all parties to ensure timely completion of the project. The *Company* Business Service Representative will make the necessary arrangements for a pre-construction meeting, or a meeting to discuss changes. *Company* representatives will be available to discuss construction problems when requested or during a field visit

References:

- ESB 750 - Specifications for Electrical Installations
- ESB 754 - Outdoor Padmounted or Vault Enclosed Three Phase Transformer

All ESB's are available at **http://www.nationalgridus.com/electricalspecifications**

The Customer shall be responsible to have all electrical and physical design documents prepared and updated by a design professional, in accordance with Section 1.7 of ESB 750 for the trenching, conduit, transformer pad, and handhole installations.

3.0 Type of Service

Electric service shall be three phase, four wire, 208Y/120 volts or 480Y/277 volt supplied from a padmount transformer to be located on the Customer's premises. The primary electrical service to the padmounted transformer will be supplied from a pole or cable system owned by the Company, except in New Hampshire. In New Hampshire, the primary service to the transformer shall be customer owned.

4.0 Plans

When municipal approval is required, the *Company* shall receive final town approved development plans on a scale not less than one-inch equal to one hundred feet prior to engineering construction plans. The property site plan shall show all proposed and existing utilities, i.e. water, gas, sewer, cable television, telephone, etc.

Direct Burial Systems in general: the *Company* specifies an arrangement whereby the *Company's* power cables may run parallel with communication and other power cables, but not parallel with other utilities e.g. water, gas, sewer. These utilities shall be in a separate trench. The other utilities must maintain clearances as outlined in the NESC or by mutual agreement. Nationalgrid gas is permitted in the same trench with the following requirements: gas shall be at a minimum depth of 18" and shall maintain a minimum separation of 12" between all other utilities.

Conduit Systems in general: the *Company* requires a spare conduit for all *Company* owned duct systems, as shown in *Company* plans. The *Company* duct system when required must be in **a separate concrete envelope from all other utilities**. Other utilities must maintain clearances as outlined in the NESC.

5.0 Permits

In general, all applicable permits necessary to trench and excavate, including street openings and wetland permits, shall be obtained by the *Customer* and made available upon request if necessary. The *Customer* shall be responsible for including these padmount and conduit/trench specifications with the wetlands application for developments located in or near wetlands. A copy of the wetlands permit may be requested by the *Company* prior to acceptance of the conduit/trench system by the *Company*.

The excavator doing the excavation shall obtain the required DIGSAFE permits before any excavation may take place in a public way. The *Customer/Company* doing the excavation is urged to obtain copies of the applicable statute and become familiar with its requirements. Similarly, the Customer/ Company shall determine if the municipality in which the excavation is to be done requires that water, sewer or other utility, municipal or private, be contacted separately.

The *Customer* shall certify to the *Company* that areas in which the *Company* is to perform installation or maintenance work is free of preexisting contamination by hazardous wastes or materials and to indemnify the *Company* for any claims, costs, expensed, suits, demands, citations, fines or damages of any kind arising from the presence of any such contamination.

6.0 Easements

As a condition of service, the Applicant or *Customer* must provide the *Company* with an easement(s), properly executed by all owners of record drafted by the *Company*, for all Company owned facilities located on private property (to include User or Private Roads (NY) and Private Ways (MA, NH, RI)), whether or not such private property is owned by the *Customer*. The Applicant or *Customer* will provide such easement(s) prior to the start of the *Company's* construction and at no cost to the *Company*. The Applicant or *Customer* shall provide a copy of its mortgage and deed, together with a copy of the survey and/or plan of record, for the Company's use in preparation of the easement(s) as well as any other documents necessary for the Company to prepare such easement(s).

Rights-of-Way, Easements

In UCD, URD, or multiple occupancy building applications, the Customer shall provide the Company with two copies of the approved development map, certified as final by a design professional or licensed land surveyor, which the plan shall have been recorded or filed with the Registry of Deeds. The map shall indicate lot lines, building setback lines, grade lines, sidewalk, roadway, sewer, water, drainage, and

other facilities. The map shall also include the identification and, where appropriate, delineation of sensitive environmental resources including, but not limited to, wetlands, streams, archaeologically sensitive areas, and hazardous waste disposal areas, etc. In addition to this base information, this map shall clearly indicate the easement strips dedicated to the Company and the location of the lots (units) for which electric service is requested. The governmental authority having control over land use shall approve this map. In addition, when electronic maps are used, the Customer must consult the Company for submittal.

Rights-of-way and easements must be cleared of any obstructions at no charge to the Company. The applicant shall grade the right-of-way or easement to within six inches (150 mm) of final grade before the Company commences construction. The applicant must maintain the Company's clearance and grading requirements.

Easement application forms are located on pages 49 and 51.

7.0 Responsibility and Ownership

The division of ownership and responsibility shall be as outlined below by state. Typical installation specifications to reflect installation practices are shown in the back of this guide.

Massachusetts and Rhode Island

The *Company* will:

Supply, install, own and maintain:

primary cable, CT and PT's, Transformer and Meter.

*Note: *company* will not install CT's in CT cabinet.

Check the final torque connections to the transformer's secondary bushings.

Own and maintain:

Primary conduit system (installed by *Customer*).

Secondary cable installed by the customer from transformer to secondary splice box, where required.

The *Customer* will:

Install, own and maintain:

transformer pad, reinforcement and grounding, oil containment where required by the *Company* or local authority, transformer mechanical protection, secondary equipment (including a secondary splice box if required), connect secondary connectors for the transformer, self contained meter box where required by the *Company*.

Supply and install to *Company's* specification:

all primary conduits including concrete encasement, steel riser including 90 degree sweep and bonding clamp with tap, secondary cable from transformer to splice box if required. make up secondary cable ends, including final toque of the secondary cable to the transformer.

Note: The *Customer* will be held accountable for any transformer damage occurring due to improper secondary installation.

New Hampshire

The *Company* will:

Supply, install, own and maintain:

Transformer

CT and PT's and

Meter

* Note: *company* will not install CT's in CT cabinet.

Check the final torque connections to the transformer's secondary bushings.

Own and maintain:

Secondary cable installed by the *customer* from transformer to splice box where required.

The *Customer* will:

Install, own and maintain:

Primary cable and conduit system,

transformer pad, reinforcement and grounding,

oil containment where required by the *Company* or local authority,

transformer mechanical protection, steel riser including 90 degree sweep and bonding clamp with tap.

all secondary equipment (including a secondary splice box if required),

connect secondary connectors for the transformer,

self contained meter box where required by the *Company*.

Supply and install to *Company's* specification:

secondary cable from transformer to splice box if required.

make up secondary cable ends, including final toque of the secondary cable to the transformer.

Note: The *Customer* will be held accountable for any transformer damage occurring due to improper secondary installation.

New York

The *Company* will:

Supply, install, own and maintain:

primary cable,

transformer and

Meter.

Supply and maintain

CT and PT's

Check the final torque connections to the transformer's secondary bushings.

The *Customer* will

Install, own and maintain:

primary conduit and concrete encasement when required,

transformer pad, reinforcement and grounding,

oil containment where required by the *Company* or local authority,

transformer mechanical protection,

all secondary equipment (including a secondary splice box if required),

connect secondary connectors for the transformer,

self contained meter box where required by the *Company*,

steel riser including 90 degree sweep and bonding clamp with tap.

Supply to *Company's* specification when required:

open trench

Install to *Company's* specification when required:

CT's and PT's

make up secondary cable ends, including final toque of the secondary cable to the transformer.

Note: The *Customer* will be held accountable for any transformer damage occurring due to improper secondary installation.

8.0 Transformer Clearance From a Building

Oil insulated equipment shall be located in compliance with the minimum clearances indicated below. For existing buildings, the transformer shall not block access to existing building systems, such as wall mounted fire sprinkler systems. The building owner's and/or tenants fire insurance carrier or local inspection authority may restrict the proximity of the equipment to doors, windows or combustible materials. It is the customer/developer's responsibility to determine the acceptability of the proposed location of the equipment.

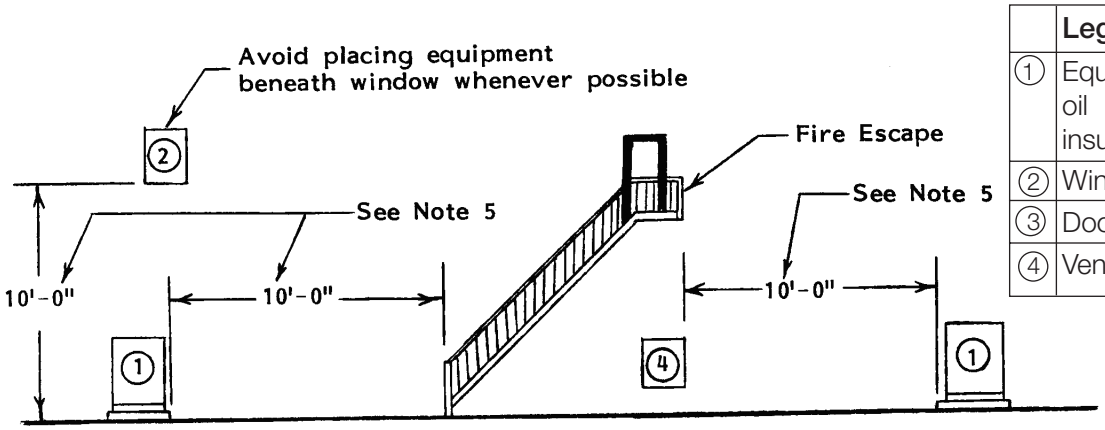

	Legend
1	Equipment, oil insulated
2	Window
3	Door
4	Ventilating Duct

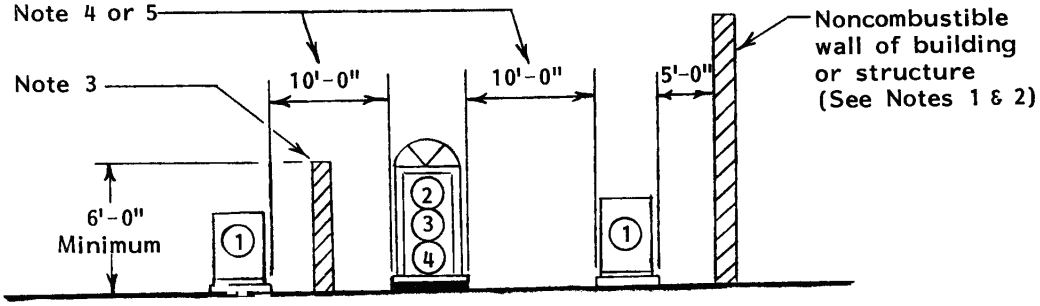

Notes:

1. Noncombustible material is defined as a material that will not ignite, burn, support combustion or release flammable vapors, when subjected to fire or heat, or as described by the latest edition of the NFPA-220.
2. No portion of a building or building structure shall overhang any part of the pad-mounted equipment.
3. In cases where required distances cannot be met, a noncombustible barrier, 6 foot minimum height, shall be constructed. This barrier shall be designed to provide adequate fire protection to the existing structure. A design for this structure shall be prepared and sealed by the customer's Professional Engineer or Registered Architect and shall further be approved by the local authority having jurisdiction of building code enforcement.
4. For exits from a public assembly room, such as an auditorium, a 10 foot minimum clearance should be increased to 25 feet, unless there is a barrier.
5. This requirement may vary between individual states. Refer to the building code regulations for the state involved.

9.0 Transformer Clearance From Objects

Clearances from objects:

A. An area measuring 10 feet from any point of the transformer pad shall be kept free of all:

- buried water lines, storm drainage lines, gas lines, other electric lines;
- underground fuel storage tanks; and
- above grade fire hydrants, cell towers, self contained diesel or diesel byproduct fueled generators, and outdoor enclosed generators.

Note: The 10 ft. clearance may be reduced with a noncombustible barrier (see Note 3) and shall not be less than five (5) feet from the edge of the transformer pad. The *Customer* or their authorized representative shall obtain this clearance reduction approval from the *Company* and the local AHJ(Authority Having Jurisdiction), as necessary, prior to the noncombustible barrier installation.

B. An area measuring 25 feet from any point of the transformer pad shall be kept free of all:

- exposed water lines, gas piping, sewer lines;
- open conductor electric lines; and
- above grade gas meters or regulator vents, fuel storage tanks or dispensing units, and non-enclosed gasoline/ propane / LP or LNG gas fueled generators.
- chemical storage silos / tanks.

Note: The 25 ft. clearance may be reduced to 10 ft. with a noncombustible barrier (see Note 3) and shall not be less than five (5) feet from the edge of the transformer pad. The *Customer* or their authorized representative shall obtain this clearance reduction approval from the *Company* and the local AHJ(Authority Having Jurisdiction), as necessary, prior to the noncombustible barrier installation.

10.0 Transformer Accessibility

Equipment shall be located within 10 feet of a way open to vehicular traffic and a minimum distance from any structure such as poles, fences, etc. as a means to permit accessibility for installation and maintenance. A minimum of 10 feet of clear space shall be maintained in front of the equipment doors to permit installation and removal of separable connectors and fuses with shotgun stick.

11.0 Transformer Mechanical Protection/Bollards

Whenever possible, equipment should be located so it is not subject to vehicular damage. If this is not feasible, adequate guards such as concrete filled pipes (Bollards) shall be placed to protect the equipment.

Bollards shall consist of 6 inch minimum diameter hot dip galvanized or painted steel pipes filled with concrete. When Bollards can not be painted at the time of installation, painted covers shall be installed. Page 56 shows manufacturer. Bollards are to be 5 feet above the ground and a minimum of 4 feet below the ground. Bollards to be set in a concrete footing as shown in detail below. Concrete is to be crowned on top of all bollards. Bollards shall be installed with due care to avoid interfering with ground grid and conduits. Refer to Pages 37 thru 40 for Transformer Pad dimensions. For switchgear locations, see pages 34 and 35.

The number, type (galvanized or steel) and locations of bollards shall be determined by Distribution Design/Planning, taking into account proximity to traffic and to buildings as well as other barriers to traffic. Other factors such as salt spray and fertilizers may impact type of bollard required. Suggested bollard locations and dimensions are shown below. The location of bollards shall not impede a door opening of 100 degrees.

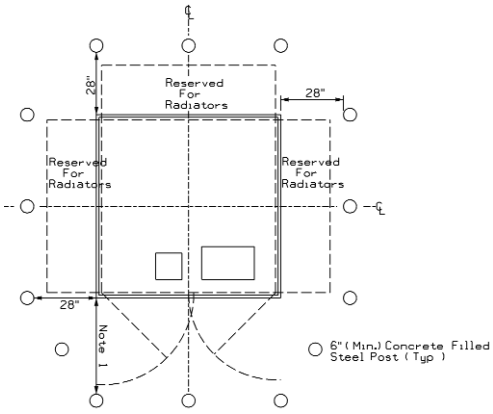

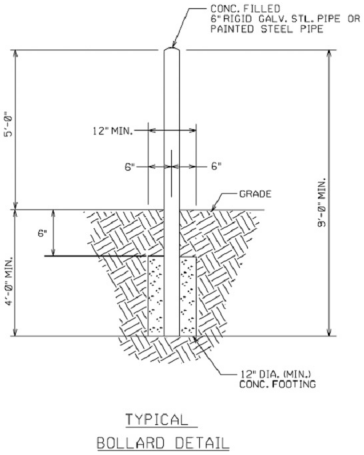

Blow up drawing detailing this is located on page 44

Bollards Required	●
Bollards Not Required	ⓧ

Picture of Bollard cover, use for when Bollards can not be painted.

Notes:

1. *Six foot minimum clearance from front of pad.*
2. *Distribution Design/Planning shall designate the number and location of Bollards by marking the Bollards of this drawing as follows:*
3. *Bollards shall be supported with a 12" minimum diameter concrete footing 6" below grade to base of the bollard.*
4. *For installations around oil containment curbs, install bollards six feet minimum on all applicable sides.*

12.0 Transformer pad

The *Customer* shall provide and install a concrete transformer foundation in accordance with the *Company* standards. Precast concrete transformer foundations built to *Company* standards are available from a variety of vendors listed on page 53. Spec sheets of the different size pads are shown on pages 37 thru 40.

Cast in place pads shall meet the following specifications. Concrete shall be a Mix M-4 detailed specifications are on pages 45 thru 48. Reinforcing in pad shall be # 5 grade 60 bars and shall conform to ASTM STANDARD A 615 of latest date. Reinforcing rods are to be located in center of the slab, with a minimum of 2 inches of clearance from face of concrete. All transformer pads must have and adequate base of 2 inches of sand and 12 inches of gravel as shown on pages 37 thru 40. The gravel shall be thoroughly compacted and the sand thoroughly wetted immediately before placing the concrete.

Massachusetts, New Hampshire and Rhode Island

The location of the concrete transformer pad, on the *Customer* premises, shall be approved by the *Company* in advance of the construction. The *Company* must, with sufficient notification (24 hours minimum) from the *Customer*, inspect the forming and reinforcing of the pad, the sub grade preparation, and the ground grid **prior** to the pouring of concrete. This requirement is critical. Failure to have inspection done may result in the need to remove and rebuild the concrete foundation

New York

The location of the concrete transformer pad, on the *Customer* premises, shall be approved by the *Company* in advance of the construction.

13.0 Transformer Secondary

Size and number of secondary cables shall be in accordance with the NEC and shall be approved by the electrical inspector or AHJ of the town or city involved. Maximum number of secondary cables to be physically connected to the Company's pad-mounted transformer is outlined below:

4 Hole Spades	6 sets 750 kcmil Max.
6 Hole Spades	8 sets 750 kcmil Max.
10 Hole Spades	10 sets 600 kcmil or 8 sets of 750 kcmil

Secondary cable requirements greater than this, will require a separate compartment, handhole, or bus duct.

Secondary cable shall not be installed until pad mount transformer has been set to ensure adequate length of secondary cable and connections.

All acceptable spade terminals are shown in Figures 1, 2 and 3. Minimum terminal thickness is to be ¼ inch, with 9/16 inch holes.

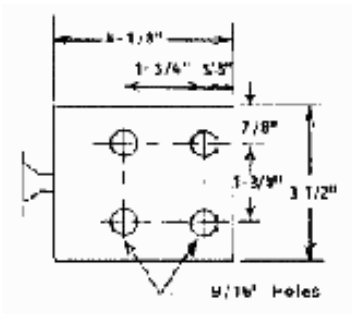

Figure 1

kVA Rating	L.V. Rating
75 – 300	208Y/120
75 – 500	480Y/277

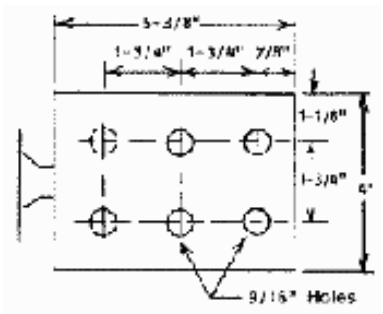

Figure 2

kVA Rating	L.V. Rating
500	208Y/120
750 – 1500	480Y/277

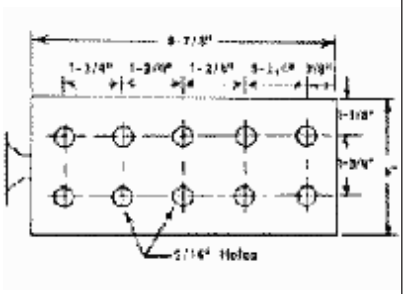

Figure 3

kVA Rating	L.V. Rating
750 – 1000	208Y/120
2000 – 2500	480Y/277

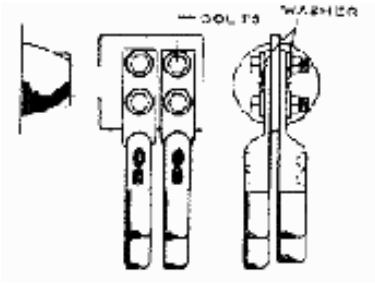

Figure 4
4 Cables – 500 kcmil & Below

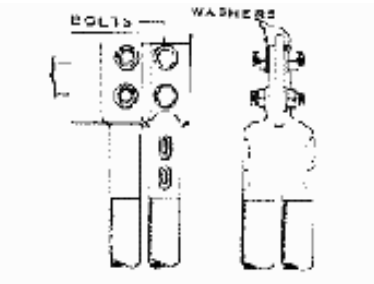

Figure 5

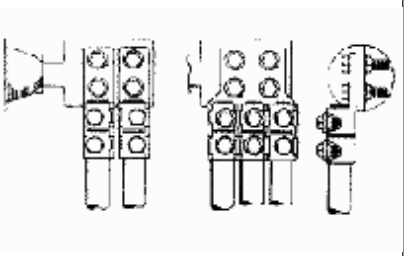

Figure 6

Notes:

1. *Figure 4 – Compression connections will accommodate up to four cables with a maximum individual lug width of 1¼ inch.*
2. *Figure 5 – Compression connections will accommodate two cables with lug greater than 1¾ inch width.*
3. *Figure 6 – Typical example of bolted connections for two, four or six cables to maximum capacity of lug.*
4. *Metering (CT's) mounted inside the padmounted transformer may reduce the number of sets of secondary that can be installed by blocking off some holes on the secondary spade. In some cases the customer may be required to purchase a secondary splice box.*
5. *A list of a few manufacturers that supply the connectors is located on page 56.*

13.1 Transformer Secondary Connections

All connectors and connector fasteners shall be furnished, installed, owned and maintained by the customer/developer. Connectors shall be approved by the *Company* prior to purchase. Final electrical connection to the transformer secondary terminals shall be inspected by the *Company*. The customer/developer shall make all final connections to the spades of the pad-mount transformer to a final torque of 40 foot pounds. Size and number of secondary cables shall be in accordance with the NEC and shall be approved by the electrical inspector or AHJ for the town or city involved.

13.2 Secondary Bolt Assembly

The customer/developer shall supply and install aluminum connectors for use with aluminum cable or copper connectors for use with copper cable. Tin plated connectors can also be used as an alternate connector for aluminum and copper connectors. Connector shall be a cable to flat clamp or compression type connector, with a minimum of two holes in the flat pad and two clamping elements or two compressions per cable, and must be approved by *company* representative. Bolts and flat washers shall be grade 304 stainless steel. Belleville washers shall be grade 301 stainless steel. Nuts shall be waxed grade 316 stainless steel.

A. A flat washer is placed between the concave side of the belleville washer and the surface of the member being joined. The belleville is thus captured between the head of the bolt and the large flat washer. The flat washer should have an outside diameter greater than the flattened belleville's such that no overhand results. Select a flat washer that is twice as thick as the belleville for strength. (If not available, stack two or three thinner washers to achieve the same effect).

B. With the belleville washer captured between the flat washer and the bolt head, fit the assembly into its hole. When the washers are fitted in position, there should be no interference with washers of adjacent bolts and no overhang over surface edges.

C. Tighten the nut on the bolt (with a washer of its own) until a sudden, noticeable increase in torque is required to continue. The belleville washer is now flat. It is not necessary to "back off" the nut after tightening to this point.

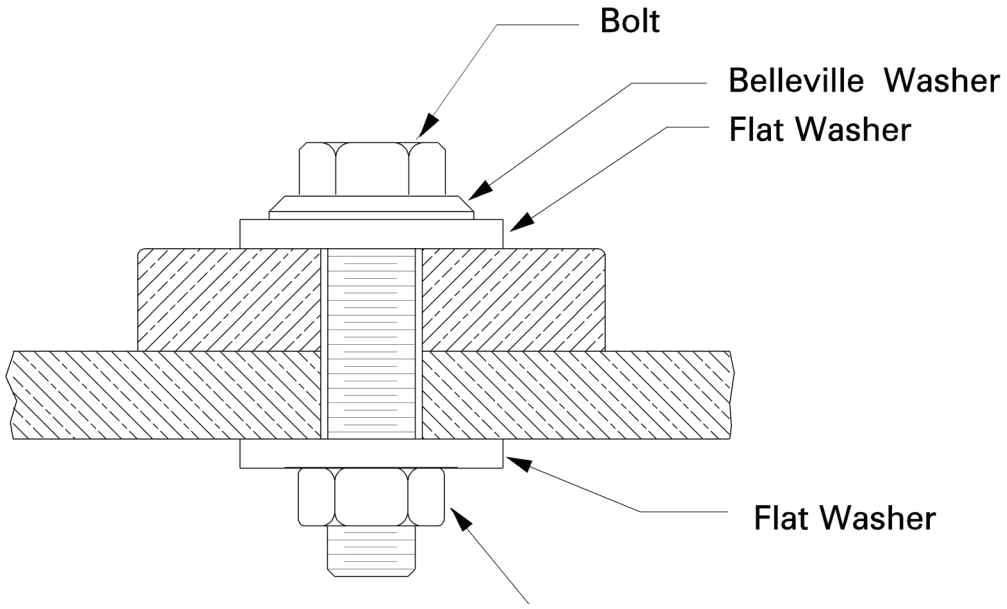

13.3 Secondary Splice Box

A secondary splice box may be required where the customer's number of secondary cables exceeds the maximum allowed amount on the transformer. Supplying and installing this box is the *customer's* responsibility. The cables from the transformer to this box are to be specified by *company's* representative. The *customer* is responsible to supply and install the cables.

Once the service is energized the *company* will take over ownership of only the secondary cables from the transformer to the secondary splice box.

A list of a few manufacturers that supply the secondary splice box is located on page 56.

14.0 Transformer Sweep Entry

Conduit shall be installed as shown on Pages 37 thru 40 before slab is poured. Use 36 inch radius sweeps, with couplings, nipples and bushings as required. Sweeps for primary cables shall be galvanized steel or schedule 40 PVC. Conduits shall be raised a minimum of 1 inch approximately over the concrete slab. Expanding foam Hilti Inc. CF810 shall be used to fill inside the conduits after the primary/secondary is installed. Ownership of cable will determine who installs the foam on each cable. After pulling tape is in, install the expanding foam in any spare/empty conduits. Place a rag into empty conduits prior to the foam as a support for the foam while curing takes place.

After the concrete pad is cured, the remainder of the conduit primary and secondary openings through pad will be sealed with grout. Before sealing steel sweeps, the sweeps must have a bond clamp attached with a #4 Cu tap to connect to the ground grid. Fill the conduit primary and secondary openings with sand (no aggregate) to a grade of approximately 2 inches below the top of the concrete pad. Place a layer of concrete grout (no aggregate) 1 to 2 inches thick on top of the sand layer to seal the conduit entrance. Do not cover the conduit ground clamps with grout. The expanding foam may be used as an alternate for filling in the opening with sand and concrete grout. Ownership of conduits and pad will determine who seals openings. See page 62 for further details in *company* bulletin *09-09 Three Phase Pad-mounted Transformer Sealing*.

Expanding Foam
CF810 available at
Hilti Inc. 1-800-879-8000
Stuart C Irby Co 1-315-453-2970 and 1-315-329-0038

Spare conduits can also be sealed with conduit plugs, see page 54 for a list of manufacturers.

15.0 Transformer Grounding and Bonding

The ground grid shall be 2/0, bare, soft drawn, 19 strand copper wire. The wire shall be installed 12 inches below finished grade and located around the transformer pad as shown on page 17. Bond to all exposed metallic conduit and leave 3 feet of wire above pad for grounding transformer, one lead in the primary conduit window opening and the other lead in the secondary conduit window opening.

Two 5/8 inch diameter, 8 feet long copper weld ground rods and approved connectors shall be installed to 12" below finished grade. Leave the ground rods and grid exposed until inspected the *Company*. The ground grid is to be complete and backfilled prior to energizing the transformer. Connections to ground grid to be made as shown on Details A and B below, except that exothermic welding ("cad weld") shall be an acceptable alternative to a compression connection. Bolted connectors are only acceptable for the ground grid connections to the ground rods. The company will install the ground taps onto the transformer.

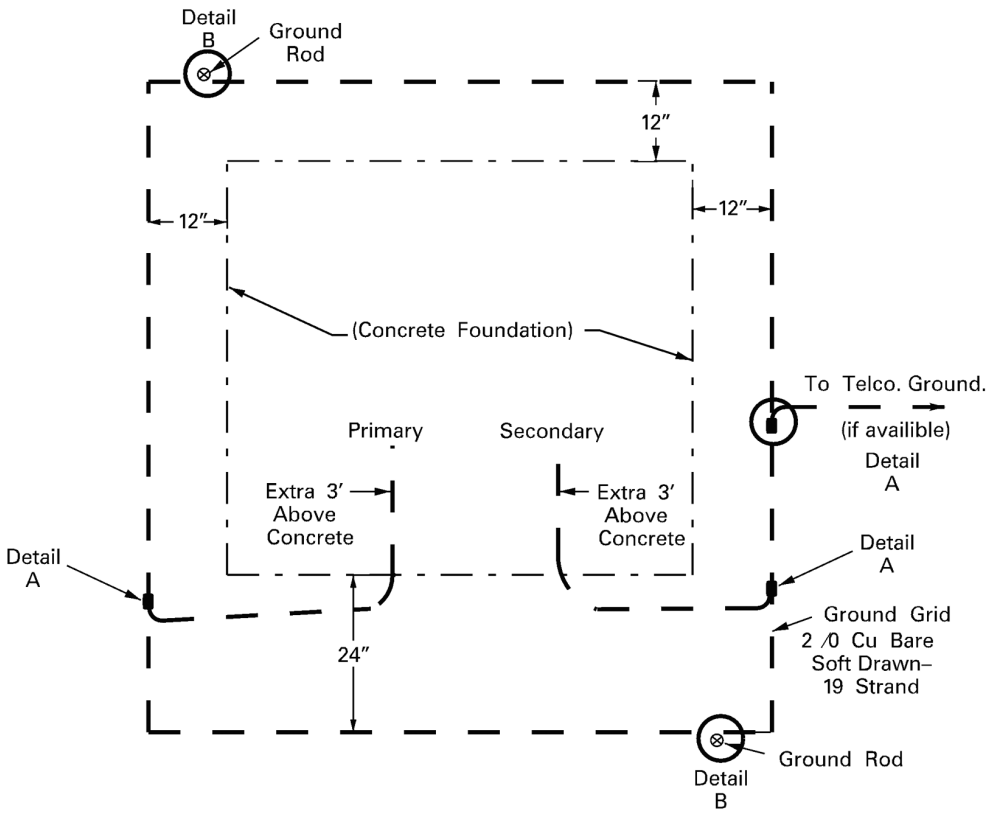

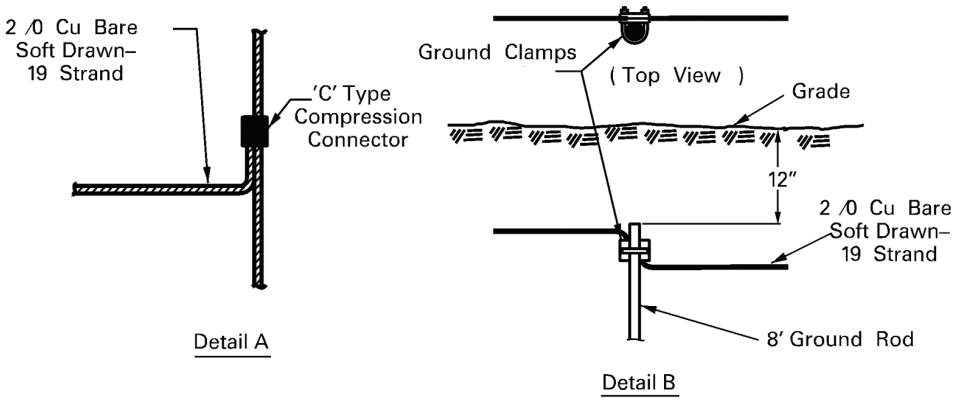

16.0 Oil Containment

This is to be used where oil containment is required by local authorities or where otherwise justified. This liner system will significantly slow the migration of oil into the under laying sub grade, allowing additional time to initiate a cleanup response. The polypropylene geotextile allows the passage of water but absorbs small quantities of oil. This design is intended to confine 100% of total transformer oil present, with a 20% reserve margin, for up to 36 hours. If additional confinement is desired consult the company Environmental Engineer. Follow the following installation steps. See Page 19 for construction detail. A precast containment barrier is available as an alternate to casting one in place, check with the precast suppliers on page 53 for availability. Precast curb can be one piece or made up of separate pieces assembled in the field.

Note: *on field assembled pieces. All pieced must be sealed together with rope tar, rubber sealant or equivalent.*

1) Build oil curb, this should be installed with concrete in accordance with Mix #4 per concrete specifications on pages 45 thru 48. Reinforcement to be #4, grade 60 rods minimum, 6 inches on center, bend rods around corners. Curb to be 24” deep with a minimum thickness of 6”.
2) Install geotextile liner from top of walls and around bottom of containment area. Areas where conduit crosses overlap liner around conduit and seal with expanding foam.
3) Install 6” of silty sand on top of liner.
4) Install second layer of geotextile liner as noted in step 2.
5) Build up area for transformer pad with 6” of compacted gravel and level.
6) Install ground grid.
7) Set/build transformer pad.
8) Fill in conduit openings with silty sand or expanding foam up to the last two inches of the pad
9) Fill rest of conduit opening with concrete grout or expanding foam.
10) Fill area between slab and curb with 1½ inches uniformly graded crushed rock.

Geo-textile Liner

Generic name is: 16oz polypropylene geotextile also called filter fabric weighing 16oz/sqare yard.

Brand names/Suppliers are:

AME1680 available from American Engineering Fabrics (AEF), Inc.
(Emphasize polypropylene not polyester)
New Bedford, MA@1-617-965-0007/1-800-770-2666 or from
Vellano Bros. Lancaster NY 1-716-684-7222, several other locations in
NY, MA, RI and NH, go to www.vellano.com

Synthetic Industries ST 160 available from Spartan Mills Inc’s, Spartanburg, NC
1-803-576-2353

Carthage Mills FX-160HS / US Construction Fabrics LLC 90 Range Rd, Windham NH 03087
1-603-898-0532

Containment Area Plan View

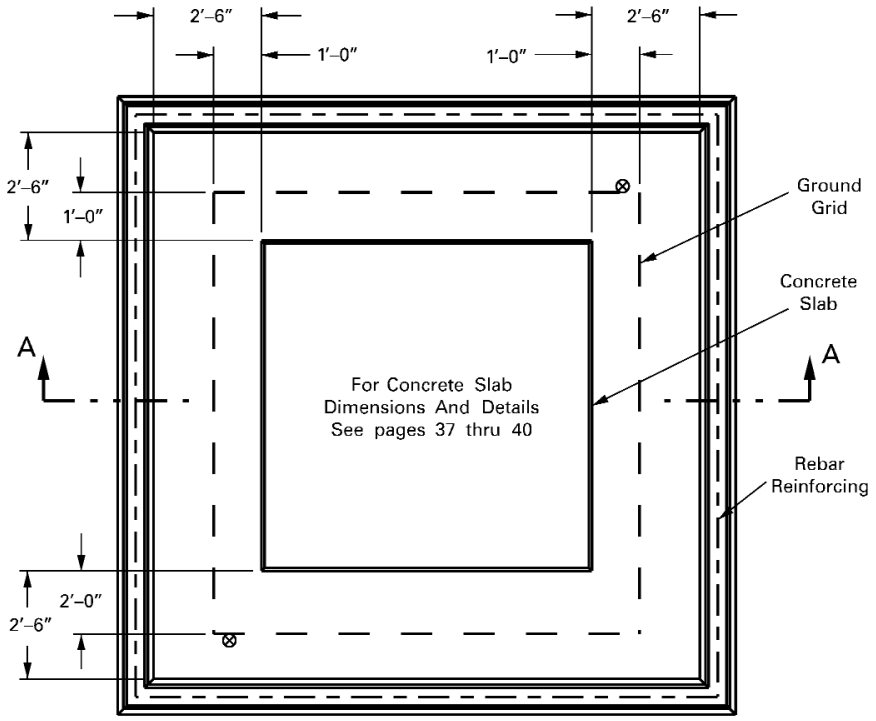

Typical Cross Section of Containment Pad A-A

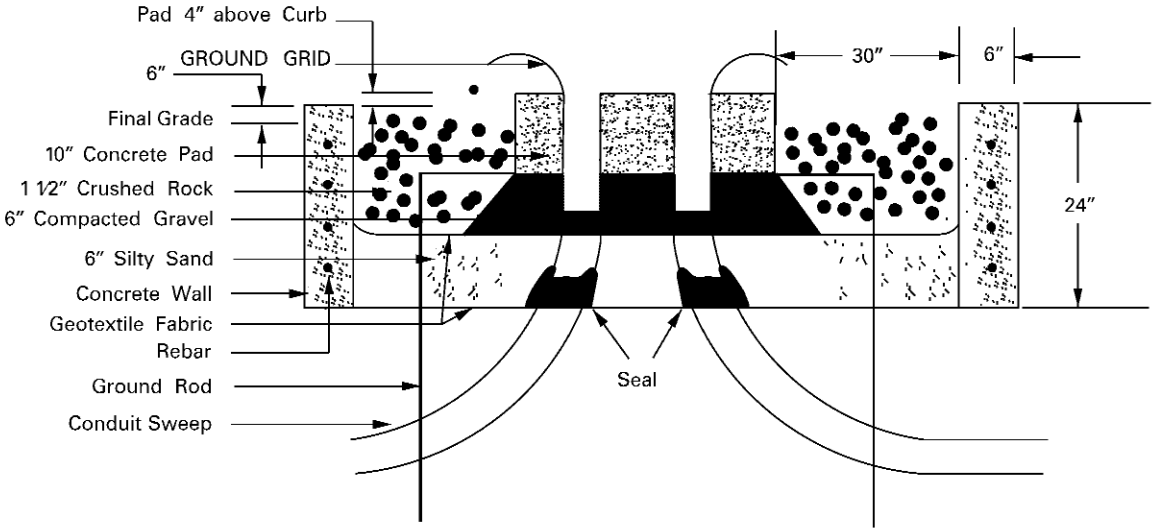

17.0 Riser Pole

The *Company* shall designate conduit riser locations on the pole. All primary risers shall be Galvanized Steel, this includes the 90 degree sweep. Per NESC all steel risers must be bonded 6” down from top of riser and the bond must be at least 8’ high from finished grade.

The *Customer* is responsible for providing and installing the bond clamps and the tap. The *Company* will make the bond connection from that riser bond tap to the ground system on the pole. Spare riser sweep shall be bonded also. Riser sweep in Direct Buried applications shall be concrete encased. Approved materials reference is located on page 54.

NOTE #1 U-Guard

NOTE #2 Galvanized steel conduit and bend are to be used, they shall be grounded by bonding to an approved U-bolt type ground clamp 6" (150 mm) from top of the conduit. A 24" (600 mm) conductor shall be provided to extend to the Company's grounding conductor. The conductor shall be sized as required by the National Electrical Code. Article 250, but in no case shall it be smaller than #4 AWG copper. Recommend use of corrosion resistant bend in locations subject to highway salting.

NOTE #3 Galvanized steel conduit, galvanized steel sweep, attachment clamps, grounding clamp and 24" grounding conductor shall be furnished and installed by Customer. Normally, the conduit shall rise on the side of the pole away from traffic up to 8 ft. (2.5 m) to 11 ft. (3.4 m). Consult company for proper location on pole.

NOTE #4 Pipe straps, install at not more than 30" (750 mm) intervals.

NOTE #5 The conduit burial depth shall be 30" (750 mm) minimum.

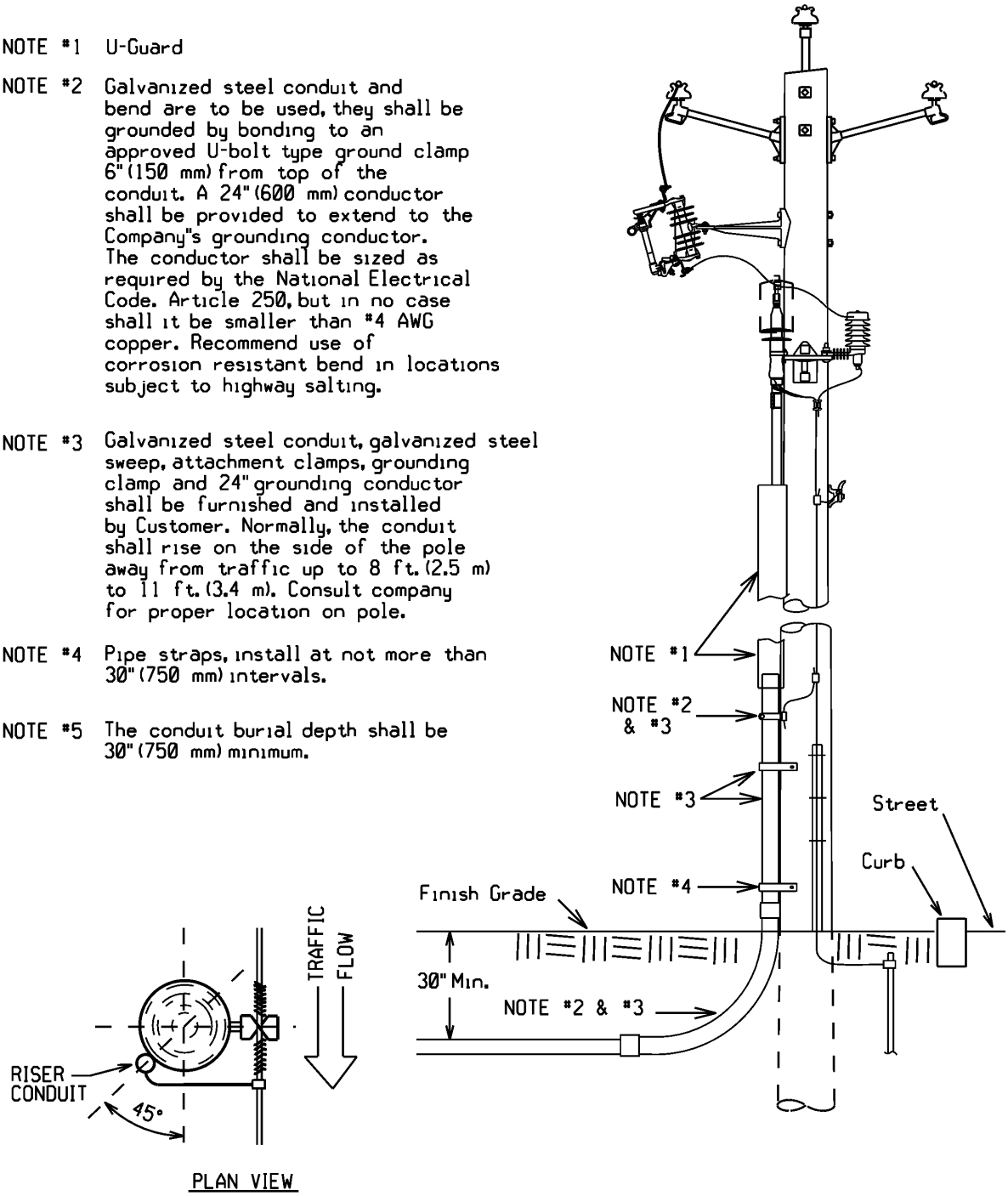

18.0 Heavy Duty Handhole

This primary conduit handhole may be specified in the design for installation in roadways or sidewalks areas where duct length requires extra pulling locations. Heavy duty handholes are supplied and installed by the *Customer*.

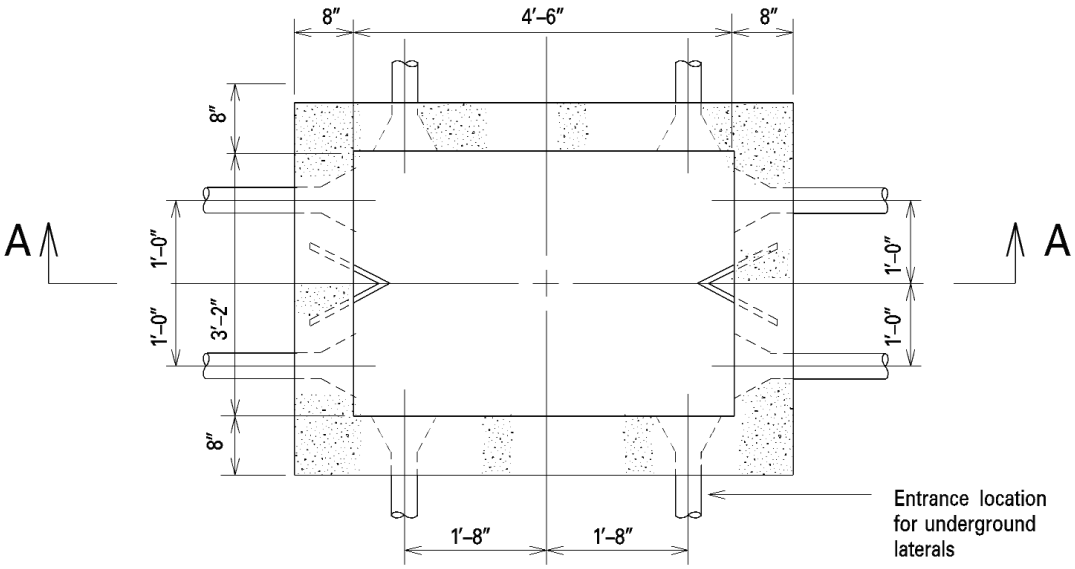

PLAN VIEW

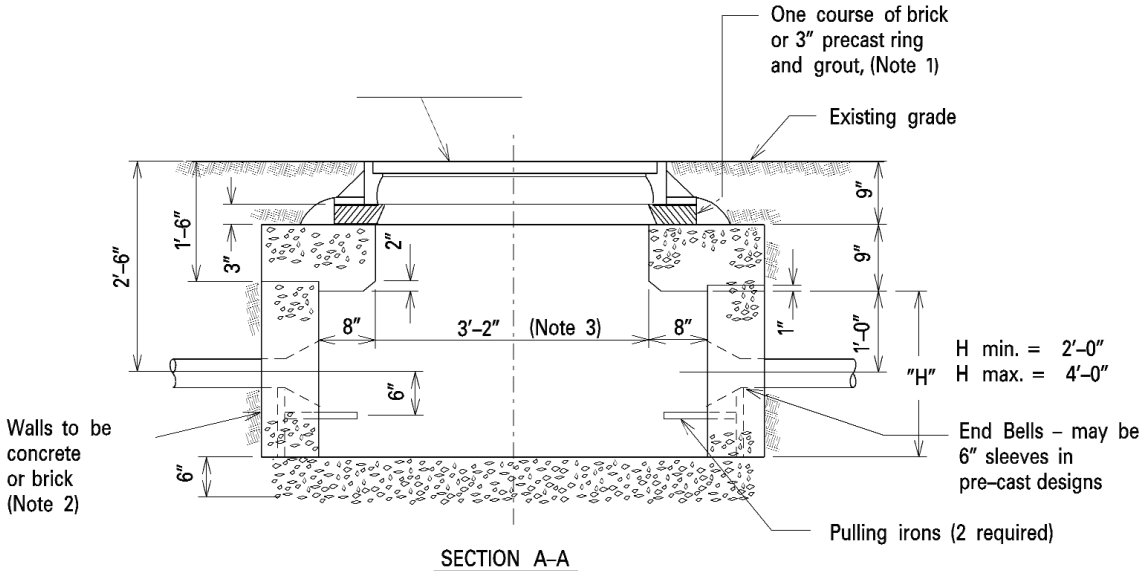

SECTION A–A

Notes:

1. *Chimney height is kept to a minimum to facilitate placing completed splices in handhole from above grade.*
2. *Concrete minimum strength - See pages 45 thru 48.*
3. *Roof opening 3' 2" inches x 3' 2".*
4. *Handhole frame, ring and cover are typically provided by the customer.*

19.0 Primary Cable Pull/Splice Box

This primary conduit Pull/Splice Box may be specified in the design for installation in sidewalks or grass plot areas where duct length or design requires extra pulling locations or splices. The splice box is H20 rated and shall be installed in locations not frequently traveled over by vehicles. Pull/splice boxes are supplied and installed by the *customer*.

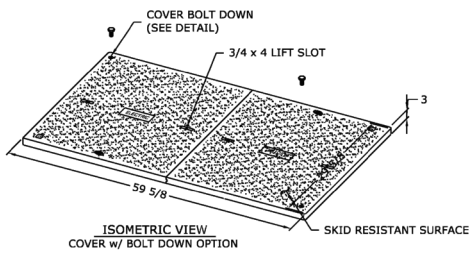

ISOMETRIC VIEW
COVER w/ BOLT DOWN OPTION

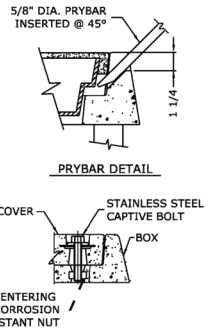

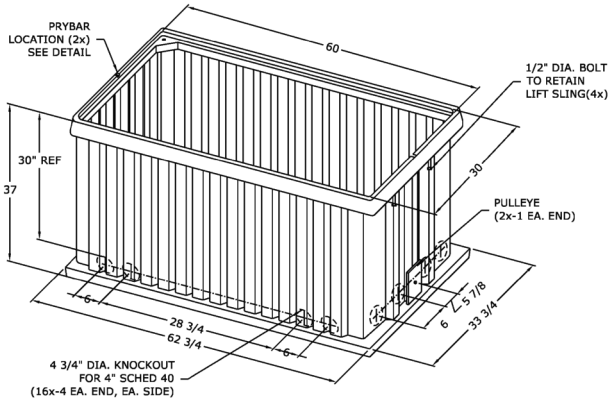

ISOMETRIC VIEW
BOX

- MATERIAL: FIBERGLASS REINFORCED POLYMER CONCRETE & FIBERGLASS REINFORCED POLYMER
- COLOR: CONCRETE GRAY
- LOAD RATING: A16(ASTM C857)
- LOGO: ELECTRIC
- COVER WEIGHT: 215 LBS
- BOX WEIGHT: 263 LBS
- COVER & BOX TOAL WEIGHT: 478 LBS

CDR
PA12-30-60-37-0016

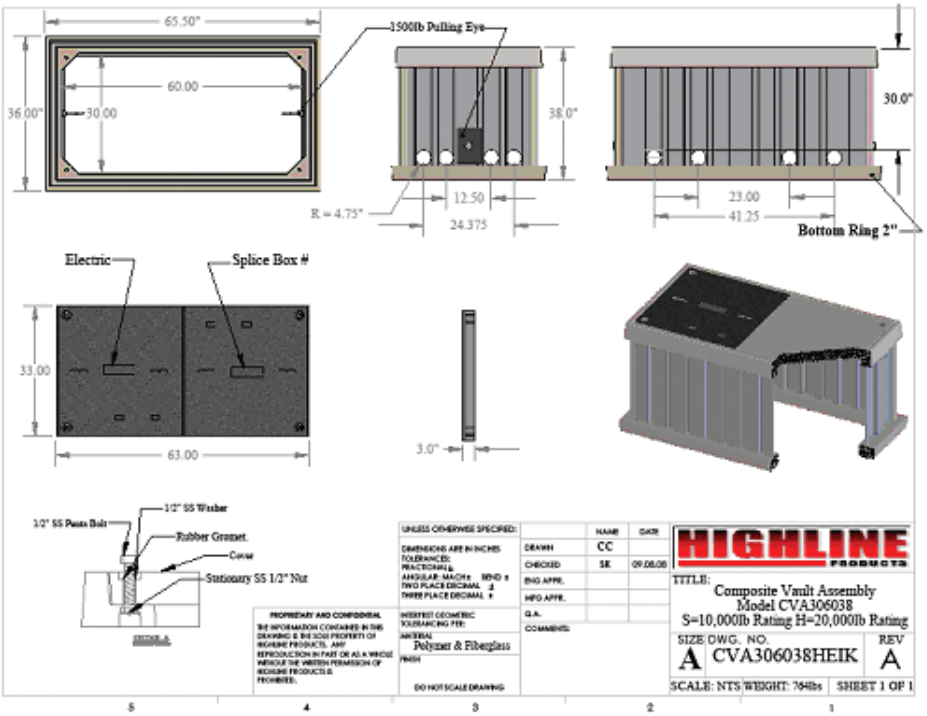

20.0 Trench Requirements

Final grades shall be established; the surface rough graded with in 6” from finished grade, roadway and property boundaries shall be staked or marked by the *Customer* before any trenching is started. Trench spoils shall be kept a distance of 2’ minimum from excavated trench.

The *Customer* shall adhere to the construction plan and specifications specifying trench locations, trench depth and concrete encasement. Any deviation shall be subject to approval by the *Company*.

The *Company* shall be notified in advance of the backfilling of any electric facility (e.g. concrete, conduit, manholes, riser bends). The *Company* reserves the right to require re-excavation of the conduits and foundations if the *Customer* fails to have inspection done or backfills before inspection.

Trenches shall not be backfilled until concrete has set (for at least two hours) and until after approval by authorized *Company* personnel. *Note: if trench is subjected to traffic then the trench shall set for at least 12 hours.* All backfill shall be sand or gravel containing stones less than 1" in any dimension. Backfilling shall not take place over any open-ended (unplugged) conduits. *Company* approved red “Warning” tape shall be installed directly above the *Company’*s cable eight to twelve inches below finished grade. Laying the warning tape directly on the cable, concrete or conduit is not acceptable. Certain installations in the public way may require flowable fill instead in place of normal backfill.

20.1 Trench Depth New York/New England Concrete Encased Conduit

Burial depths for electrical conduit shall be maintained not less than 30" from the top of the concrete encasement to grade during all phases of construction. The trench bottom shall be solid, undisturbed earth. Earth showing signs of peat, cinders, rubble, or any conditions not suitable for a stable foundation shall be reported to the *Company* for recommendation. Small pockets of unsuitable soil shall be replaced with compacted gravel (max. 2" stone). At riser pole end concrete encasement just before riser sweep.

20.2 Trench Depth Conduit Direct Buried New York (under certain circumstances agreeable with the *company*)

Burial depths for electrical conduit shall be maintained not less than 30" from the top of the conduit to grade during all phases of construction. The trench bottom shall be solid, undisturbed earth. Earth showing signs of peat, cinders, rubble, or any conditions not suitable for a stable foundation shall be reported to the *Company* for recommendation. Small pockets of unsuitable soil shall be replaced with compacted gravel (max. 2" stone).

20.3 Trench Depth Direct Buried New York

Burial depths for electrical cable shall be maintained not less than 30” to grade during all phases of construction. The trench bottom shall be solid, undisturbed earth. Earth showing signs of peat, cinders, rubble, or any conditions not suitable for a stable foundation shall be reported to the *Company* for recommendation. Small pockets of unsuitable soil shall be replaced with compacted gravel (max. 2" stone). Then 2” minimum of sand shall be the base to lay the cable on top of with another 4” minimum of sand to cover cable.

Figure 20.0-1 Typical Trenches

Conduit Trench

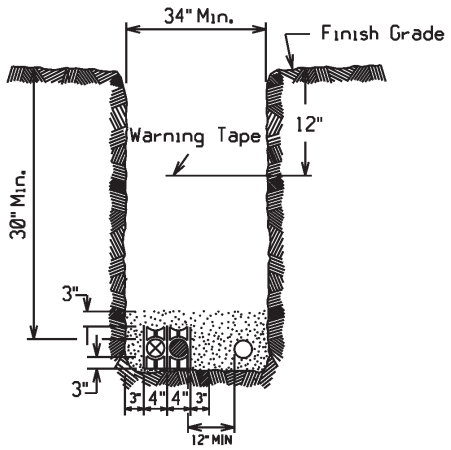

Conduit in Concrete Trench

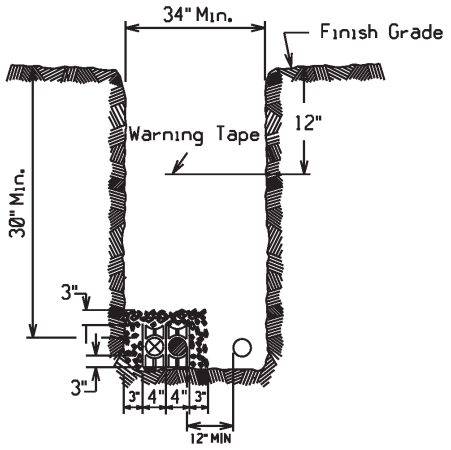

Direct Burial Trench

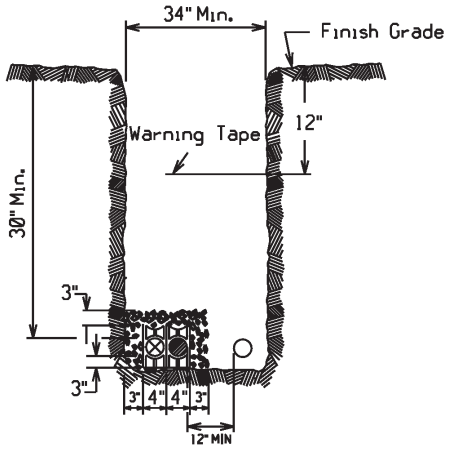

Notes:

1) If more than one set of primary is installed in the trench, separate primary by 6” minimum.
2) Nantucket MA area to use this trench with a spare 4” conduit to be installed at least 6” away from the direct burial cable.

Legend

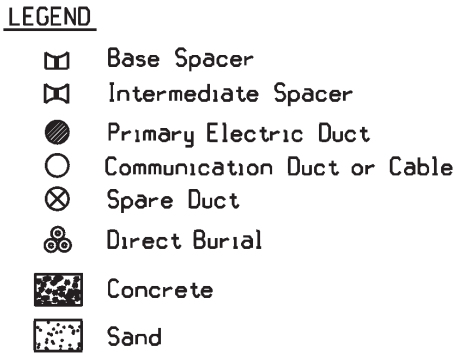

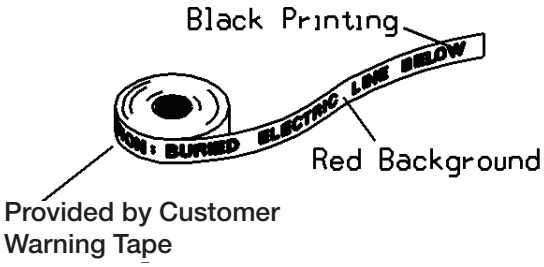

21.0 Conduit Requirements

The *Customer* shall be responsible for all trenching, excavating, backfilling, and installation of the primary duct system. Exceptions to this shall be in areas where there is an existing manhole and duct system and the limits of trenching by the *Customer* shall be determined by the *Company*. The *Customer* is also responsible to supply and install any necessary manhole, pullboxes, heavy duty handholes, frames and covers. Concrete encasement shall be provided and installed by the *Customer* as specified by the *Company*.

The *Customer* shall ascertain the requirements of the specific municipality in which the development is located. For example, some municipalities may require that the *Customer* employ a licensed electrician to direct the installation of all conduit intended for electric facilities.

Temporary mechanical protection over buried conduit and encasements is recommended to prevent crushing or damage during construction. This is the *Customer's* responsibility.

All road crossings shall, when practical, be perpendicular to the sidelines of the road.

The minimum size conduit shall be 4" schedule 60 DB. All sweeps at foundations and risers shall have a minimum radius of thirty-six inches (36"). The riser sweep shall be galvanized steel. The padmount transformer sweeps shall be galvanized rigid steel or schedule 40 - PVC, with the transformer sweeps rising typically 1" above the concrete pad. The *customer* shall install bell ends on the conduits. The *Customer* shall install conduit plugs in all unused conduits and pulling tape. At the riser pole, the galvanized rigid steel sweeps and the PVC/steel adaptors shall not be concrete encased. The *Customer* shall be responsible to install rigid galvanized steel straight conduit up the pole as shown on page 20, including conduit ground straps, up the riser pole (unless directed otherwise by the *Company*). The *Company* will specify on which quarter of the pole the riser shall be installed, usually away from oncoming traffic.

Except as noted on construction prints, curves and bends in conduit shall be gradual, and the radius of curvature shall not be less than forty feet. All curves shall be formed with 5-degree couplings. The minimum length between single, 5-degree couplings is 42". Heat bending is not allowed.

Conduit grade shall be such as to cause all ducts to drain toward one or both equipment foundations or pullboxes. Minimum pitch shall be three inches (3") per one hundred feet (100').

The *Customer* shall insure that clearances are met and maintained, and that they are inspected by the *Company*. Unless local jurisdictions require greater clearances, the minimum clearances shall be as follows:

Communication Systems – *Company* conduit shall not be directly above or below communication conduit, except when crossing below communication conduit at approximately right angles. *Company* conduit and communication conduit shall be separated by a minimum of 3" of concrete encasement.

Water, Gas, Sewer – *Company* conduit shall not be directly above or below these utilities, except when crossing above these utilities at approximately right angles. Where the paths of these utilities cross under *Company* conduits at approximately right angles, the minimum separation is 12". A minimum separation of 24" shall be maintained between parallel placement of any of these utilities and electrical conduit.

A 6-inch clearance shall be between conduit envelopes and major subsurface pipes (e.g. drainage pipes).

The *Customer* shall mandrel all primary conduits to insure their integrity **before** the *Company* shall attempt to pull any primary cable. The *Customer* shall furnish and install an approved synthetic, 2,500 pound test tape in each primary conduit run including risers. Pulling tape installation and mandrilling the duct shall be witnessed by the *Company*.

***Company* owned duct shall not share a concrete encasement with foreign utilities (e.g. do not place communication or private electrical duct in the same concrete encasement as *Company* duct).**

21.1 Pulling Tape

All conduits shall have a pulling tape, also known as "Mule Tape". This tape is to be to be rated for 2,500#. Manufacturers of this tape are listed on page 54.

21.2 Trench and Conduit System Inspection

In the applicable area, a designated *Company* inspector shall be responsible for the inspection of the trench and or conduit system being prepared and installed by the *Customer*, at stages of installation. The *Customer* shall provide the *Company* inspector with a minimum of 24 to 72 hours notice. Required inspections are:

1) After conduit, ground system, reinforcing bars and forming are completed; but before concrete is poured.

2) After concrete is poured but before backfilling.

3) After backfilling.

The inspection shall not be limited to the above.

22.0 Primary Cable and Electrical Equipment

The majority of installations will have the Company provide, install, and maintain the entire primary electrical system including the transformer, cable, cable accessories, terminations, and other miscellaneous primary electrical system components.

In some areas the *Customer* will (mostly New Hampshire) provide and maintain the entire primary electrical system. The *Company* will provide install and maintain the transformer and other miscellaneous primary electrical system components.

The designation and location of the riser pole(s) shall be determined by the *Company*.

The location of primary cable pull/splice boxes and/or heavy duty handholes shall be determined by the *Company*.

At those locations where manholes or above ground switchgear are required, additional specifications will be provided by the *Company*.

23.0 Secondary Cable and Conduit System

Secondary cables shall be installed underground in customer/developer furnished, installed, owned and maintained conduit system or raceway. Conditions requiring more secondary cables than the *Company*'s transformer secondary terminals can accommodate may require the customer/developer to supply an intermediate splice box to make a transition from National Electrical Code required cable capabilities (required to match main switch), to actual load cable capabilities. Page 56 lists manufacturers of the splice box.

24.0 Metering

Refer to the *Company's* Specifications for Electrical Installations book for the type of installation. Division of work and material will be performed with the approval and authorization of the *Company's* Metering Services Department.

25.0 Manhole

Manhole installation may be required as part of the infrastructure to serve certain customers. The *Customer* shall provide and install the manhole to company specification. On page 53 lists precast concrete providers. Please contact the *company* if details are needed for specifications of manholes.

STD Item UM22

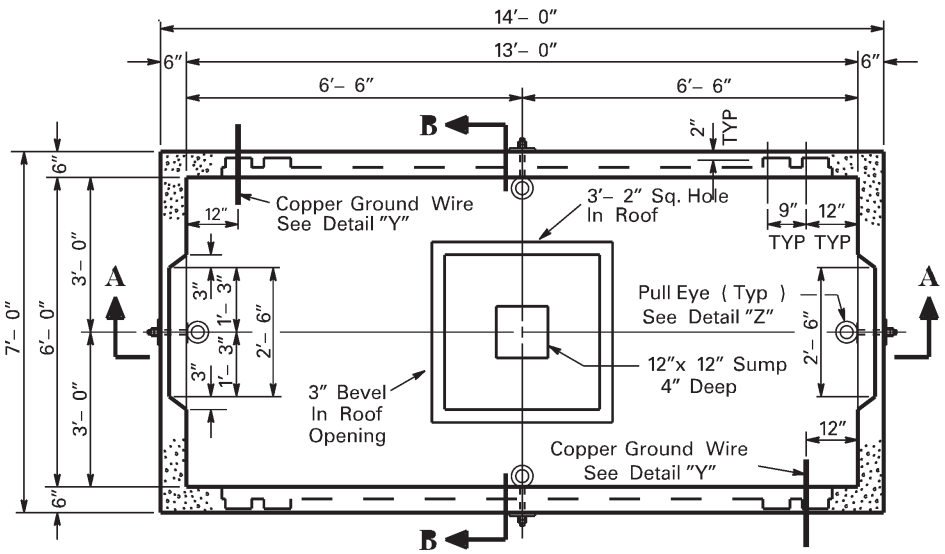

Plan

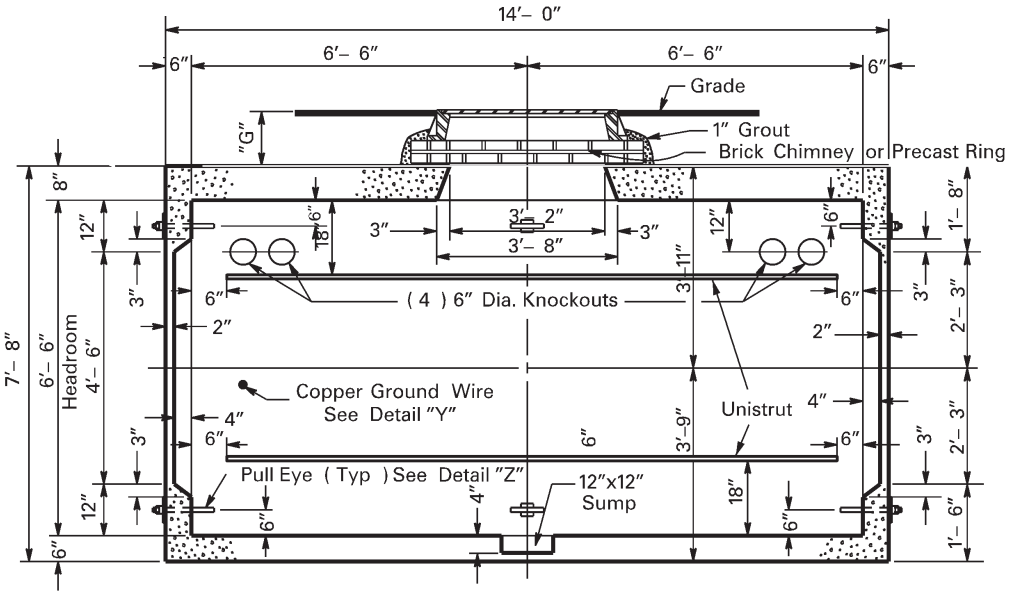

Section A–A

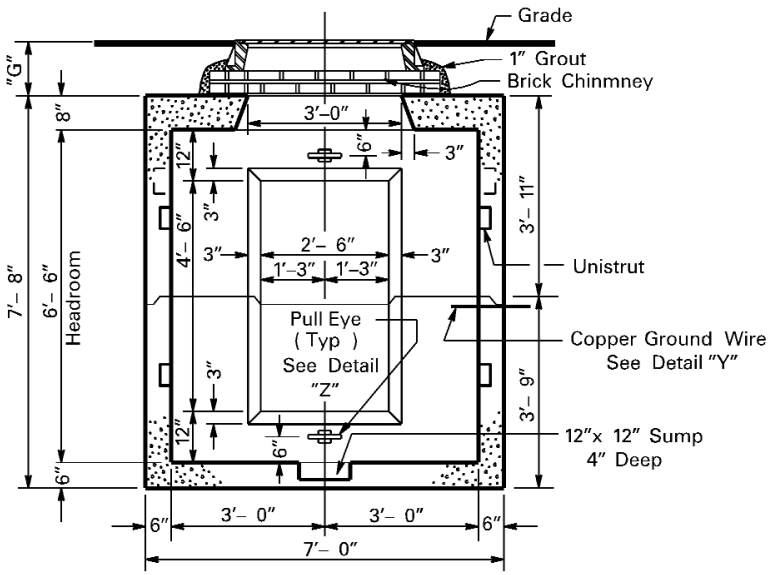

Section B–B

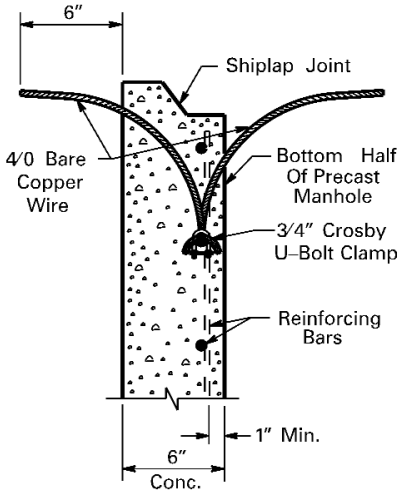

Detail "Y"
2 Required

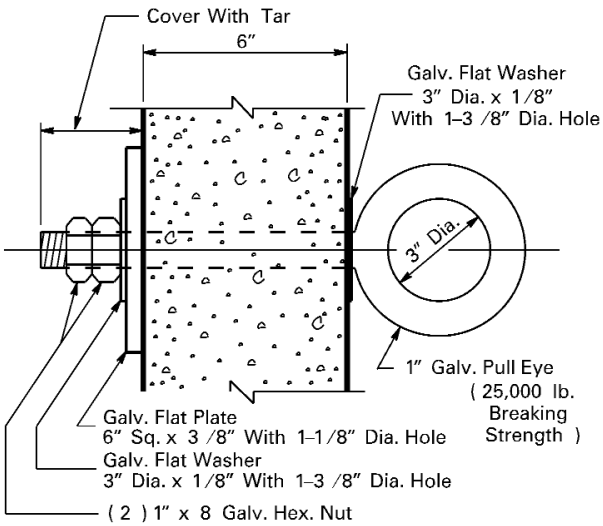

Detail "Z"
4 Required

Note: Construction joint to be sealed with asphalt or equivalent.

25.1 Manhole Frame Ring and Cover

The *customer* shall be responsible for providing and installing the manhole frame ring and cover to finished grade. Approved frame, ring and covers are shown on page 60. Frame shall be installed on a chimney at least 6" in height minimum. The maximum allowable chimney shall be 36" from the top of the roof of the manhole to finished grade.

25.2 Switchgear Manhole

Switchgear installation may be required as part of the infrastructure to serve certain customers. The Customer shall provide and install the switchgear manhole to company specification. On page 57 lists precast concrete providers. The Company shall identify which collar shall be used from the choices on pages 30 and 31.

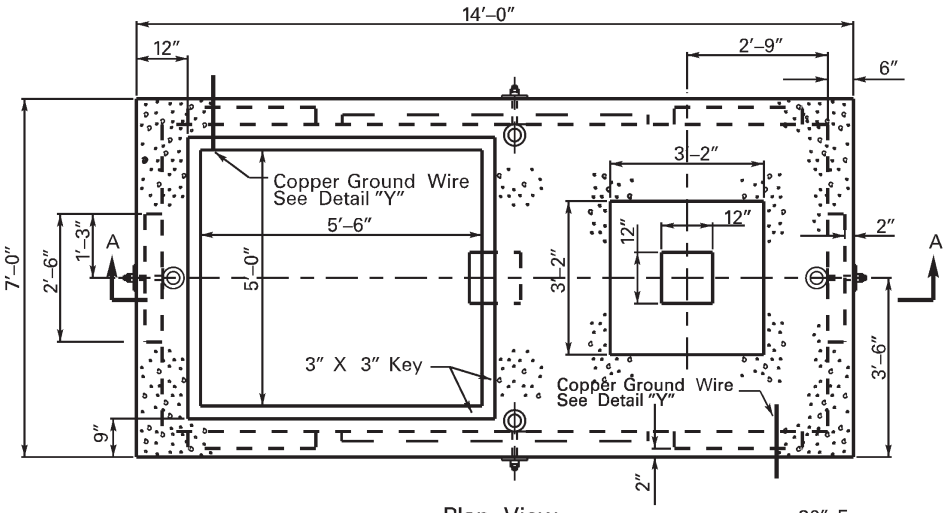

Plan View

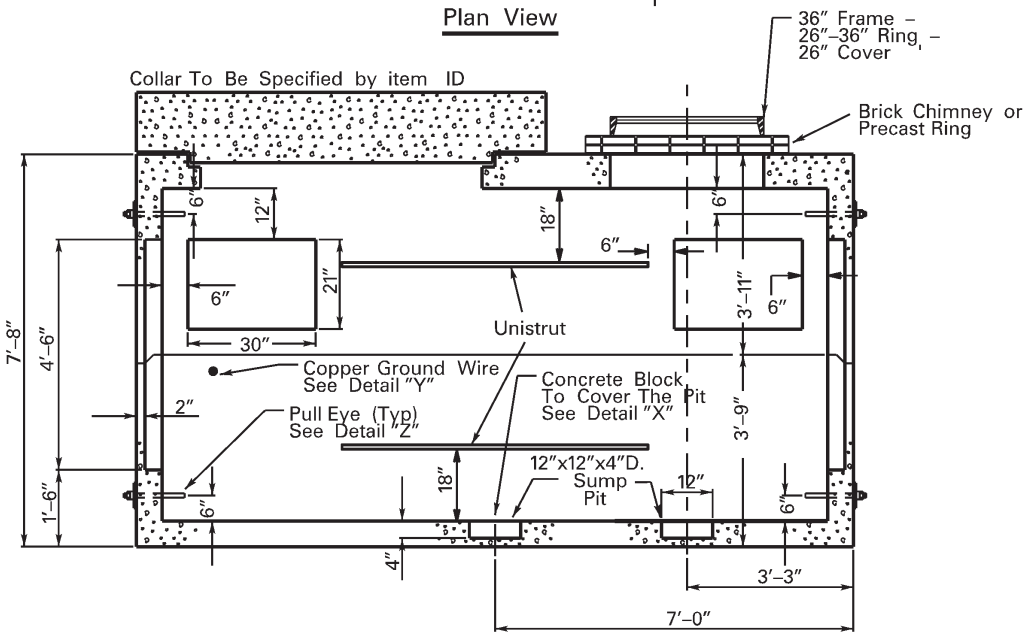

Section A–A

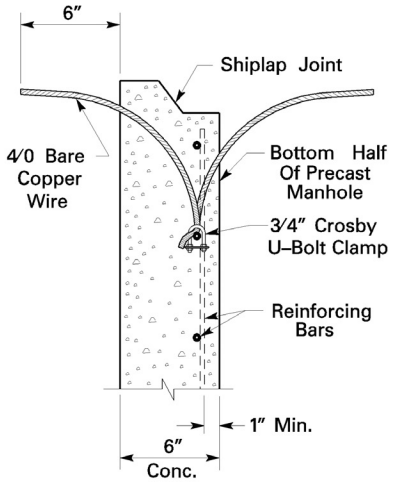

Detail "Y1"
2 Required

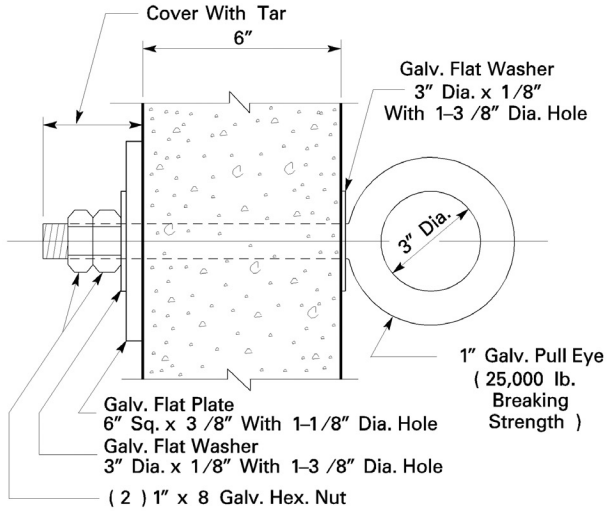

Detail "Z"
8 Required

Switchgear collars

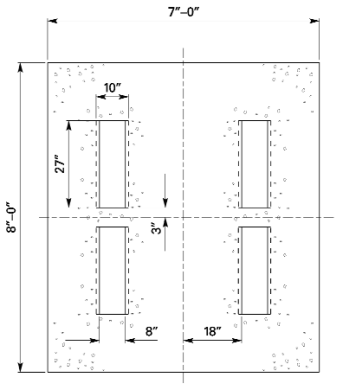

Collar "A"
15kV S/G Collar

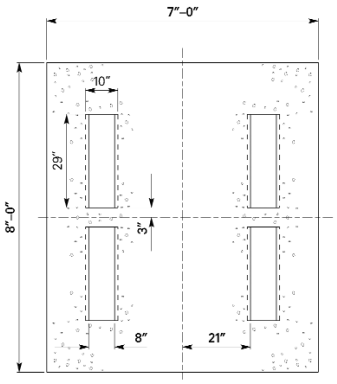

Collar "B"
25/35kV S/G Collar

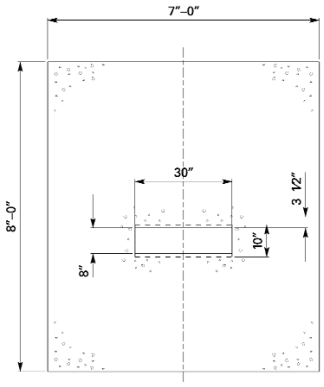

Collar "C"
PWVE Cooper Recloser

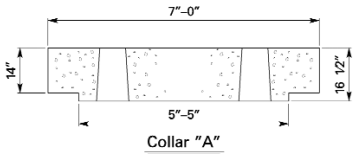

Collar "A"

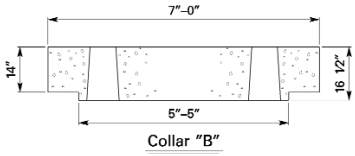

Collar "B"

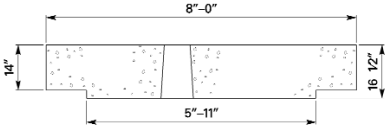

Collar "C"

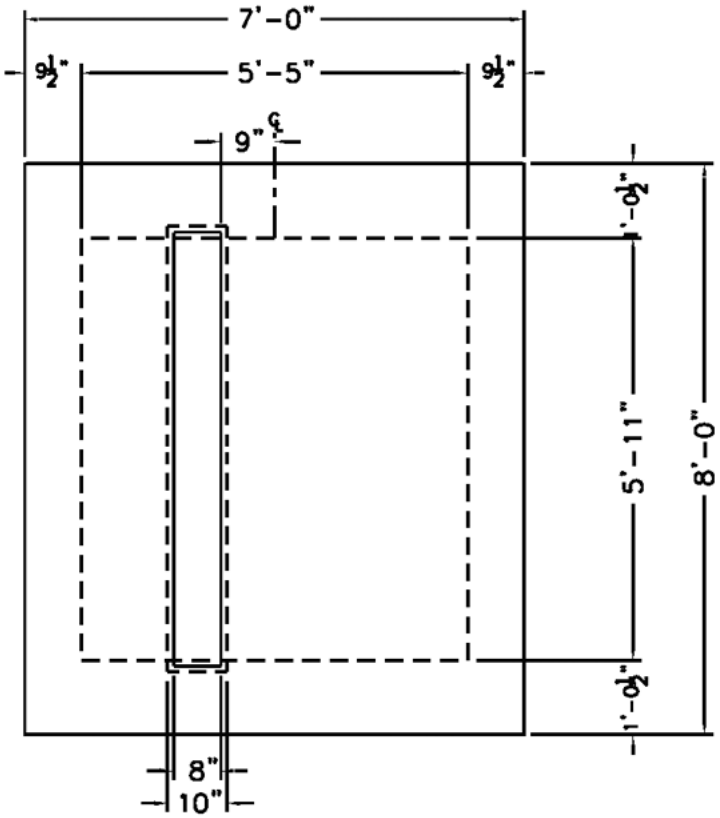

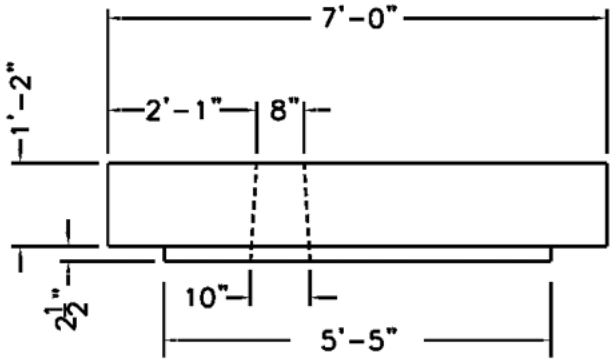

Collar D
35kV Vista Gear 3 AND 4 WAY

25.3 Switch Gear Manhole Ground Grid

The Customer shall install the ground grid for a switchgear manhole installation as shown in the picture.

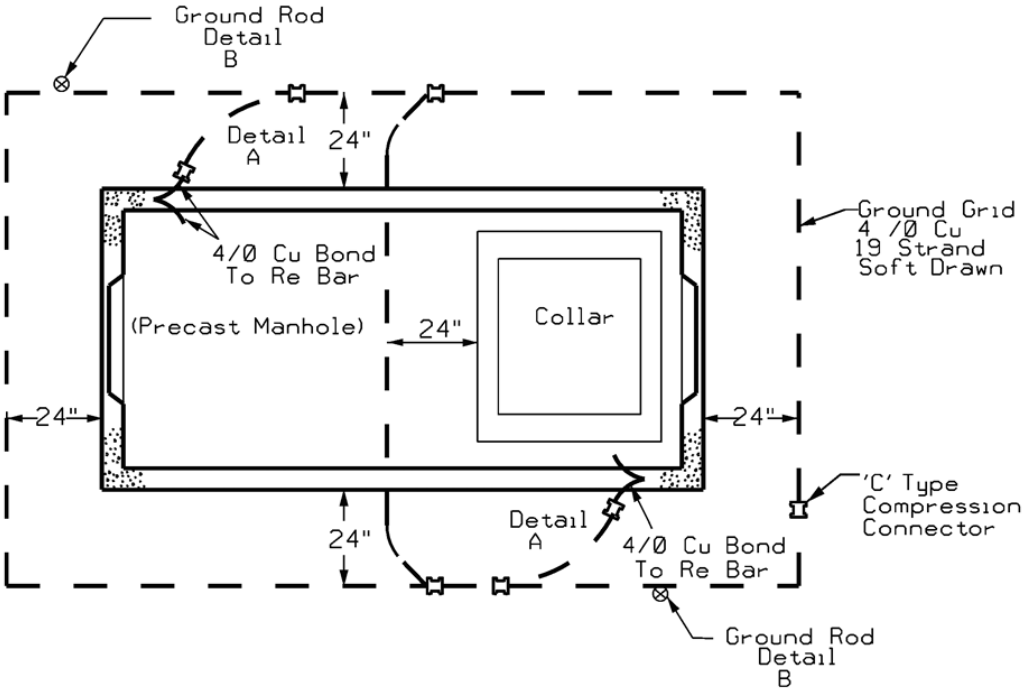

25.4 Switch Gear Manhole Bollard Layout

The drawing below depicts the locations for bollard installations around a switchgear manhole. Distribution Design/Planning and or company inspector shall designate the number and location of required bollards for each job. Refer to Transformer Mechanical Protection/ Bollards on page 12 for more details on Bollards.

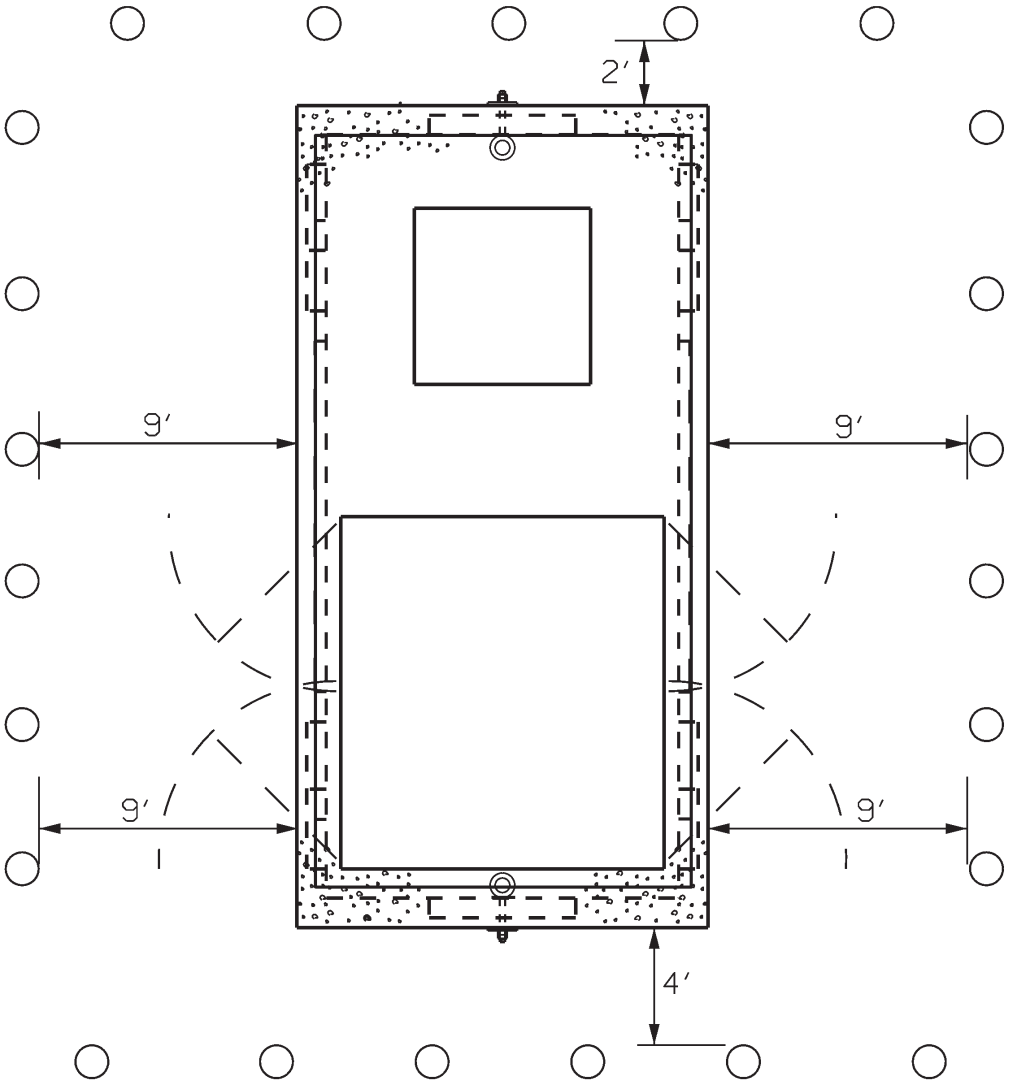

26.0 Fiberglass Switchgear Base with Conduit Entry's

The fiberglass switchgear base can be used as an alternate to the switchgear manhole in locations where allowed by the company. It is not recommended for installations where the primary coming into the base is 500MCM or larger.

***Note**: This base will only accommodate standard PMH-9, PMH 10, PMH 11 and PMH 12 switchgears.*

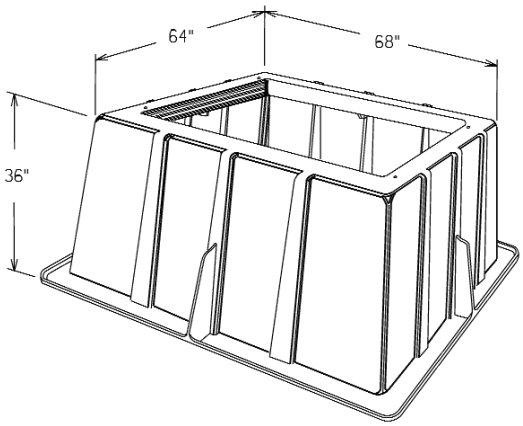

Typical Installation, Vertical Conduit Entry	Typical Installation, Horizontal Conduit Entry
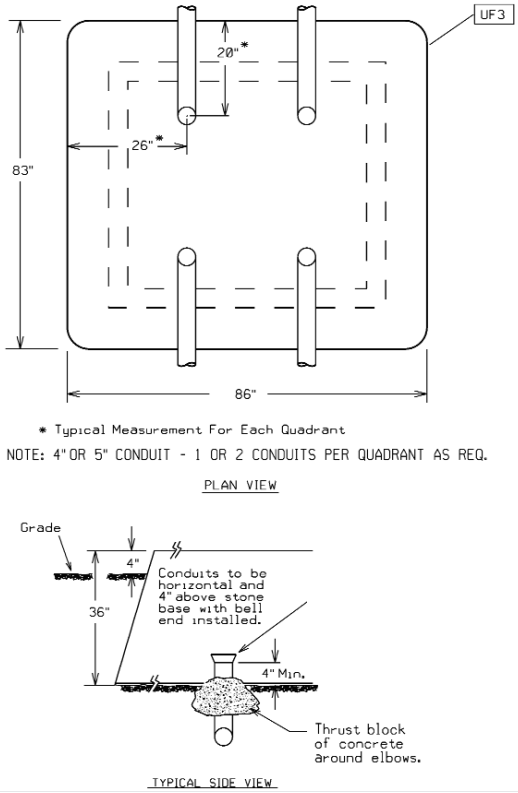	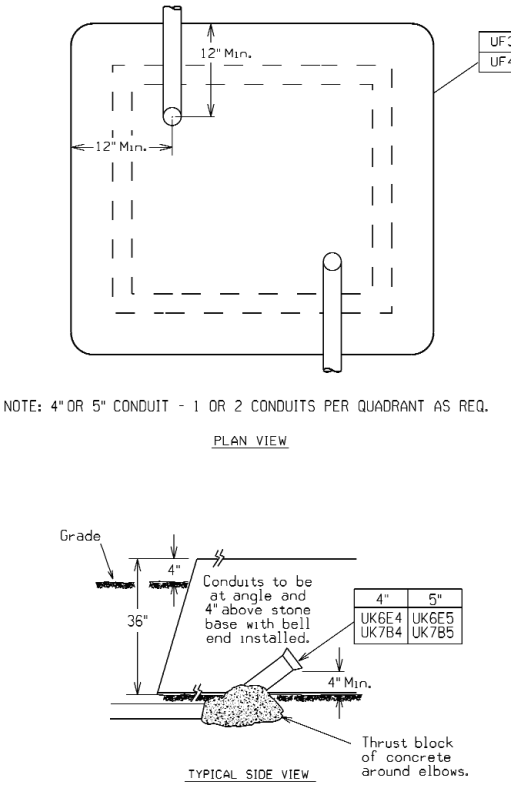

4"	5"
UK6E4 UK7B4	UK6E5 UK7B5

4" or 5 " conduit

4" or 5 " conduit

26.1 Fiberglass Switchgear Ground Grid

The Customer shall install the ground grid for a fiberglass switchgear installation as shown in the picture.

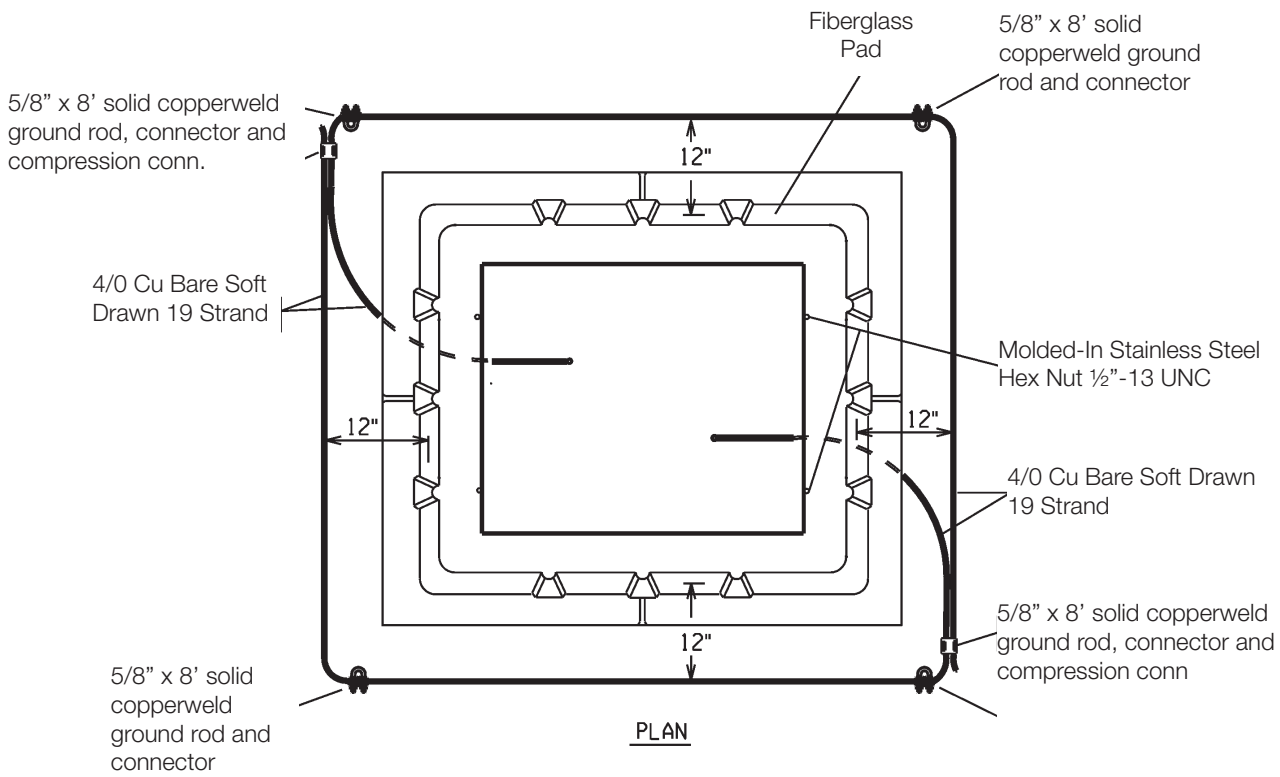

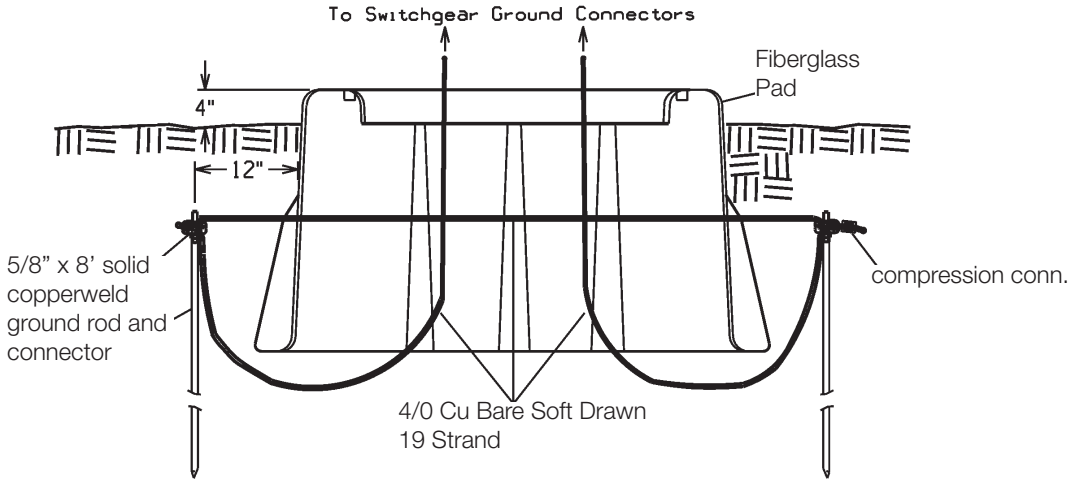

Front Elevation

26.2 Switch Gear Fiberglass Boxpad Bollard Layout

The drawing below depicts the locations for bollard installations around a switchgear fiberglass boxpad. Bold outline referenced on drawing is the exposed outside sides of the boxpad. Distribution Design/Planning and or company inspector shall designate the number and location of required bollards for each job. Refer to Transformer Mechanical Protection/Bollards on page 12 for more details on bollards. Bold outline referenced on drawing below is the exposed outside sides of the boxpad.

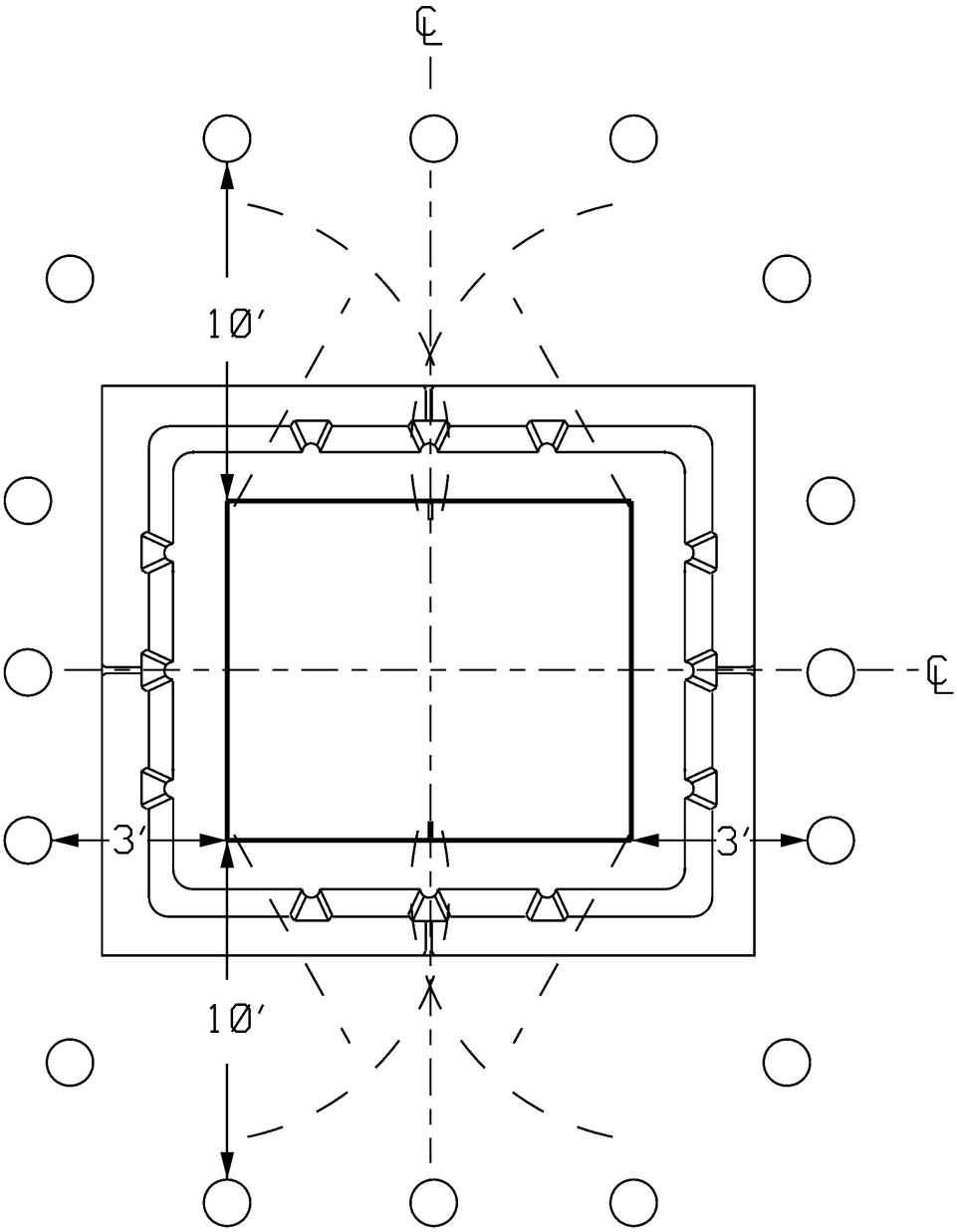

Figure 27.0-1 15kV Transformer Pad 75- 500kVA 44-113 (ref-44-113/UF8A)

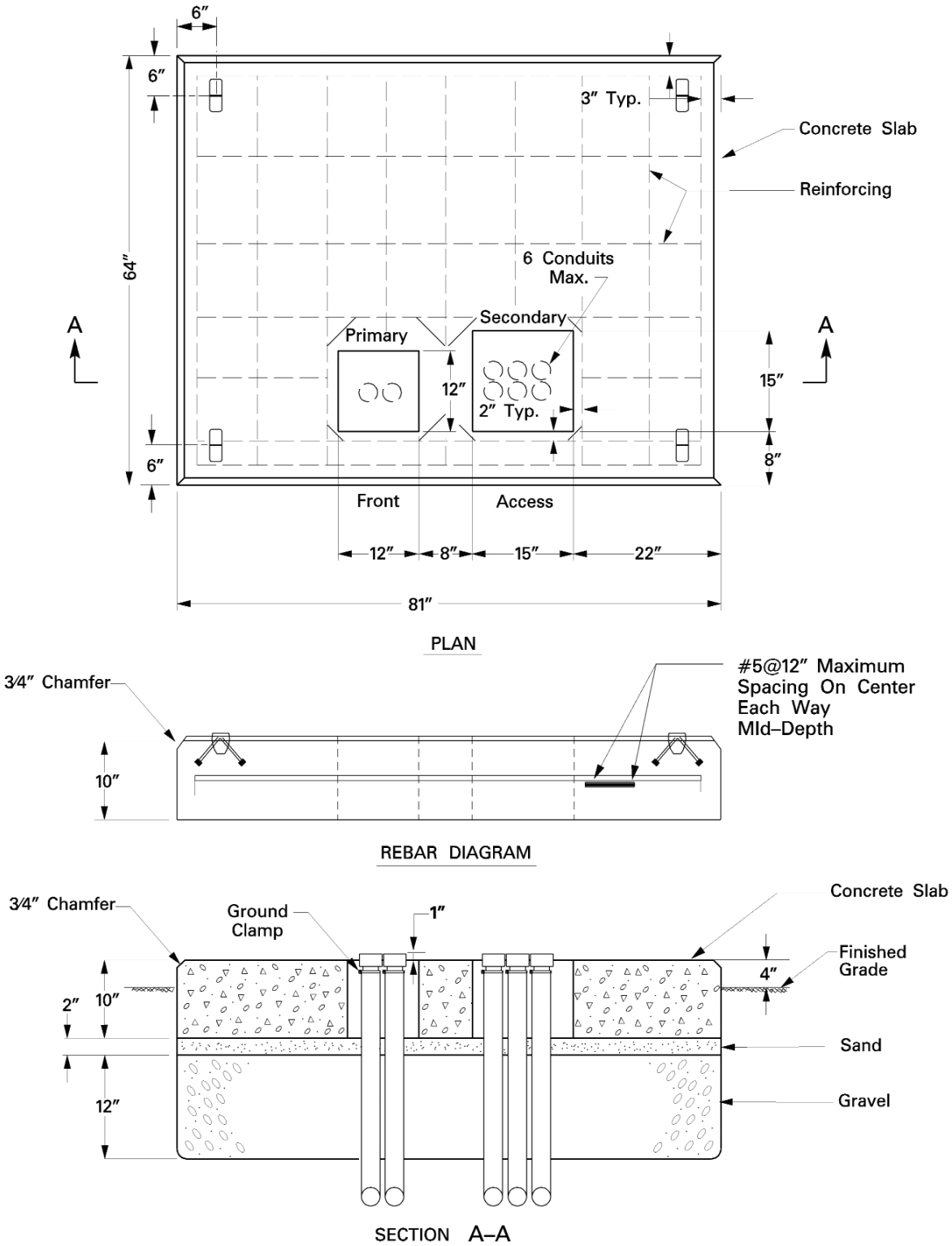

Figure 27.0-2 15kV Transformer Pad 750- 2500kVA 44-114 (ref-44-114/UF8B)

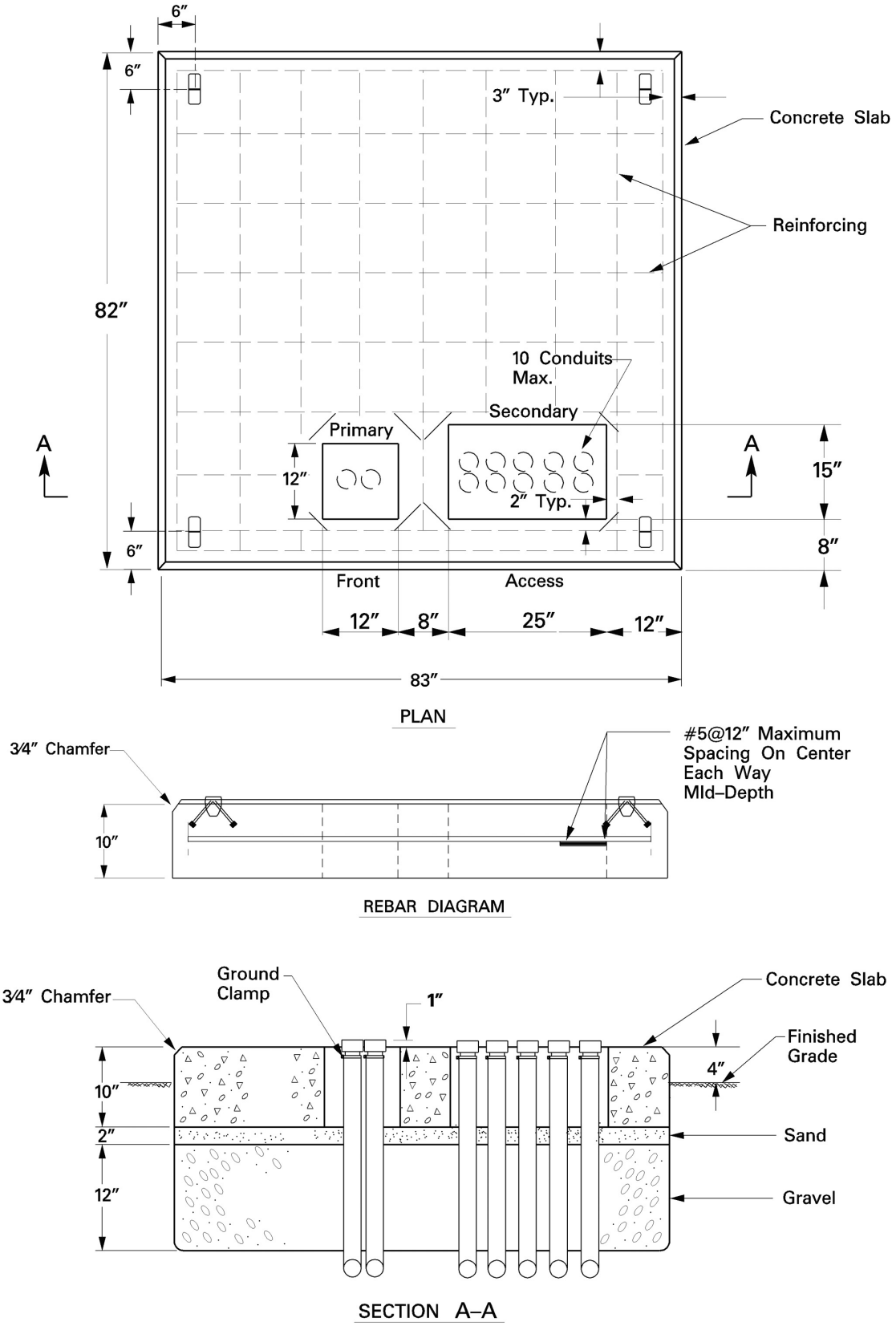

Figure 27.0-3 25-35kV Transformer Pad 75- 300kVA 44-115 (ref-44-115/UF8C)

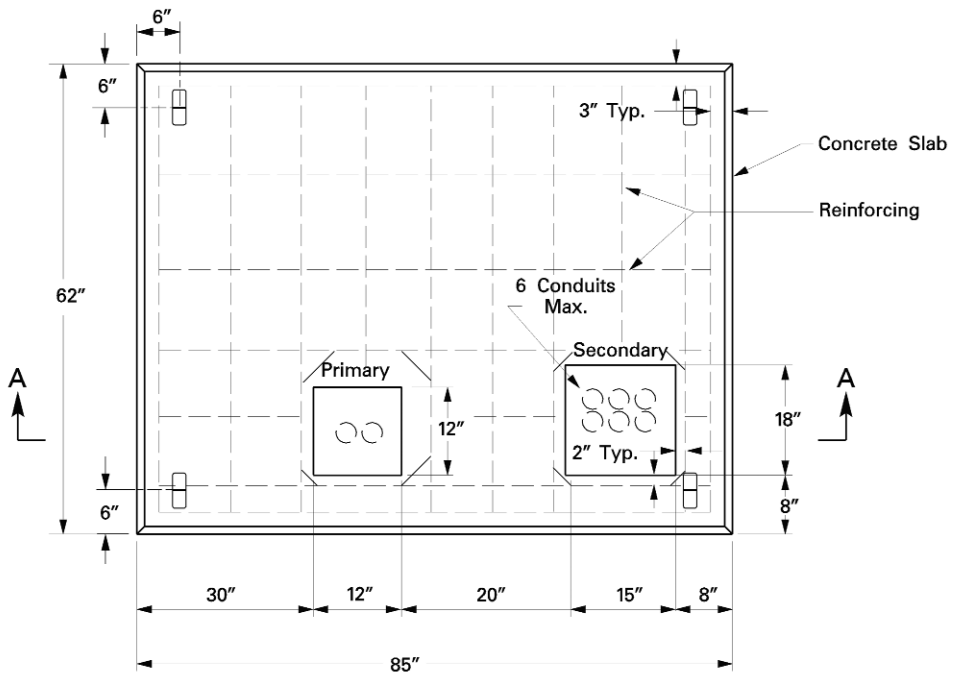

PLAN

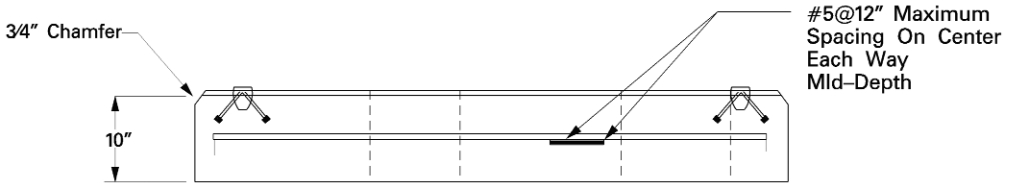

REBAR DIAGRAM

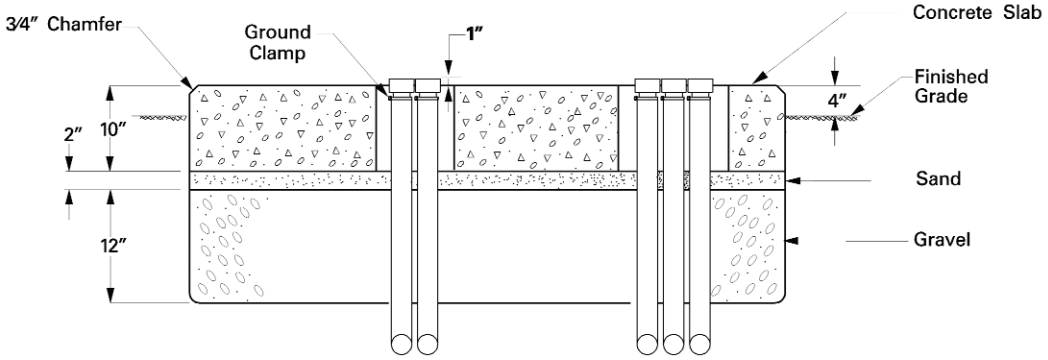

SECTION A–A

Figure 27.0-4 25-35kV Transformer Pad 500-2500kVA 44-116 (ref-44-116/UF8D)

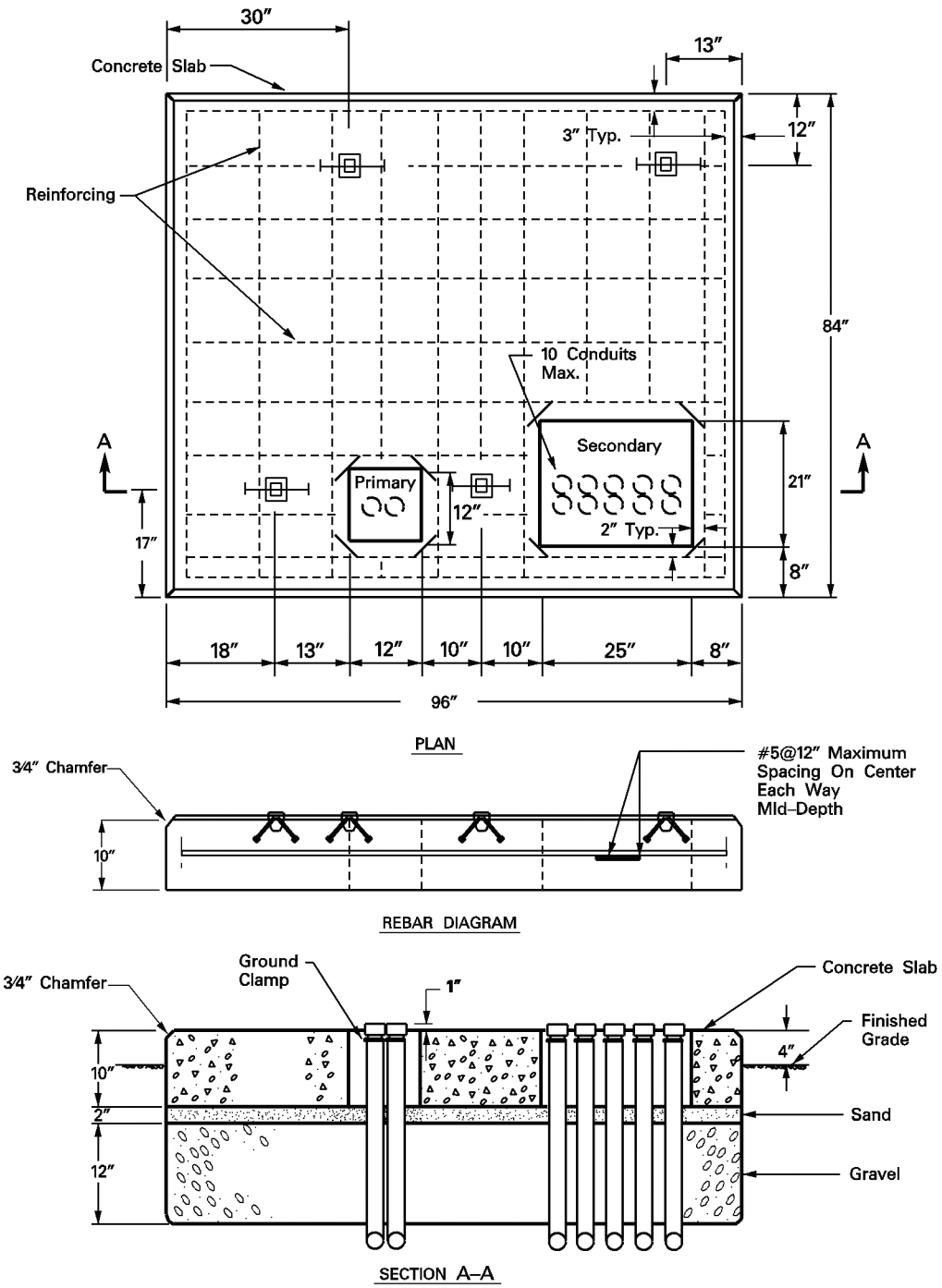

28.0 SAMPLE INSTALLATIONS

Picture of Conduit Installation Before Concrete Pour

Picture of Ballard Installation

Pictures of a Riser Pole Installation

Riser Pole Bonding
Rigid Galvanized Steel. Bond higher than 8' and at least 6" from top.

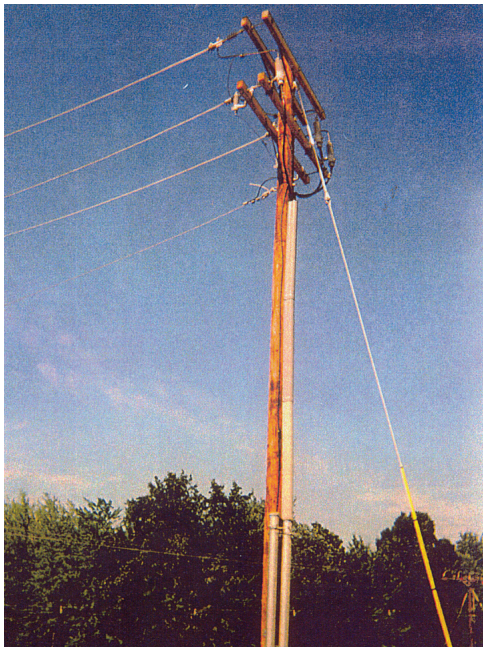

Completed Riser Pole
The Company will specify on which quarter of the pole the riser shall be installed, away from traffic.

Heavy Duty Handhole Installation

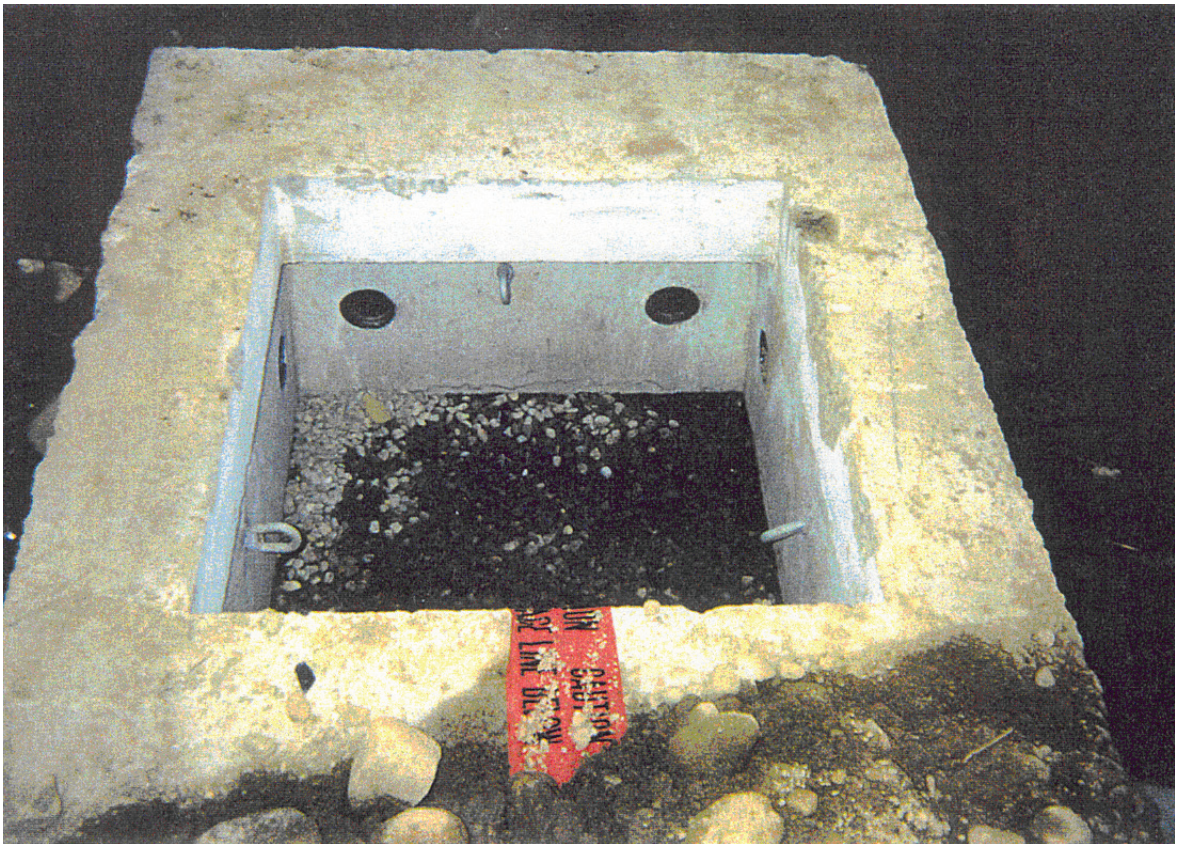

29.0 BOLLARD DETAIL

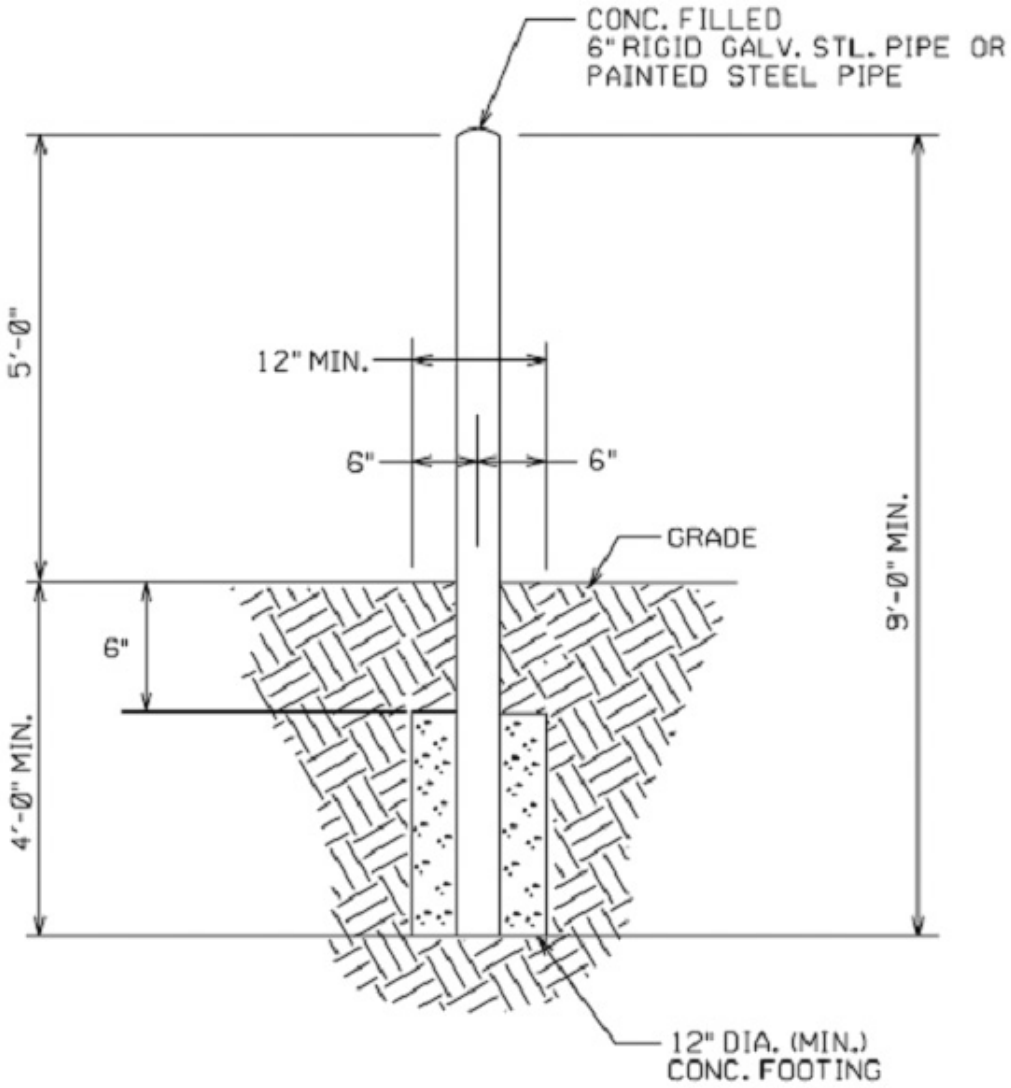

TYPICAL
BOLLARD DETAIL

30.0 CONCRETE SPECIFICATIONS

30.01 **SCOPE** - For general use of reinforced and plain concrete when job specifications are not being issued. Not for use when placing concrete underwater (Tremie concrete).

30.02 **MATERIALS** - Cement shall be a standard brand of Portland Cement Type II conforming to ASTM C150. If concrete is to be in contact with sea water or soils other than clean gravel, or if job conditions require earlier strength development than Type II provides, notify Civil Engineering for use of a higher strength or high-early strength concrete.

Sand shall be sharp and clean and shall conform to ASTM C33, latest revision.

Coarse aggregate shall be of gravel, crushed gravel or crushed stone and conform to ASTM C33, latest revision.

Water shall be from a potable water supply or tested and approved by Civil Engineering, assuring it is clean and free from injurious amounts of oil, acids, alkali, organic materials, or other harmful substances.

30.03 **READY-MIX CONCRETE** - Ready-mix concrete shall be proportioned at the plant. Mixing and delivery shall be in accordance with ASTM C94, latest revision. Mixes shall conform to Table 1 for minimum 28 day strength, nominal maximum size aggregate, and slump.

An air-entraining agent shall be added to concrete mixes in which the surface will be exposed to the elements. No other admixtures shall be used without approval of Civil Engineering. Air- entrainment content shall be as follows:

Mix M2 and M3:	7.0% plus or minus 2.0%	Mix M5:	4.5% plus or minus 1.5%
Mix M4:	5.0% plus or minus 1.5%	Mix M6 and M7:	6.0% plus or minus 1.0%

The Purchaser reserves the right to make tests at any time on materials used and concrete furnished by the ready-mix concrete supplier. The batch plant, equipment, and operating procedures are subject to inspection and approval by Civil Engineering or their qualified representative.

TABLE I - CONCRETE MIXES

Mix Number	Strength Minimum 28 Day Lbs/Square Inch	Aggregate Maximum Size Nominal	Slump Not More Than	Typical Uses
M1	2,000	1-1/2"	2"	Bedrock and Floor Fill
M2	2,000	1/2"	2"	Duct Lines - Tier Method
M3	2,000	1/2"	6"	Duct Lines - Unit Method
M4	3,000	1-1/2"	2"	Footings, Slabs on Ground, Foundation Walls, and Pile Caps
M5	3,000	1"	2"	Floor and Roof Slabs on Forms
M6	4,000	1"	2"	Hi-Strength Slabs and Walls
M7	5,000	1"	2"	Hi-Strength Slabs and Walls

Note: *If a greater slump is required, contact Civil Engineering for an additive to meet the specific job requirements.*

Ready-mix concrete shall be ordered in accordance with this Specification with a copy of same supplied to the ready-mix concrete manufacturer. The cubic yards, delivery point, time schedule, and applicable mix number for the particular application shall be specified on the order.

Delivery of a concrete batch in excess of the rated mixer drum capacity is cause for rejection. The latest drum inspection certificate should be available for verification.

30.04 **CONCRETE - DELIVERY AND MIXING** - In the event that delivery of concrete is called for when the air temperature is below 40º F the following shall apply:

a. When the air temperature is between 30º F and 40º F, the concrete shall be delivered in excess of 55º F.

b. When the air temperature is between 0º F and 30º F the concrete shall be delivered at a temperature in excess of 60º F.

In hot weather concrete shall be delivered at a temperature which will not cause difficulty from loss of slump, flash set, or cold joints. Discharge of concrete at the job site shall be completed within one (1) hour of adding the mixing water.

30.05 **CONCRETE - FORMS** - Formwork shall be designed and constructed in accordance with the American Concrete Institute's "Recommended Practice For Concrete Formwork", ACI 347, of latest date.

Forms shall be built substantially; true to form, lines, dimensions, and grades shown. They shall be braced and tied to maintain position and shape, without yielding to pressure of fluid concrete or other forces, including those produced by vibratory compaction.

Forms shall be constructed of 3/4" BB grade plywood supported with 2 x 4 studs on 16" centers. Forms shall not exceed a 10' pour height and form tie spacing shall not exceed 2'. Form ties and accessories, manufactured by Richmond Screw Anchor Company or equal, shall be used. Prefabricated forms are allowed after approval by Civil Engineering. The forms shall be vertical and symmetrical and in the largest sizes practicable. Sheets showing torn grain, worn edges, hole patches, or other defects, which impairs the texture of the concrete surface, shall not be used.

Forms shall be treated with approved form oil, before erection or reinforcing steel placement, to prevent adhesion of the concrete.

Forms shall be mortar-tight. For surfaces which will be exposed, the form faces shall be smooth and mortar-tight.

Forms shall be removed carefully to avoid damage to the concrete surfaces. The removal time is governed by the concrete's condition, curing temperature, curing time, and the forces the new concrete may be subjected. Under favorable curing conditions, forms may be removed no sooner after placement than the following:

- seven (7) days for supported floor and roof slabs
- 48 hours for wall and columns
- 24 hours for footing walls and piers
- 12 hours for underground duct lines

If high-early strength concrete is used, the above time periods may be reduced by one-half.

These periods presented are the cumulative number of days or fractions thereof, not necessarily consecutive, during which the concrete temperature is above 50º F. Whenever formwork is removed during the curing period, the exposed concrete shall be repaired immediately, finished, and cured as specified under "Concrete - Curing".

30.06 **CONCRETE - PLACEMENT** - Concrete shall not be placed until the forms, previously poured concrete surfaces, reinforced steel, and embedded parts have been cleaned of laitance, loose or defective concrete, soil on rock surface, and any other foreign materials.

All concrete placed when the air temperature is above 45º F shall be placed at the coolest temperature as practicable. Concrete placement is not permitted when hot weather conditions prevent proper placement and consolidation. Concrete will not be accepted if its temperature is in excess of 80º F.

When the mean daily temperature falls below 40º F, the minimum concrete temperature shall be 55º F and as close to this minimum as possible.

When the air temperature is below 40º F, provide suitable protection so the concrete can be maintained at a minimum of 50º F throughout the curing period. The protection and heat source, shall maintain the required temperature and moisture conditions without injury due to concentration of heat. All materials which the concrete contacts such as reinforcing, forms, ground, etc., shall be free of frost prior to placement.

Concrete temperature changes during and immediately following the curing period shall be as uniform as possible and shall not exceed 5º F in any one hour, nor 40º F in any 24 hour period. When heaters are used, prevent local surface heating and drying and provide adequate ventilation to prevent carbonation damage to exposed concrete surfaces. Thermostatic temperature controls shall be provided to control the heated enclosures to 50º F. Temperatures exceeding 80º F are to be avoided.

Concrete shall not be allowed to fall from the end of a chute, tube, or bucket more than 5 feet to point of deposit and shall have a fall free from obstructions. Chutes shall be metal or metal-lined.

Pumping equipment, pipelines, procedures, etc., shall be in accordance with ACI 304R, latest revision, and Civil Engineering shall be consulted for mix design of any pumped application. Conveying equipment for pumped concrete shall be of suitable kind, without “Y” sections and with adequate pumping capacity. No aluminum pipe shall be used. Placement shall be controlled so there is no separation in the discharged concrete. The maximum loss of slump in pumping equipment shall be 1½”.

Concrete shall be deposited as near to its final position as possible to avoid long flows in the forms. Concrete shall not be moved more than 10' from point of deposit. Concrete shall be placed in successive horizontal layers, ranging in thickness from 6" to 15" maximum. Concrete shall be placed within 1½ hours after addition of cement to the aggregate.

Where conditions make it difficult to place concrete uniformly and perform compaction at the bottom of forms, batches of mortar containing the same proportion of cement to sand as in the concrete mix shall be deposited first and spread over the cleaned surface to a depth of approximately 1".

Segregated, unworkable, and excessive slump concrete shall not be placed or, if placed, shall be removed and wasted as directed. High slump concrete resulting from addition of approved additives is acceptable for placement. Free water accumulating on new concrete during placement shall be removed as directed by the Engineer.

Placement and compaction methods shall ensure homogeneous concrete with maximum consolidation without segregation. Consolidate concrete by internal vibration, spading, or rodding by working it thoroughly around reinforcement, embedded items, and into corners of forms to eliminate all air or stone pockets which cause honeycombing,

pitting, or planes of weakness. Concrete contacting all formed surfaces shall be spaded manually to eliminate air bubbles.

Place horizontal construction joints at uniform vertical spacing unless otherwise shown on the drawings. Concrete shall not be placed to a depth of more than 10 feet in any 24 hour period, unless approved by Civil Engineering. All concrete placements shall be such as to keep cold joints from forming.

Whenever work is suspended on any section for more than one hour, the horizontal edges of the concrete next to the forms shall be brought to a plane perpendicular to the form face, and treated so no irregular, rough, or feathered edge joints show in the finished work. Before placing the next lift, clean the joint surface and remove all laitance. Immediately before placing new concrete wet the joint surface and remove all standing water.

Unless adequate weather protection is provided, do not place concrete during rain, sleet, or snow.

30.07 **CONCRETE - CURING** - Protect freshly deposited concrete from premature drying and hot or cold temperatures. Maintain a constant temperature throughout the curing period without drying.

All exposed concrete surfaces shall be kept continuously moist overnight by ponding, sprinkling, or by use of an approved membrane type curing compound, which conforms to ASTM C309, latest revision, and applied in conformance with the manufacturer's recommendations.

Curing shall continue, using one of the above methods or waterproof paper, for a 7 day period (3 days for high-early strength concrete) maintaining the concrete at a minimum temperature of 50º F as is practicable. Protective covering with tarpaulins, hay, straw, etc. shall be provided to retard moisture evaporation during hot weather and to prevent rain damage before hardening. Protective covering shall be available for immediate use at all times.

During the curing period, the concrete shall be protected from damaging mechanical disturbances, particularly load stresses, heavy shock, and excessive vibration.

30.08 **SURFACE FINISH** - All surface fins shall be removed.

Exposed concrete surfaces shall not be given any special treatment to enhance appearance, such as rubbing with a stone, without permission of Civil Engineering.

30.09 **LOADING OF CONCRETE -** Normal concrete structures shall not be subjected to external loads in less than:

- four days for foundations, manhole floors, and walls
- seven days for floors, roofs, and columns

Each concrete placement shall be allowed to set 48 hours before addition of a subsequent pour upon it. If high-early cement is used this time period may be reduced by one-half.

Trenches containing concrete encased duct lines constructed on undisturbed original ground may be backfilled not less than two (2) hours after placement. Compaction by light tamping equipment may proceed immediately. Loading of the backfill by heavy equipment or traffic is not permitted before 12 hours after placement.

30.10 **WATERPROOFING -** Waterproofing is provided by the density of the concrete mix and the thickness of concrete. Care must be used in placing and compacting the concrete to eliminate all voids and potential leakage paths. When structures less than 8" thick must be waterproof, consult Civil Engineering to revise the mix design to achieve the desired waterproof result.

31.0 Easement Applications

31.1 NEW ENGLAND EASEMENT APPLICATION FORM

FOR NATIONAL GRID'S USE ONLY

Application for Easements (check one): ❒ OH (jointly owned or solely owned) ❒ UG ❒ Electric
❒ Padmount transformer only ❒ URD ❒ Gas

Work Request Number_____

Utility Engineer's Name:_____Telephone Number: _____

Please complete **ALL** of the sections below so that we may prepare an easement for your signature. Do not leave any sections unanswered. If a section does not apply to you simply put **"n/a"** on that line. Incorrect or incomplete information will delay service installation.

Property Owner(s):_____

Property Owner Mailing Address

Address: _____

City: _____

State & County _____

Zip _____

Property Address of Easement
(if different from mailing address)

Address: _____

City: _____

State & County _____

Zip _____

Customer Contact Person: _____

Daytime Phone(s): _____

Re: Subdivision Title: _____

1. Provide us with a **RECORDED** copy of the present owner's deed, Book_____ Page_____

   a) If multiple deeds make up the whole parcel, please include all deeds.

   b) If the Property Owner is a b1) CORPORATION, b2) TRUST, b3) PARTNERSHIP, or b4) LIMITED LIABILITY COMPANY, provide the following which is applicable:

   b1) President Name: _____Treasurer Name: _____
   See Footnote[1] Below

   Or

   Vice President:_____Asst. Treasurer:_____

[1] If neither "Name Combinations" is available, the person(s) signing the easement must have a Corporate vote authorizing them to sign on behalf of the Corporation.

b2) Trust: No. Of Trustees:_____Name(s): _____

Name of Trust:_____

b3) Partnership: Number of Partners:_____Name(s):_____

b4) LLC: Authorization to Sign, Name(s):_____

2. a) Provide us with an approved: "Definitive Subdivision Plan"

Plan Book:_____ Plan:_____ Dated:_____

b) If there is no recorded subdivision plan please include the following information:

Assessor's Map:_____Block:_____ and Lot:_____

3. Is your property mortgaged (circle one)? YES NO

If "YES", please complete this section:

a) Name of Bank/Company/Person holding mortgage(s):_____

b) Address of mortgage holder(s): _____

c) Date and recording information of mortgage(s): _____

Date:_____County Recorded:_____Book:_____Page:_____

Additional Comments:

Please contact your Account Manager or Service Administrator if you have any questions regarding this form.

31.2 NEW YORK EASEMENT APPLICATION FORM

Application For Utility Electric/Gas Distribution Easement

This Portion to be Completed by National Grid Representative

Application Date Received:_____

Type of Easement: ❒ OH (jointly owned or solely owned) ❒ UG Electric ❒ Gas
❒ Padmount transformer only ❒ URD

National Grid Representative_____**Telephone**_____

Requestor of Service

Please complete **ALL** of the sections below so that we may prepare an easement for your signature. Do not leave any sections unanswered. If a section does not apply to you, simply put "n/a" on that line. **(Incorrect or incomplete information will delay service installation.)**

Property Owner(s): _____

Property Owner Mailing Address

Address: _____

City/Town: _____

State: _____

Zip Code: _____

Telephone: _____

Property Address of Easement
(if different from mailing address)

Address: _____

City/Town: _____

State & Country: _____

Zip Code: _____

Name of Subdivision: _____

Telephone: _____

Contact Person: _____

Daytime telephone(s): _____

1. Provide us with a **RECORDED** copy of the present owner's deed (and survey) if available. If multiple deeds make up whole parcel, please include all deeds.

   Book: _____ **Page:**_____

2. Tax map number of property where service is to be installed (SBL): _____

3. Recording reference to approved subdivision plan:

   Plan Book: _____**Plan:** _____ **Date:** _____

4. If the property owner is a (a) CORPORATION, (b) TRUST, (c) PARTNERSHIP, or (d) LIMITED LIABILITY COMPANY, provide the following which is applicable:

(a) CORPORATION NAME: _____

President:_____Treasurer:_____

Vice President: _____Assit. Treasurer: _____

(If none of the Officers listed above are available, the person(s) signing the easement must have a corporate vote authorizing them to sign on behalf of the Corporation.)

(b) TRUST NAME:_____

Number of Trustees:_____Names: _____

_____

(c) PARTNERSHIP NAME: _____

Number of Partners:_____Name(s):_____

(d) LIMITED LIABILITY COMPANY (LLC) NAME: _____

Authorization to sign – Name(s):_____

Note: As a public utility, National Grid is required to provide electric/gas service; however, you, the customer, are required to provide National Grid with all the easement rights necessary to install your electric/gas service, including any easement rights which must be acquired from others.

Please return or fax this document and the requested information to:

{National Grid Representative}

{Company name}

{Location: Street name}

{Location: City/Town, State, Zip Code}

{Fax number}

32.0 Concrete Approved Precast Manufacturers

Arrow Concrete Products
560 Salmon Brook St
Granby,CT 06035
Jim Jurczyk
1-860-653-5063

Fort Miller Company
P.O. Box 98
Schuylerville, NY 12871
Joe O'Malley
1-518-695-5000

Hoytes Concrete Products
7839 New Floyd Road
Rome NY 13440
Thomas Hoytes
1-877-336-7789

Kistner Concrete Products Inc.
5550 Hinman Rd
Lockport, NY 14094
1-716- 434-6157
Old Castle Precast
41 Almeida Rd
Rehoboth MA 02769
Bruce Blackledge
1-508-336-7600

United Concrete
173 Church St.
Yalesville CT 06492
Tom Long
1-203-535-4114

D.A. Collins
101 Route 67
Mechanicville, NY 12118
Andrew Timmis
1-518-664-9855

Grimm - Green Island
Green Island, NY 12183
1-518- 272-1100

Jefferson Concrete
22850 Murrock Circle
Watertown NY 13601
1-315-788-4171

Lakelands Concrete
7520 E. Main St. Lima NY 14485
Carl Ashley
1-585-624-1990

Shea Concrete
87 Haverhill Street
Amesbury, MA 01913
Greg Stratus
1-800-696-7432

Utility Precast Inc.
153 Cranberry Highway
Rochester MA 02770
1-508-291-1314

33.0 Approved Material – Underground Commercial Installations

National Grid Item ID	Item Description	Manufacturer 1 Part Number	Manufacturer 2 Part Number	Manufacturer 3 Part Number
Conduit—Straight				
2010404	Conduit, 4", schedule 60 DB PVC	Carlon: 48815	IPEX: 8741	Cantex: A79EA42
2011024	Conduit, Galvanized, 4"	By Description		
Conduit—Blends				
5690446	Bend, Galvanized, 4" 36" radius	BaynesJones 400R9036	Conditmfg TUB490D36RGALEL	
5690493	Bend, PVC Sch 40, 4", 90 Degree, 36" Rad.	Cantex: 5233842	Carlon: UA9FNB	Certifsaft 59734
Spacers				
5646963	Spacer, 4", Base	GS Industries: 186-1	IPEX: 29573	
5646960	Spacer, 4", Inter.	GS Industries: 185-1	IPEX: 29557	
Conduit Accessories				
5641210	Riser Strap, 4"	Electrical Materials: 50-4 USHD	BaynesJones MINRLAC HD-296	
7011830	Lag Screw, 1/4" x 2"	Elect. Materials: 106 or 106M	Joslyn J26486.1	PLH LSNW-142
3503074	Pipe Grd. Connector, 4" and 5"	Burndy GAR3905-BU	Thomasbett (0)3905-BU	
2010424	Temporay Duct Plug, 4" DB	Carlon: P258NT	Scepter 57	
2011254	Duct Plug Galvanized 4"	Crousehind PLG105		
2010434	Adapter, Female, PVC-Steel, 4"	Carlon: E942N	Cantex: 5140052	Scepter FA55
5693359	Coupling, 5 Degree, Bell-Spigot, 4"	Carlon: E244N	Cantex: 6151452	Certifsaft 59544
2010444	Coupling, 5 Degree, Bell-Bell, 4"	Ameripipe FT518	Carlon E2440NF	Scepter 7604360040
2010454	Straight Coupling, 4"	Carlon: E240N	Scepter 760443540	
2010464	Bell End Female 4"	Carlon: E997N	Cantex: 5144012	
9202062	Mule Tape	NEPTCO WP2500P	Arnco DLWP25	Condux 08096303
2011254	Plug Galvanized. 4" Threaded for Spare Riser	CROUSEHIND PLG105		
9202201	Plug Conduit 4" with metal loop for mule tape.	Carlon MAEPG7		

National Grid Item ID	Item Description	Manufacturer 1 Part Number	Manufacturer 2 Part Number	Manufacturer 3 Part Number
Transformer Foundations – Precast				
9200896	Three Phase 15 kV 75-500 kVA	Reference 044-113 UF8A	Lakeland UF8A	
9202324	Three Phase 15 kV 750-2500 kVA	Reference 044-114 UF8B	Lakeland UF8B	
9200898	Three Phase 25-35kV 75-300kVA	Reference 044-115 UF8C	Lakeland UF8C	
9200896	Three Phase 25-35kV 500-2500kVA	Reference 044-116 UF8D	Lakeland UF8D	
Grounding Accessories				
2011100	Grounding Bushing, 4"	CROUSEHIND GLL-10C	OZGEDNEY BLG 4122	
3503013	Grounding Rod 5/8” x 8’ Solid Copperweld	ERITECH 615880	Galvin 6258	Joslyn: J8338
9201272	2/0 Cu, Bare, Soft Drawn, 19 Strand	By Description		
3503328	Ground Rod Clamp	Burndy: GRC58	Blackburn: JAB58H	Electromotion EM58DBW
5960412	“C” Connector, 2/0 – 2/0	Burndy: YC26C26TN		
3503074	Clamp, ground, conduit 4” heavy duty, Bronze	Burndy GAR3905-BU		
Splice box, Handhole, Switchgear Manhole				
5640808	Splice Box as shown on page 22	CDR Systems PA12-3060-37	Highline CVA306038HEIK	
5643075	Heavy Duty Handhole on page 21	Oldcastle Precast 502600		
9200893	Switchgear Manhole 15kV	OldcastlePrecast 202700/203400/203900		
9200894	Switchgear Manhole 25-35kV	Oldcastle Precast 202700/203400/204000		
2012198	Fiberglass Switchgear Base on page 33	HighLine HL-54		
Precast Oil Containment Wall				
9202153	Three Phase 15 kV 75-500 kVA	Oldcastle 13411	Lakeland TPC UF8A	Arrow S-OCC 134110
9202154	Three Phase 15 kV 750-2500 kVA	Oldcastle 135134	Lakeland TPC UF8B	Arrow S-OCC 135134
	Three Phase 25-35kV 75-300kVA	Oldcastle 13411	Lakeland TPC UF8C	
	Three Phase 25-35kV 500-2500kVA		Lakeland TPC UF8D	

National Grid Item ID	Item Description	Manufacturer 1 Part Number	Manufacturer 2 Part Number	Manufacturer 3 Part Number
Manhole Frame, Ring and Cover				
5644514	Frame 36” square	Lebaron Foundry LE386	Syracuse Casting	
5644550	Ring 26” to 36”	Lebaron Foundry LE2836X1	Syracuse Casting	
5644360	Cover 26”	Lebaron Foundry L28C11	Syracuse Casting	

34.0 Other Materials/ Suppliers

Secondary connectors

Burndy Co

Richards Co

Utilco

Compression Connection Crimp Tool
(used for ground grids)

Burndy MD7-8 with the extra die set (W-BG).

Stuart C. Irby Co
4583 Buckley Road
Liverpool, NY 13088
Peter Karl
1-315-652-1238

Secondary Splice box

Elliot Industries

A.B.B.

Manhole frame, ring and cover

Lebaron Foundry
1-800-626-4653

Syracuse Casting
1-315-699-2601

Bollard Covers

Part number # BC760YW

Innoplast 1-800-516-9287

The materials in this book can be found at most Electrical supply stores, listed below are a few.

Baynes Electrical Supply
Southern MA and RI
1-800- 242-0911

Electrical Wholesalers
All of New England
1-800-522-3232

Granite City Electric
All of New England
1-800-850-9400

Graybar Electric
All service areas US
1-800-472-9227

Wesco
New Hampshire
1-800-258-5228

35.0 Job Check Off Sheets

35.1 3 PHASE UCD DIRECT BURIAL INSPECTION CHECK LIST NEW YORK

Do not backfill BEFORE trench has been inspected and approval by Company. Every item listed below must be inspected and checked by the company inspector.

N*	Y*	
		PRE-TRENCH *(no inspection)*
❒	❒	Final grade established, surface rough graded, and roadways staked.
❒	❒	Developer has Service Specifications on site.
❒	❒	Easement has been executed.
		TRENCH
❒	❒	Min. 30" depth from existing grade to top of cable during all phases of construction.
❒	❒	Electric infrastructure on “road side”, in all multi-utility trench installations.
❒	❒	Min. separation between electrical conduit and foreign conduits or pipes.
❒	❒	All road crossing perpendicular.
❒	❒	2” minimum of sand in base of trench.
		PRE-BACKFILL *(After cable is installed)*
❒	❒	4” of sand minimum on top of cable
❒	❒	Minimum separation to foreign utilities and subsurface pipes maintained.
❒	❒	Sand or screened backfill (with less than 1” stones) on-site for backfilling entire trench, (inspector may witness backfilling).
❒	❒	Warning tape 8" to 12" below finish grade and directly above electrical system.
❒	❒	No parallel non company utilities directly above or below electrical system.
		RISER POLE
❒	❒	90° BEND AND straight pipe galvanized steel conduit,. 90° Bend Concrete Encased
❒	❒	Steel-PVC adapter and steel sweep shall not be encased.
❒	❒	Ground clamp installed with tap.

**NOTE Y – Acceptable N – Deficient*

35.2 3 PHASE, CONDUIT ENCASED IN CONCRETE INSPECTION CHECK LIST

Do not pour concrete or backfill BEFORE conduit system inspection and approval by company inspector. Every item listed below must be inspected and checked by a company inspector.

N*	Y*	
		PRE-TRENCH *(no inspection)*
❒	❒	Final grade established, surface rough graded, and roadways staked.
❒	❒	Developer has Service Specifications on site.
❒	❒	Easement has been executed.
		TRENCH *(prior to concrete encasement)*
❒	❒	Min. 30" depth from existing grade to top of encasement during all phases of construction.
❒	❒	Electric conduits on “road side”, with 1 spare conduit, in all multi-utility trench installations.
❒	❒	Min. separation between electrical conduit and foreign conduits or pipes.
❒	❒	All road crossing perpendicular.
❒	❒	Conduit plugs installed.
❒	❒	Plastic spacers properly installed every 5 to 8’ intervals' and at every coupling.
❒	❒	All curves properly formed with 5° couplings.
❒	❒	Company conduits to be in separate encasement from all other utilities.
		PRE-BACKFILL *(after concrete encasement)*
❒	❒	Company conduit in separate encasement.
❒	❒	Minimum separation to foreign utilities and subsurface pipes maintained.
❒	❒	Encased concrete thickness > 3" around all conduits.
❒	❒	Sand or screened backfill (with less than 1” stones) on-site for backfilling entire trench, (inspector may witness backfilling).
❒	❒	Warning tape 8" to 12" below finish grade and directly above electrical conduit system.
❒	❒	No parallel non company utilities directly above or below electrical system.
		AFTER BACKFILL *(pre-conductor installation inspection)*
❒	❒	Install 2500 lb. Pulling Tape in all conduit after rodding with a mandrell.
		HEAVY DUTY HANDHOLE
❒	❒	6" of crushed stone under handhole.
❒	❒	Seal around conduit entrances with concrete or mortar.
❒	❒	Manhole cover at finish grade with 2 courses of brick and grout for chimney.
		PULLBOX/SPLICE BOX
❒	❒	4" of crushed stone under pullbox foundation.
❒	❒	Cover left secured to box when unattended.
❒	❒	Flush with sidewalk or slightly above any grassy area.
❒	❒	Installed behind curb or other protection to prevent damage (e.g. snowplow)
		RISER POLE
❒	❒	90° BEND AND straight pipe galvanized steel conduit.
❒	❒	Steel-PVC adapter and steel sweep shall not be encased.
❒	❒	Ground clamp installed with tap.

**NOTE Y – Acceptable N – Deficient*

35.3 3 PHASE UCD CONDUIT INSPECTION CHECK LIST NEW YORK

Every item listed below must be inspected and checked by the company inspector.

N*	Y*	
		PRE-TRENCH *(no inspection)*
❒	❒	Final grade established, surface rough graded, and roadways staked.
❒	❒	Developer has Service Specifications on site.
❒	❒	Easement has been executed.
		TRENCH
❒	❒	Min. 30" depth from existing grade to top of conduit during all phases of construction.
❒	❒	Electric infrastructure on “road side”, with 1 spare conduit if applicable, in all multi-utility trench installations.
❒	❒	Min. separation between electrical conduit and foreign conduits or pipes.
❒	❒	All road crossing perpendicular.
❒	❒	Conduit plugs installed.
❒	❒	Plastic spacers properly installed every 5 to 8’ intervals and at every coupling.
❒	❒	All curves properly formed with 5° couplings.
❒	❒	Company conduits to be in separate from all other utilities.
		PRE-BACKFILL
❒	❒	Company conduit separated from other utilities.
❒	❒	Minimum separation to foreign utilities and subsurface pipes maintained.
❒	❒	Sand or screened backfill (with less than 1” stones) on-site for backfilling entire trench, (inspector may witness backfilling).
❒	❒	Warning tape 8" to 12" below finish grade and directly above electrical conduit system.
❒	❒	No parallel non company utilities directly above or below electrical system.
		AFTER BACKFILL *(pre-conductor installation inspection)*
❒	❒	Install 2500 lb. Pulling Tape in all conduit after rodding with a mandrell.
		HEAVY DUTY HANDHOLE
❒	❒	6" of crushed stone under handhole.
❒	❒	Seal around conduit entrances with concrete or mortar.
❒	❒	Manhole cover at finish grade with 2 courses of brick and grout for chimney.
		PULLBOX/SPLICE BOX
❒	❒	4" of crushed stone under pullbox foundation.
❒	❒	Cover left secured to box when unattended.
❒	❒	Flush with sidewalk or slightly above any grassy area.
❒	❒	Installed behind curb or other protection to prevent damage (e.g. snowplow)
		RISER POLE
❒	❒	90° BEND AND straight pipe galvanized steel conduit.
❒	❒	Steel-PVC adapter and steel sweep shall not be encased.
❒	❒	Ground clamp installed with tap.

**NOTE Y – Acceptable N – Deficient*

35.4 TRANSFORMER FOUNDATION INSPECTION CHECK LIST

Do not pour concrete prior to inspection and approval by Company of the pad forming and reinforcement, the subgrade preparation, and the ground grid. Do not back fill after removing the forms prior to pad inspection. Every item listed below must be inspected and checked off by Company inspector.

N*	Y*	
		PRE-INSTALLATION
❒	❒	Proposed location within 10' of paved way open to vehicular access.
❒	❒	Proposed location has minimum of 10' clear space in front of transformer doors.
❒	❒	Proposed location has minimum clearance to buildings, doorways, windows, ventilation ducts, fire escapes, and other combustibles as per pages 14 and 15 of this guide.
❒	❒	Bollard locations are identified by Company.
❒	❒	Ground grid installation and two ground rods
		PRE-POURING
❒	❒	12" gravel and 2" sand below pad location.
❒	❒	Reinforcing bars.
❒	❒	Concrete forms correct height, size, orientation, opening, etc.
❒	❒	Concrete forms in correct location.
❒	❒	Ground grid installation and two ground rods.
❒	❒	36" radius at all 90° sweeps into pad stopping 1" above pad.
❒	❒	Secondary sweeps in place and proper number.
		AFTER POURING *(after removing forms and prior to backfilling)*
❒	❒	Pad correctly formed and 10” high.
❒	❒	¾" chamfer along the edges. Sweeps 1" above pad.
		AFTER BACKFILL
❒	❒	6" protective bollards are correctly installed.
❒	❒	Pad 5" above final grade.
❒	❒	Pad has 10' of clear space in front of transformer doors, is 10' from an accessible paved way and has the minimum clearance to other structures.

**NOTE Y – Acceptable N – Deficient*

36.0 Cable Installation Maximum Pull Chart

Straight cable pull chart typical maximum pulls						
	15kV Class			35kV Class		
Wire Size	Riser to Pad	Riser to Pull Box	Pull box to Pull Box	Riser to Pad	Riser to Pull Box	Pull box to Pull Box
#2 AL	530	605	750	n.a.	n.a.	n.a.
1/0 AL	n.a.	n.a.	n.a.	320	360	750
2/0 CU	n.a.	n.a.	n.a.	615	695	750
4/0 CU	695	720	750	n.a.	n.a.	n.a.

Note:

1) All Calculations are based on a straight pulls
2) All conduits are 4”
3) Assume 50Lb reel drag
4) Assume .5 for coefficient of friction
5) Pulls are in feet
6) Pulls distances are shown from worst case pulling end.

37.0 Padmount Compartment Sealing Requirement

Issued by Standards #09-09

Safety
Standards
Work Methods

THREE PHASE PADMOUNTED TRANSFORMER SEALING

Padmounted transformer compartment areas shall be sealed to minimize the direct release of transformer fluid into the ground through the primary and secondary compartment areas of the transformer. Sealing the compartment areas will better contain the release, allowing the fluid to be noticed more promptly.

The following describes how to seal the compartments areas. Compartment areas shall be filled with sand to a grade of 4" below the top of the concrete pad. On top of the sand a concrete grout (no aggregate) or expanding foam (STD Item UF10) shall be installed to the top to the concrete pad. The installer of the transformer pad and conduit is required to seal the compartment areas. All conduits shall also be filled in with expanding foam. The customer is required to seal all conduits where they are installing customer owned cables, this includes the spare conduits in that duct bank. The company is required to seal all conduits where they are installing company owned cables, this includes the spare conduits in that duct bank. This detail is further explained in the Underground Construction Standards book in section 44.20. Note: Keep the expanding foam stored in a heated environment to make applying easier.

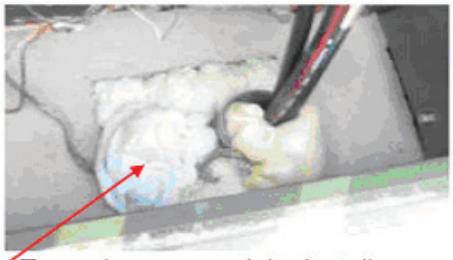

To seal spare conduit , install rag and fill with the expanding foam.

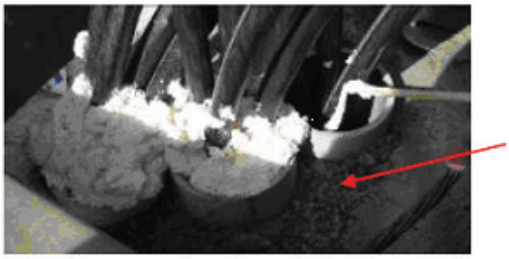

Grouted Area

Apply expanding foam in between all cables to form a complete seal.

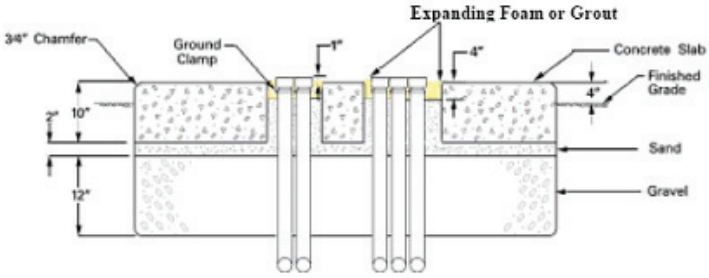

Cross section view of a padmounted transformer having primary and secondary compartments filled with sand and Expanding Foam.

38.0 Revision History

Version	Date	Description of Revision
1.0	07/19/10	New document superseding all previous versions of ESB 759B.

National Grid is an international energy delivery company. In the U.S., National Grid delivers electricity to approximately 3.3 million customers in Massachusetts, New Hampshire, New York and Rhode Island, and manages the electricity network on Long Island under an agreement with the Long Island Power Authority (LIPA). It is the largest distributor of natural gas in the northeastern U.S., serving approximately 3.4 million customers in Massachusetts, New Hampshire, New York and Rhode Island. National Grid also owns over 4,000 megawatts of contracted electricity generation that provides power to over one million LIPA customers.

National Grid
40 Sylvan Road
Waltham, MA 02451-1120
1-800-322-3223 New England
1-800-642-4272 New York
www.nationalgridus.com

nationalgrid
The power of action.℠

CM4518_759B 9/10

Printed on recycled paper

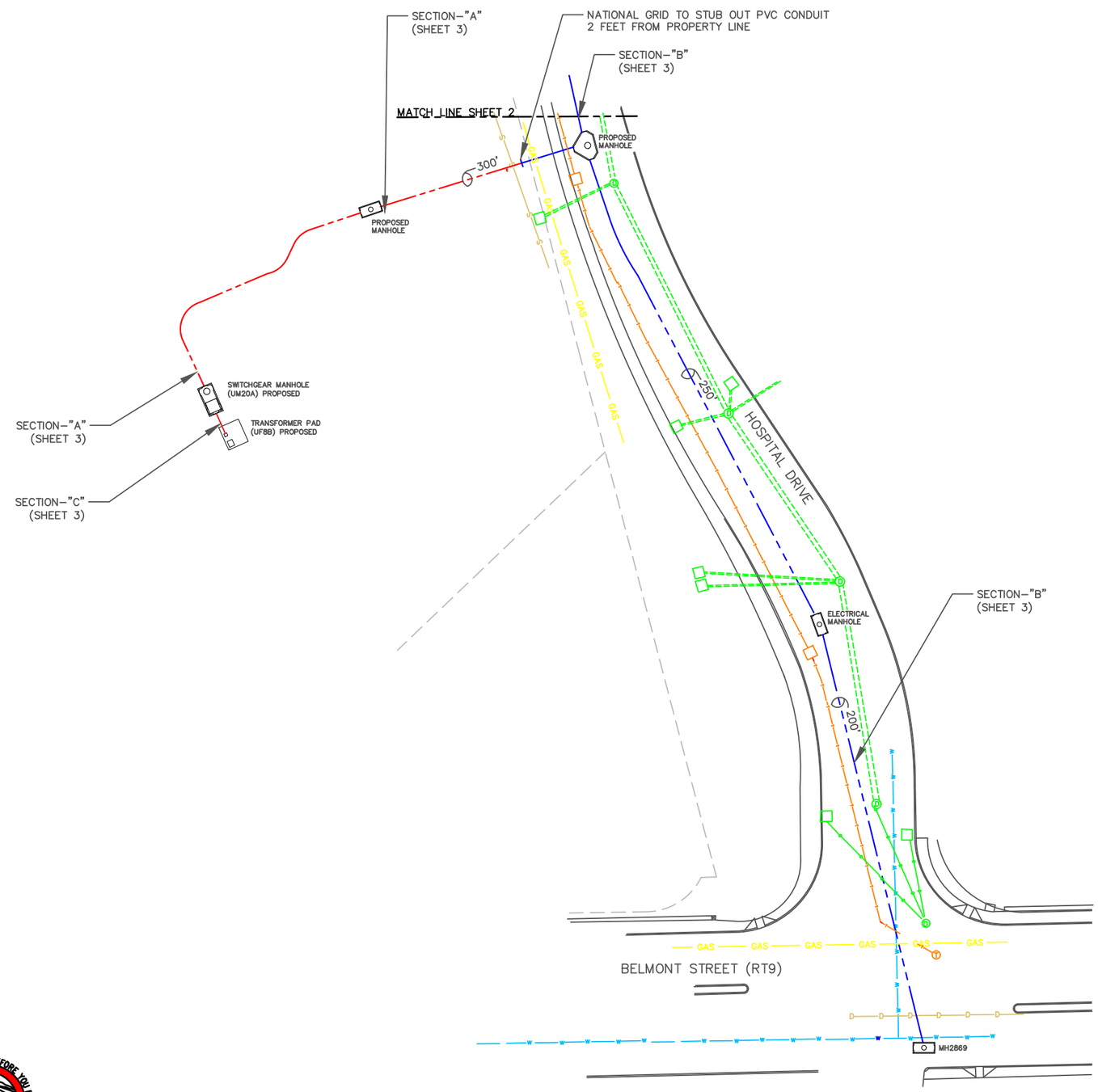

NOTES:

1. SPECIFICATIONS FOR ELECTRICAL INSTALLATION FOR NATIONAL GRID REFERENCE ELECTRICAL SYSTEM BULLETIN NO.759B.

LEGEND:

- MH–14 X 17–2 WAY
- MH–13 X 10–3 WAY
- SWITCHGEAR MANHOLE (UM20A)
- MH–13 X 10–3 WAY (UF8B)
- 5IN. NATIONALGRID PVC CONDUIT
- 5IN. CUSTOMER PVC CONDUIT
- 4IN. CUSTOMER PVC CONDUIT
- SEWER
- WATER
- GAS
- DRAINAGE
- SEWER
- TELEPHONE

CALL DIG-SAFE BEFORE YOU DIG 811

REVISIONS					
REV	DATE	DESCRIPTION	BY	RVWD	APVD

WORK # 29760512
PROJ. #
FILENAME: 28546141–1

nationalgrid

WUXI

305 BELMONT STREET WORCESTER ST.

SCALE NONE | DATE 8.12.2020 | BY M.A. | RV —— | AP M.A.

SHEET 1 OF 4

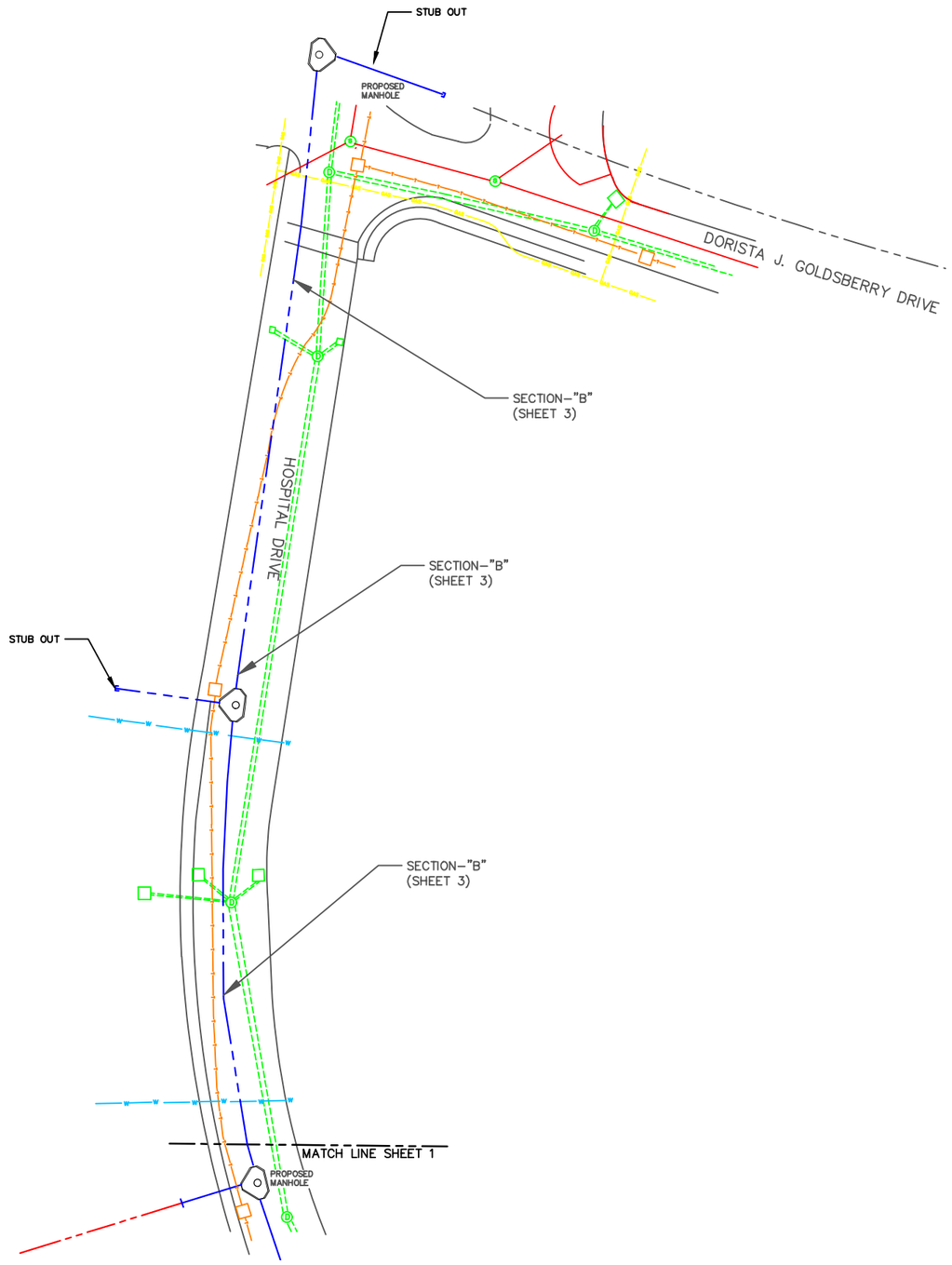

NOTES:

1. SPECIFICATIONS FOR ELECTRICAL INSTALLATION FOR NATIONAL GRID REFERENCE ELECTRICAL SYSTEM BULLETIN NO.759B.

LEGEND:

- MH–14 X 17–2 WAY
- MH–13 X 10–3 WAY
- SWITCHGEAR MANHOLE (UM20A)
- MH–13 X 10–3 WAY (UF8B)
- 5IN. NATIONALGRID PVC CONDUIT
- 5IN. CUSTOMER PVC CONDUIT
- 4IN. CUSTOMER PVC CONDUIT
- SEWER
- WATER
- GAS
- DRAINAGE
- SEWER
- TELEPHONE

CALL DIG-SAFE BEFORE YOU DIG 811

REVISIONS

REV	DATE	DESCRIPTION	BY	RVWD	APVD

WORK # 29760512
PROJ. #
FILENAME: 28546141–1

nationalgrid

WUXI

305 BELMONT STREET WORCESTER ST.

SCALE NONE | DATE 8.12.2020 | BY M.A. | RV —— | AP M.A.

SHEET 2 OF 4

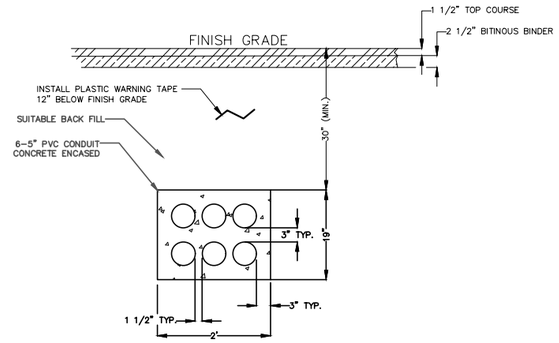

SECTION–"A"
SCALE: NOTE TO SCALE

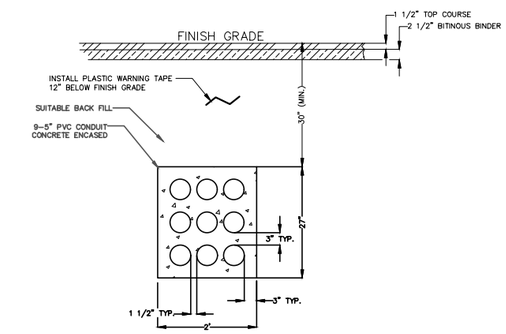

SECTION–"B"
SCALE: NOTE TO SCALE

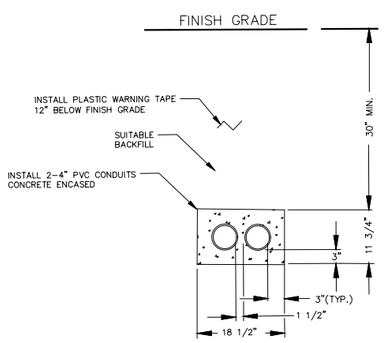

SECTION–"C"
SCALE: NOTE TO SCALE

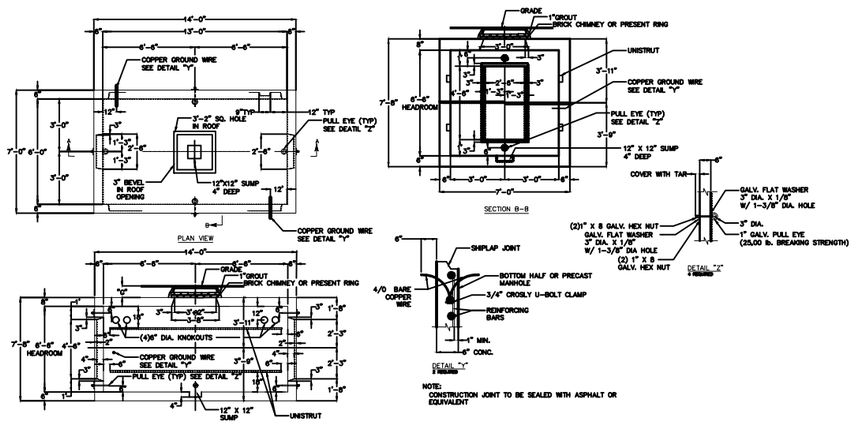

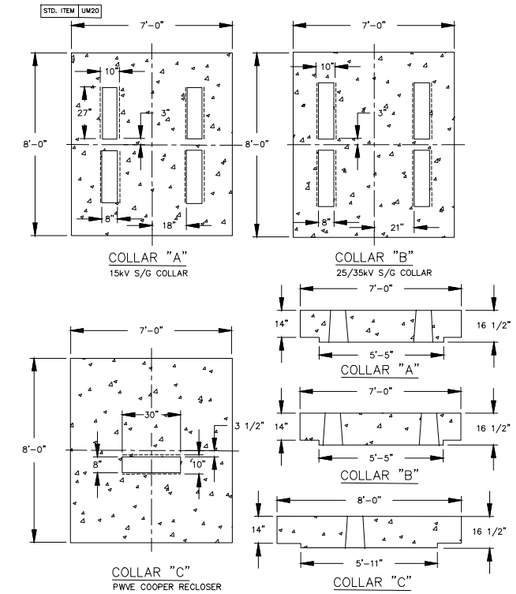

PRECAST CONCRETE MANHOLES SWITCHGEAR MANHOLE – 6 FEET X 13 FEET (INSIDE)			
2/06	33–112		

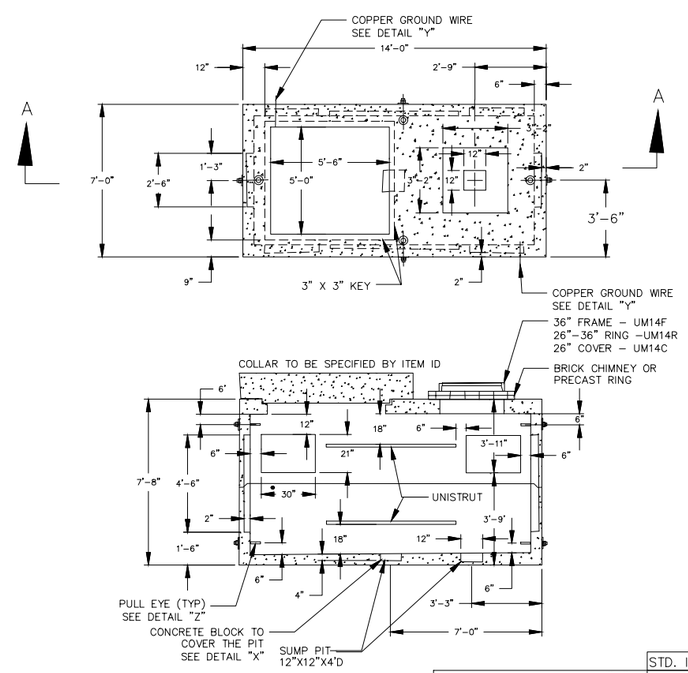

SECTION A–A

	STD. ITEM
WITH SPECIFIED COLLAR "A"	UM20A
WITH SPECIFIED COLLAR "B"	UM20B
WITH SPECIFIED COLLAR "C"	UM20C
WITH SPECIFIED COLLAR "E"	UM20E
WITH SPECIFIED COLLAR "M"	UM20M

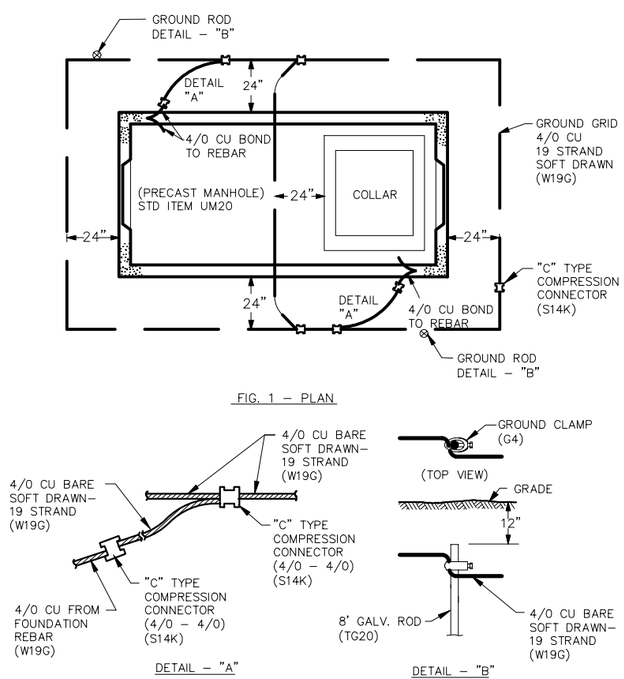

FIG. 1 – PLAN

PRECAST CONCRETE MANHOLES SWITCHGEAR MANHOLE – 6 FEET X 13 FEET (INSIDE)		
	PAGE NUMBER	ISSUE
	33–111	7/15

REVISIONS

REV	DATE	DESCRIPTION	BY	RVWD	APVD

WORK # 29760512
PROJ. #
FILENAME: 28546141–1

nationalgrid

WUXI

305 BELMONT STREET WORCESTER ST.

SCALE NONE | DATE 8.12.2020 | BY M.A. | RV —— | AP M.A.

CALL DIG-SAFE BEFORE YOU DIG 811

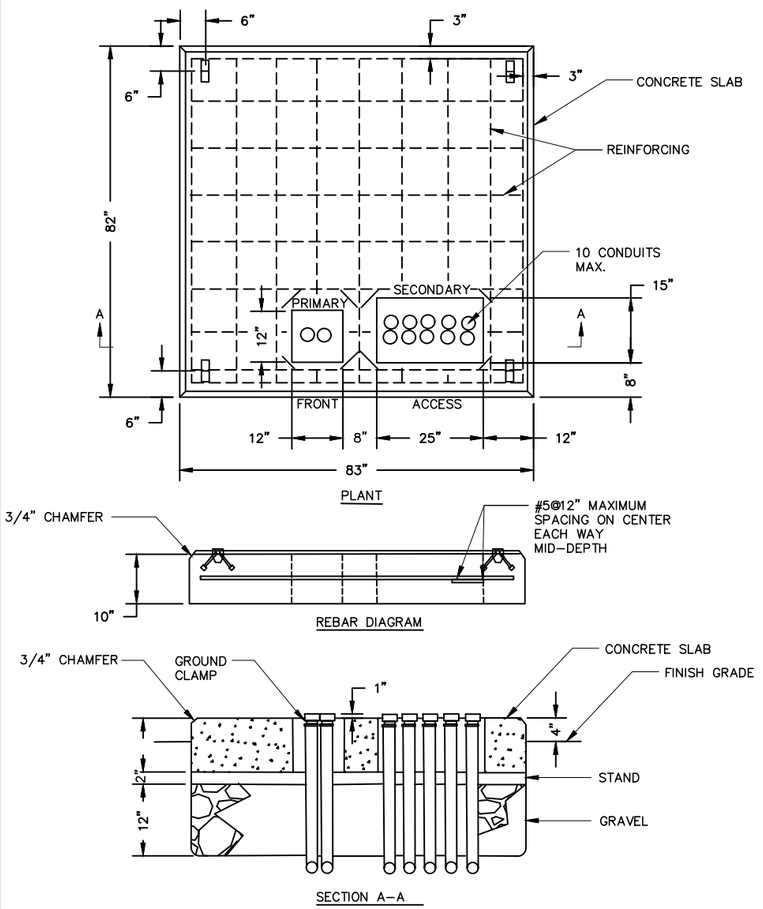

CONCRETE SLAB FOR 750-2500kVA THREE PHASE TRANSFORMERS 15kV CIRCUITS		
UF8B	PAGE NUMBER	ISSUE
	44-114	7/11

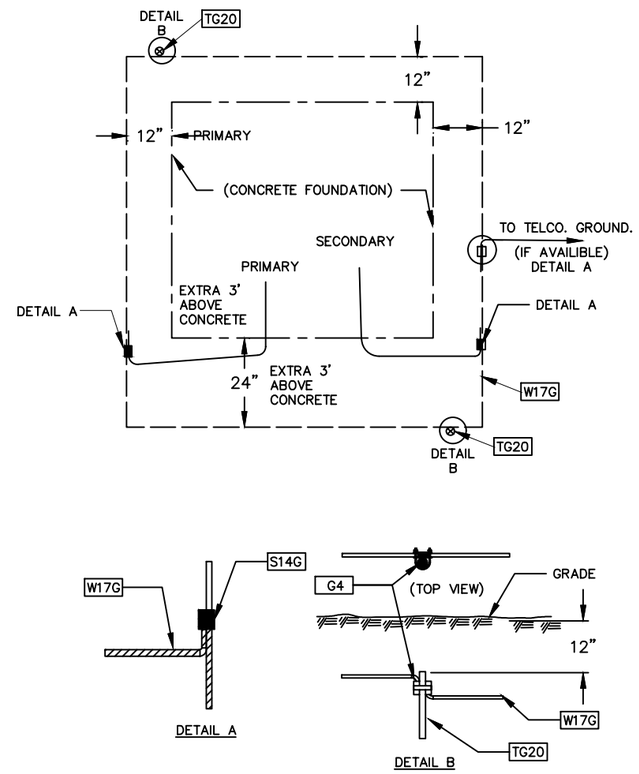

GROUND GRID INSTALLATION DETAIL			
	PAGE NUMBER	UNDERGROUND CONSTRUCTION STANDARD	
7/11	44-117		

STD. ITEM | UM23

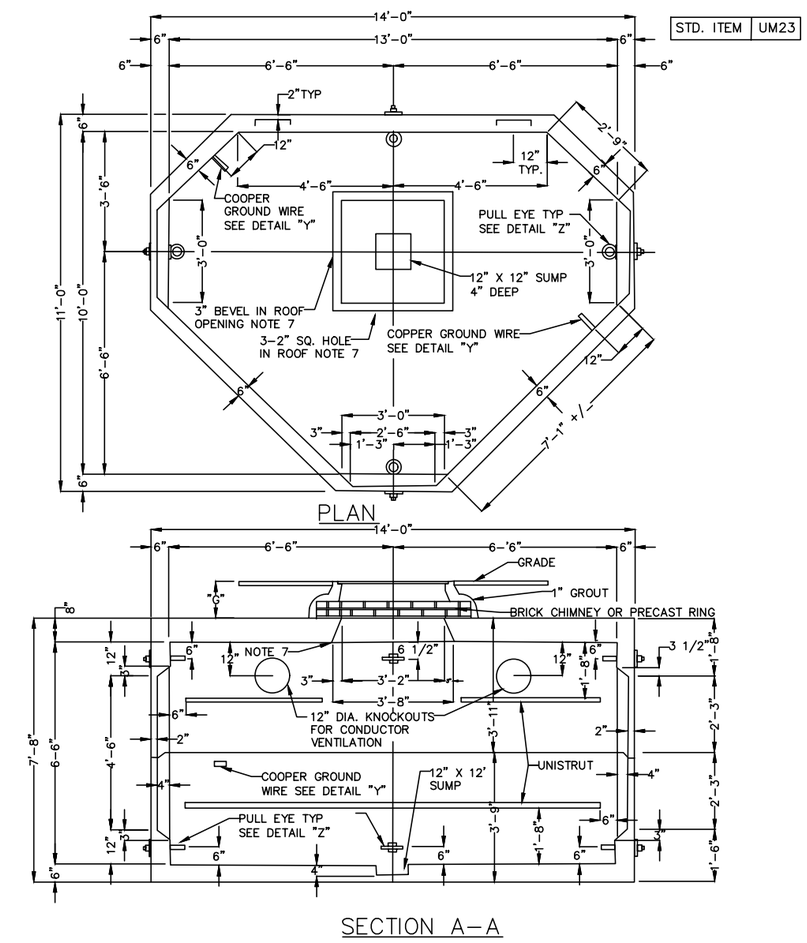

PRECAST CONCRETE MANHOLE 3 WAY DISTRIBUTION – 10 FEET X 13 FEET (INSIDE)			
		PAGE NUMBER	ISSUE
		33-105	7/18

CALL DIG-SAFE BEFORE YOU DIG 811

REVISIONS					
REV	DATE	DESCRIPTION	BY	RVWD	APVD

WORK # 29760512
PROJ. #
FILENAME: 28546141-1

nationalgrid

WUXI

305 BELMONT STREET WORCESTER ST.

SCALE NONE | DATE 8.12.2020 | BY M.A. | RV —— | AP M.A.