CITY OF WORCESTER
DEPARTMENT OF PUBLIC WORKS & PARKS

STANDARD SPECIFICATIONS
&
DETAILS

February 1, 2020

TABLE OF CONTENTS

SECTION 000 - SPECIFICATIONS 1-0

SECTION 100 - EARTHWORK 1-1

ITEM 100 CLEARING & GRUBBING 1-1
ITEM 104 TREE REMOVAL (LESS THAN 24 INCHES) INCLUDING STUMP 1-1
ITEM 106 TREE REMOVAL (24 INCHES & OVER) INCLUDING STUMP 1-1
ITEM 107 STREET TREE REPLACEMENT 1-1
ITEM 108 STUMP REMOVED (LESS THAN 24 INCHES) 1-1
ITEM 109 STUMP REMOVED (GREATER THAN 24 INCHES) 1-1
ITEM 111 HEDGE, REMOVE AND RESET 1-3
ITEM 111.1 BUSHES, REMOVE AND RESET 1-3
ITEM 112 UNCLASSIFIED EXCAVATION & BACKFILL 1-3
ITEM 112.1 UNCLASSIFIED EXCAVATION & BACKFILL (HOURLY RATE) 1-4
ITEM 116 EXCAVATION 1-4
ITEM 118 CLASS "A" ROCK EXCAVATION AND DISPOSAL 1-6
ITEM 120 CLASS "B" ROCK EXCAVATION AND DISPOSAL 1-6
ITEM 121 TRENCH ROCK EXCAVATION AND DISPOSAL 1-6
ITEM 122 EARTH EXCAVATION BELOW NORMAL GRADE 1-8
ITEM 123 STRUCTURES ABANDONED OR REMOVED 1-8
ITEM 124 ORDINARY BORROW/SELECTED COMMON FILL 1-8
ITEM 125 SAND BORROW 1-9
ITEM 126 GRAVEL BORROW 1-9
ITEM 128 SCREENED LOAM BORROW 1-9
ITEM 130 CRUSHED STONE 3/4 INCH 1-10
ITEM 131 CRUSHED STONE 3/4 INCH WITH HEAVY DUTY WEED BLOCK 1-10
ITEM 132 CRUSHED STONE 1-1/2 INCH 1-10
ITEM 134 RIP RAP 1-10
ITEM 135 DUMPED RIP RAP 1-10
ITEM 138 STONE FOR PIPE ENDS 1-10
ITEM 150 FURNISH AND SPREAD CALCIUM CHLORIDE 1-10
ITEM 154 TOPSOIL EXCAVATED AND STACKED 1-10
ITEM 155 TOPSOIL REHANDLED AND SPREAD 1-10
ITEM 156 SEEDING 1-11
ITEM 158 SODDING 1-11
ITEM 160 CLEANING UP 1-11
ITEM 165 SHEETING LEFT IN PLACE 1-11
ITEM 170 COMPLY WITH THE CONSERVATION COMMISSIONS ORDER OF CONDITIONS 1-12
ITEM 171 INSTALLATION AND MAINTENANCE OF EROSION CONTROLS 1-12

SECTION 200 - TRENCH PIPE WORK 2-1

ITEM 210.08 CLEAN AND CCTV 8” PIPE 2-1
ITEM 210.10 CLEAN AND CCTV 10” PIPE 2-1
ITEM 210.12 CLEAN AND CCTV 12” PIPE 2-1
ITEM 210.15 CLEAN AND CCTV 15” PIPE 2-1
ITEM 210.16 CLEAN AND CCTV 16” PIPE 2-1
ITEM 210.18 CLEAN AND CCTV 18” PIPE 2-1
ITEM 210.20 CLEAN AND CCTV 20” PIPE 2-1
ITEM 210.21 CLEAN AND CCTV 21” PIPE 2-1
ITEM 210.24 CLEAN AND CCTV 24” PIPE 2-1
ITEM 210.27 CLEAN AND CCTV 27” PIPE 2-1
ITEM 210.30 CLEAN AND CCTV 30” PIPE 2-1
ITEM 210.32 CLEAN AND CCTV 32” PIPE 2-1
ITEM 210.33 CLEAN AND CCTV 33” PIPE 2-1
ITEM 210.34 CLEAN AND CCTV 34” PIPE 2-1
ITEM 210.36 CLEAN AND CCTV 36” PIPE 2-1
ITEM 220.04 TRENCH EXCAVATION AND BACKFILL, FURNISH AND INSTALL 4" PVC 2-2
ITEM 220.06 TRENCH EXCAVATION AND BACKFILL, FURNISH AND INSTALL 6" PVC 2-3

ITEM 220.08 TRENCH EXCAVATION AND BACKFILL, FURNISH AND INSTALL 8" PVC 2-3
ITEM 220.10 TRENCH EXCAVATION AND BACKFILL FURNISH AND INSTALL 10" PVC 2-3
ITEM 220.12 TRENCH EXCAVATION AND BACKFILL, FURNISH AND INSTALL 12" PVC 2-3
ITEM 220.15 TRENCH EXCAVATION AND BACKFILL, FURNISH AND INSTALL 15" PVC 2-3
ITEM 220.18 TRENCH EXCAVATION AND BACKFILL, FURNISH AND INSTALL 18" PVC 2-3
ITEM 220.21 TRENCH EXCAVATION AND BACKFILL, FURNISH AND INSTALL 21" PVC 2-3
ITEM 220.24 TRENCH EXCAVATION AND BACKFILL, FURNISH AND INSTALL 24" PVC 2-3
ITEM 221.0812 TRENCH EXCAVATION AND BACKFILL, FURNISH AND INSTALL 8" PVC & 12" RCP 2-3
ITEM 221.0815 TRENCH EXCAVATION AND BACKFILL, FURNISH AND INSTALL 8" PVC & 15" RCP 2-3
ITEM 221.0818 TRENCH EXCAVATION AND BACKFILL, FURNISH AND INSTALL 8" PVC & 18" RCP 2-3
ITEM 221.0821 TRENCH EXCAVATION AND BACKFILL, FURNISH AND INSTALL 8" PVC & 21" RCP 2-3
ITEM 221.0824 TRENCH EXCAVATION AND BACKFILL, FURNISH AND INSTALL 8" PVC & 24" RCP 2-3
ITEM 221.0827 TRENCH EXCAVATION AND BACKFILL, FURNISH AND INSTALL 8" PVC & 27" RCP 2-3
ITEM 221.0830 TRENCH EXCAVATION AND BACKFILL, FURNISH AND INSTALL 8" PVC & 30" RCP 2-3
ITEM 221.0836 TRENCH EXCAVATION AND BACKFILL, FURNISH AND INSTALL 8" PVC & 36" RCP 2-3
ITEM 221.0842 TRENCH EXCAVATION AND BACKFILL, FURNISH AND INSTALL 8" PVC & 42" RCP 2-3
ITEM 221.1012 TRENCH EXCAVATION AND BACKFILL, FURNISH AND INSTALL 10" PVC & 12" RCP 2-3
ITEM 221.1015 TRENCH EXCAVATION AND BACKFILL, FURNISH AND INSTALL 10" PVC & 15" RCP 2-3
ITEM 221.1018 TRENCH EXCAVATION AND BACKFILL, FURNISH AND INSTALL 10" PVC & 18" RCP 2-3
ITEM 221.1021 TRENCH EXCAVATION AND BACKFILL, FURNISH AND INSTALL 10" PVC & 21" RCP 2-3
ITEM 221.1024 TRENCH EXCAVATION AND BACKFILL, FURNISH AND INSTALL 10" PVC & 24" RCP 2-3
ITEM 221.1027 TRENCH EXCAVATION AND BACKFILL, FURNISH AND INSTALL 10" PVC & 27" RCP 2-3
ITEM 221.1030 TRENCH EXCAVATION AND BACKFILL, FURNISH AND INSTALL 10" PVC & 30" RCP 2-3
ITEM 221.1036 TRENCH EXCAVATION AND BACKFILL, FURNISH AND INSTALL 10" PVC & 36" RCP 2-3
ITEM 221.1042 TRENCH EXCAVATION AND BACKFILL, FURNISH AND INSTALL 10" PVC & 42" RCP 2-3
ITEM 221.1212 TRENCH EXCAVATION AND BACKFILL, FURNISH AND INSTALL 12” PVC & 12" RCP 2-3
ITEM 221.1215 TRENCH EXCAVATION AND BACKFILL, FURNISH AND INSTALL 12" PVC & 15" RCP 2-3
ITEM 221.1218 TRENCH EXCAVATION AND BACKFILL, FURNISH AND INSTALL 12" PVC & 18" RCP 2-3
ITEM 221.1221 TRENCH EXCAVATION AND BACKFILL, FURNISH AND INSTALL 12" PVC & 21" RCP 2-3
ITEM 221.1224 TRENCH EXCAVATION AND BACKFILL, FURNISH AND INSTALL 12" PVC & 24" RCP 2-3
ITEM 221.1227 TRENCH EXCAVATION AND BACKFILL, FURNISH AND INSTALL 12" PVC & 27" RCP 2-3
ITEM 221.1230 TRENCH EXCAVATION AND BACKFILL, FURNISH AND INSTALL 12" PVC & 30" RCP 2-3
ITEM 221.1236 TRENCH EXCAVATION AND BACKFILL, FURNISH AND INSTALL 12" PVC & 36" RCP 2-3
ITEM 221.1242 TRENCH EXCAVATION AND BACKFILL, FURNISH AND INSTALL 12" PVC & 42" RCP 2-3
ITEM 221.1515 TRENCH EXCAVATION AND BACKFILL, FURNISH AND INSTALL 15" PVC & 15" RCP 2-3
ITEM 221.1518 TRENCH EXCAVATION AND BACKFILL, FURNISH AND INSTALL 15" PVC & 18" RCP 2-3
ITEM 221.1521 TRENCH EXCAVATION AND BACKFILL, FURNISH AND INSTALL 15" PVC & 21" RCP 2-3
ITEM 221.1524 TRENCH EXCAVATION AND BACKFILL, FURNISH AND INSTALL 15" PVC & 24" RCP 2-3
ITEM 221.1527 TRENCH EXCAVATION AND BACKFILL, FURNISH AND INSTALL 15" PVC & 27" RCP 2-3
ITEM 221.1530 TRENCH EXCAVATION AND BACKFILL, FURNISH AND INSTALL 15" PVC & 30" RCP 2-4
ITEM 221.1536 TRENCH EXCAVATION AND BACKFILL, FURNISH AND INSTALL 15" PVC & 36" RCP 2-4
ITEM 221.1542 TRENCH EXCAVATION AND BACKFILL, FURNISH AND INSTALL 15" PVC & 42" RCP 2-4
ITEM 221.1818 TRENCH EXCAVATION AND BACKFILL, FURNISH AND INSTALL 18" PVC & 18" RCP 2-4
ITEM 221.1821 TRENCH EXCAVATION AND BACKFILL, FURNISH AND INSTALL 18" PVC & 21" RCP 2-4
ITEM 221.1824 TRENCH EXCAVATION AND BACKFILL, FURNISH AND INSTALL 18" PVC & 24" RCP 2-4
ITEM 221.1827 TRENCH EXCAVATION AND BACKFILL, FURNISH AND INSTALL 18" PVC & 27" RCP 2-4
ITEM 221.1830 TRENCH EXCAVATION AND BACKFILL, FURNISH AND INSTALL 18" PVC & 30" RCP 2-4
ITEM 221.1836 TRENCH EXCAVATION AND BACKFILL, FURNISH AND INSTALL 18" PVC & 36" RCP 2-4
ITEM 221.1842 TRENCH EXCAVATION AND BACKFILL, FURNISH AND INSTALL 18" PVC & 42" RCP 2-4
ITEM 221.2118 TRENCH EXCAVATION AND BACKFILL, FURNISH AND INSTALL 21" PVC & 18" RCP 2-4
ITEM 221.2121 TRENCH EXCAVATION AND BACKFILL, FURNISH AND INSTALL 21" PVC & 21" RCP 2-4
ITEM 221.2124 TRENCH EXCAVATION AND BACKFILL, FURNISH AND INSTALL 21" PVC & 24" RCP 2-4
ITEM 221.2127 TRENCH EXCAVATION AND BACKFILL, FURNISH AND INSTALL 21" PVC & 27" RCP 2-4
ITEM 221.2130 TRENCH EXCAVATION AND BACKFILL, FURNISH AND INSTALL 21" PVC & 30" RCP 2-4
ITEM 221.2136 TRENCH EXCAVATION AND BACKFILL, FURNISH AND INSTALL 21" PVC & 36" RCP 2-4
ITEM 221.2142 TRENCH EXCAVATION AND BACKFILL, FURNISH AND INSTALL 21" PVC & 42" RCP 2-4
ITEM 222.12 TRENCH EXCAVATION AND BACKFILL, FURNISH AND INSTALL 12" RCP 2-4
ITEM 222.15 TRENCH EXCAVATION AND BACKFILL, FURNISH AND INSTALL 15" RCP 2-4
ITEM 222.18 TRENCH EXCAVATION AND BACKFILL, FURNISH AND INSTALL 18" RCP 2-4

ITEM 222.21 TRENCH EXCAVATION AND BACKFILL, FURNISH AND INSTALL 21" RCP 2-4
ITEM 222.24 TRENCH EXCAVATION AND BACKFILL, FURNISH AND INSTALL 24" RCP 2-4
ITEM 222.27 TRENCH EXCAVATION AND BACKFILL, FURNISH AND INSTALL 27" RCP 2-4
ITEM 222.30 TRENCH EXCAVATION AND BACKFILL, FURNISH AND INSTALL 30" RCP 2-4
ITEM 222.36 TRENCH EXCAVATION AND BACKFILL, FURNISH AND INSTALL 36" RCP 2-4
ITEM 222.42 TRENCH EXCAVATION AND BACKFILL, FURNISH AND INSTALL 42" RCP 2-4
ITEM 222.66 TRENCH EXCAVATION AND BACKFILL, FURNISH AND INSTALL 66" RCP 2-4
ITEM 222.36 TRENCH EXCAVATION AND BACKFILL, FURNISH AND INSTALL 36" RCP 2-4
ITEM 222.72 TRENCH EXCAVATION AND BACKFILL, FURNISH AND INSTALL 72" RCP 2-4
ITEM 222.84 TRENCH EXCAVATION AND BACKFILL, FURNISH AND INSTALL 84" RCP 2-4
ITEM 223.18 TRENCH EXCAVATION AND BACKFILL, FURNISH AND INSTALL 18" RCP EPOXY COATED 2-4
ITEM 223.21 TRENCH EXCAVATION AND BACKFILL, FURNISH AND INSTALL 21" RCP EPOXY COATED 2-4
ITEM 223.24 TRENCH EXCAVATION AND BACKFILL, FURNISH AND INSTALL 24" RCP EPOXY COATED 2-4
ITEM 223.27 TRENCH EXCAVATION AND BACKFILL, FURNISH AND INSTALL 27" RCP EPOXY COATED 2-4
ITEM 223.30 TRENCH EXCAVATION AND BACKFILL, FURNISH AND INSTALL 30" RCP EPOXY COATED 2-4
ITEM 223.36 TRENCH EXCAVATION AND BACKFILL, FURNISH AND INSTALL 36" RCP EPOXY COATED 2-4
ITEM 223.42 TRENCH EXCAVATION AND BACKFILL, FURNISH AND INSTALL 42" RCP EPOXY COATED 2-5
ITEM 223.48 TRENCH EXCAVATION AND BACKFILL, FURNISH AND INSTALL 48" RCP EPOXY COATED 2-5
ITEM 223.54 TRENCH EXCAVATION AND BACKFILL, FURNISH AND INSTALL 54" RCP EPOXY COATED 2-5
ITEM 224 CONNECTIONS 2-21
ITEM 225.08 8 INCH CATCH BASIN CONNECTION 2-21
ITEM 225.12 12 INCH CATCH BASIN CONNECTION 2-21
ITEM 226.015 TRENCH EXCAVATION & BACKFILL, FURNISH AND INSTALL1.5” PVC FORCE MAIN 2-21
ITEM 226.02 TRENCH EXCAVATION & BACKFILL, FURNISH AND INSTALL 2” PVC FORCE MAIN 2-21
ITEM 227 SERVICE CURB STOP AND ROD BOX FOR LOW PRESSURE SEWER FORCE MAINS 2-23
ITEM 227.125 LOW PRESSURE SEWER LATERAL HOUSE CONNECTIONS AND VALVES 2-25
ITEM 230.4 4' MANHOLE BASE 2-25
ITEM 230.5 5' MANHOLE BASE 2-25
ITEM 230.6 6' MANHOLE BASE 2-25
ITEM 230.7 7' MANHOLE BASE 2-25
ITEM 230.8 8' MANHOLE BASE 2-25
ITEM 231.4 4' MANHOLE SECTION 2-25
ITEM 231.5 5' MANHOLE SECTION 2-25
ITEM 231.6 6' MANHOLE SECTION 2-25
ITEM 231.7 7' MANHOLE SECTION 2-25
ITEM 231.8 8' MANHOLE SECTION 2-25
ITEM 232.1 MITER BEND MANHOLE TEE 2-25
ITEM 232.2 FLAT MANHOLE TEE 2-25
ITEM 233 REMODEL EXISTING MANHOLE 2-35
ITEM 233.1 REMODEL EXISTING MANHOLES FOR LOW PRESSURE SEWER FORCE MAIN INSTALLATION 2-35
ITEM 235 CATCH BASIN FRAME & GRATE 2-37
ITEM 236 MANHOLE FRAME & COVER 2-37
ITEM 237.08 8 INCH OUTSIDE MANHOLE DROP 2-41
ITEM 237.10 10 INCH OUTSIDE MANHOLE DROP 2-41
ITEM 237.12 12 INCH OUTSIDE MANHOLE DROP 2-41
ITEM 237.15 15 INCH OUTSIDE MANHOLE DROP 2-41
ITEM 237.18 18 INCH OUTSIDE MANHOLE DROP 2-41
ITEM 238 6 INCH CHIMNEY 2-43
ITEM 239 TYPICAL TERMINAL CLEANOUT MANHOLE 2-45

ITEM 239.1 TYPICAL CLEANOUT MANHOLE 2-45
ITEM 240 WORCESTER STANDARD CATCH BASIN (5 FOOT DIAMETER) 2-47
ITEM 241 CATCH BASIN ALTERNATE TYPE 2-49
ITEM 241.1 DROP INLET 2-49
ITEM 242 CATCH BASIN REBUILD "D" FRAME TO SQUARE FRAME 2-52
ITEM 243 CATCH BASIN REBUILD BORDERSTONE TO SQUARE FRAME 2-52
ITEM 244 REBUILD EXISTING CATCH BASINS TO ALTERNATE TYPE 2-52
ITEM 244.1 REBUILD EXISTING CATCH BASINS 2-52
ITEM 244.2 REMOVE AND DISPOSE OF EXISTING CATCH BASIN 2-52
ITEM 245 GRANITE INLET STONE 2-52
ITEM 245.1 EXISTING GRANITE INLET STONE REMOVE & RESET 2-52
ITEM 246 8 INCH GREEN TRAPS 2-55
ITEM 247 12 INCH GREEN TRAPS 2-55
ITEM 249 CATCH BASIN CLEANING 2-58
ITEM 250 MANHOLE FRAMES, REMOVE, PLATE & RETAIN 2-58
ITEM 252.1 MANHOLE ADJUSTMENT 12 INCH OR LESS GRAVEL 2-58
ITEM 252.2 MANHOLE ADJUSTMENT 12 INCH OR LESS RIGID 2-58
ITEM 253.1 MANHOLE ADJUSTMENT OVER 12 INCH GRAVEL 2-58
ITEM 253.2 MANHOLE ADJUSTMENT OVER 12 INCH RIGID 2-58
ITEM 254.1 CATCH BASIN ADJUST TO LINE AND/OR GRADE 12 INCH OR LESS, GRAVEL 2-59
ITEM 254.2 CATCH BASIN ADJUST TO LINE AND/OR GRADE 12 INCH OR LESS, RIGID 2-59
ITEM 255.1 CATCH BASIN ADJUST TO LINE AND/OR GRADE 12 INCH OR OVER, GRAVEL 2-59
ITEM 255.2 CATCH BASIN ADJUST TO LINE AND/OR GRADE 12 INCH OR OVER, RIGID 2-59
ITEM 260.06 6 INCH SUBDRAIN COMPLETE 2-60
ITEM 260.08 8 INCH SUBDRAIN COMPLETE 2-60
ITEM 261 REPAIR, REPLACE OR RELOCATE EXISTING DRAINS 2-62
ITEM 265 REMOVE AND DISPOSE OF EXISTING MANHOLE 2-62

SECTION 300 - WATER 3-1

ITEM 301.01 1” POLYETHYLENE TUBING L.F. 3-1
ITEM 301.015 1” COPPER TUBING L.F. 3-1
ITEM 301.02 2” COPPER TUBING L.F. 3-1
ITEM 301.04 4” ZINC COATED CLDI PIPE L.F. 3-1
ITEM 301.06 6” ZINC COATED CLDI PIPE L.F. 3-1
ITEM 301.08 8” ZINC COATED CLDI PIPE L.F. 3-1
ITEM 301.10 10” ZINC COATED CLDI PIPE L.F. 3-1
ITEM 301.12 12” ZINC COATED CLDI PIPE L.F. 3-1
ITEM 301.14 14” ZINC COATED CLDI PIPE L.F. 3-1
ITEM 301.16 16” ZINC COATED CLDI PIPE L.F. 3-1
ITEM 301.18 18” ZINC COATED CLDI PIPE L.F. 3-1
ITEM 301.20 20” ZINC COATED CLDI PIPE L.F. 3-1
ITEM 301.24 24” ZINC COATED CLDI PIPE L.F. 3-1
ITEM 301.30 30” ZINC COATED CLDI PIPE L.F. 3-1
ITEM 301.36 36” ZINC COATED CLDI PIPE L.F. 3-1
ITEM 301.50 POLYETHYLENE WRAP FOR DI PIPE L.F. 3-1
ITEM 302.1 CAST OR DUCTILE FITTINGS LBS. 3-7
ITEM 302.0804 8”X4” CUT-IN TEE EA. 3-7
ITEM 302.0806 8”X6” CUT-IN TEE EA. 3-7
ITEM 302.0808 8”X8” CUT-IN TEE EA. 3-7
ITEM 302.1208 12”X8” CUT-IN TEE EA. 3-7
ITEM 302.1212 12”X12” CUT-IN TEE EA. 3-7
ITEM 302.1408 14”X8” CUT-IN TEE EA. 3-7
ITEM 302.1608 16”X8” CUT-IN TEE EA. 3-7
ITEM 302.1612 16”X12” CUT-IN TEE EA. 3-7
ITEM 303.0808 8”X8” CUT-IN CROSS EA. 3-7
ITEM 303.1208 12”X8” CUT-IN CROSS EA. 3-7
ITEM 304.01 VALVE BOX EA. 3-10
ITEM 304.02 SERVICE BOX EA. 3-10
ITEM 304.03 ADJUST CURB STOP TO GRADE EA. 3-10

ITEM 304.04 REPLACING 4" - 12" GATE VALVE BOX, GRAVEL BASE 3-10
ITEM 304.05 REPLACING 4" - 12" GATE VALVE BOX, RIGID BASE 3-10
ITEM 304.06 REMOVE AND RETAIN WATER BOX 3-10
ITEM 304.07 RETURN AND RESET WATER BOX 3-10
ITEM 304.08 WATER BOX ADJUST TO GRADE, GRAVEL BASE 3-11
ITEM 304.09 WATER BOX ADJUST TO GRADE, RIGID BASE 3-11
ITEM 304.10 LOWER STREET SERVICE BOX EA. 3-11
ITEM 305.02 2” BALL VALVE EA. 3-12
ITEM 305.04 4” GATE VALVE EA. 3-12
ITEM 305.06 6” GATE VALVE EA. 3-12
ITEM 305.08 8” GATE VALVE EA. 3-12
ITEM 305.10 10” GATE VALVE EA. 3-12
ITEM 305.12 12” GATE VALVE EA. 3-12
ITEM 306.06 6” CUT-IN GATE VALVE EA. 3-12
ITEM 306.08 8” CUT-IN GATE VALVE EA. 3-12
ITEM 306.12 12” CUT-IN GATE VALVE EA. 3-12
ITEM 307.14 14” BUTTERFLY VALVE EA. 3-12
ITEM 307.16 16” BUTTERFLY VALVE EA. 3-12
ITEM 307.18 18” BUTTERFLY VALVE EA. 3-12
ITEM 307.20 20” BUTTERFLY VALVE EA. 3-12
ITEM 307.24 24” BUTTERFLY VALVE EA. 3-12
ITEM 307.30 30” BUTTERFLY VALVE EA. 3-12
ITEM 307.36 36” BUTTERFLY VALVE EA. 3-12
ITEM 307.40 40” BUTTERFLY VALVE EA. 3-12
ITEM 307.48 48” BUTTERFLY VALVE EA. 3-12
ITEM 308.16 16” CUT-IN BUTTERFLY VALVE EA. 3-12
ITEM 309.1 SERVICE CONNECTION EA. 3-16
ITEM 309.2 SERVICE BOX AND CURB STOP EA. 3-16
ITEM 309.3 SERVICE BOX AND CUT-IN CURB STOP (3/4" - 1") EA. 3-16
ITEM 309.4 SERVICE BOX AND CUT-IN CURB STOP (1 1/4" - 2") EA. 3-16
ITEM 309.5 SERVICE BOX AND CURB STOP 2” EA. 3-16
ITEM 310.1 NEW HYDRANT EA. 3-24
ITEM 310.3 HYDRANT REMOVED AND STACKED EA. 3-24
ITEM 310.4 HYDRANT REMOVED AND RESET EA. 3-24
ITEM 310.5 INSTALL NEW CITY SUPPLIED HYDRANT 3-24
ITEM 310.6 HYDRANT PAINTING 3-30
ITEM 311.02 2” TAP EA. 3-31
ITEM 311.04 4” TAPPING SLEEVE & VALVE EA. 3-31
ITEM 311.06 6” TAPPING SLEEVE & VALVE EA. 3-31
ITEM 311.08 8” TAPPING SLEEVE & VALVE EA. 3-31
ITEM 312.02 2” TIE-IN EA. 3-31
ITEM 312.03 3” TIE-IN EA. 3-31
ITEM 312.04 4” TIE-IN EA. 3-31
ITEM 312.06 6” TIE-IN EA. 3-31
ITEM 312.08 8” TIE-IN EA. 3-31
ITEM 312.10 10” TIE-IN EA. 3-31
ITEM 312.12 12” TIE-IN EA. 3-31
ITEM 312.14 14” TIE-IN EA. 3-31
ITEM 312.16 16” TIE-IN EA. 3-31
ITEM 312.20 20” TIE-IN EA. 3-31
ITEM 312.24 24” TIE-IN EA. 3-31
ITEM 312.30 30” TIE-IN EA. 3-31
ITEM 312.36 36” TIE-IN EA. 3-31
ITEM 313.1 THRUST BLOCK C.Y. 3-33
ITEM 313.2 THRUST BLOCK EA. 3-33
ITEM 314.1 1-1/4” AIR RELEASE VALVE EA. 3-39
ITEM 314.2 1” BLOW OFF EA. 3-39
ITEM 314.3 DIG AND PLUG EXISTING CONNECTION UP TO 2” EA. 3-39
ITEM 314.4 BLOW OFF MANHOLE EA. 3-39

ITEM 314.5 DIG AND PLUG EXISTING CONNECTION 3” AND LARGER EA. 3-39
ITEM 315.1 INDICATOR POST EA. 3-44
ITEM 316.02 TEMPORARY 2” BY-PASS L.F. 3-46
ITEM 316.04 TEMPORARY 4” BY-PASS L.F. 3-46
ITEM 316.06 TEMPORARY 6” BY-PASS L.F. 3-46
ITEM 317 TEMPORARY TAPS ON SERVICE LATERALS EA. 3-46
ITEM 318.06 CLEAN AND LINE 6” MAIN L.F. 3-49
ITEM 318.08 CLEAN AND LINE 8” MAIN L.F. 3-49
ITEM 318.10 CLEAN AND LINE 10” MAIN L.F. 3-49
ITEM 318.12 CLEAN AND LINE 12” MAIN L.F. 3-49
ITEM 318.14 CLEAN AND LINE 14” MAIN L.F. 3-49
ITEM 318.16 CLEAN AND LINE 16” MAIN L.F. 3-49
ITEM 318.18 CLEAN AND LINE 18” MAIN L.F. 3-49
ITEM 318.20 CLEAN AND LINE 20” MAIN L.F. 3-49
ITEM 318.24 CLEAN AND LINE 24” MAIN L.F. 3-49
ITEM 318.30 CLEAN AND LINE 30” MAIN L.F. 3-49
ITEM 318.36 CLEAN AND LINE 36” MAIN L.F. 3-49
ITEM 318.40 CLEAN AND LINE 40” MAIN L.F. 3-49
ITEM 318.42 CLEAN AND LINE 42” MAIN L.F. 3-49
ITEM 318.48 CLEAN AND LINE 48” MAIN L.F. 3-49
ITEM 319.06 REMOVE EXISTING VALVE AND/OR FITTING & INSTALL 6” CLDI PIPE EA. 3-49
ITEM 319.08 REMOVE EXISTING VALVE AND/OR FITTING & INSTALL 8” CLDI PIPE EA. 3-49
ITEM 319.10 REMOVE EXISTING VALVE AND/OR FITTING & INSTALL 10” CLDI PIPE EA. 3-49
ITEM 319.12 REMOVE EXISTING VALVE AND/OR FITTING & INSTALL 12” CLDI PIPE EA. 3-49
ITEM 319.14 REMOVE EXISTING VALVE AND/OR FITTING & INSTALL 14” CLDI PIPE EA. 3-49
ITEM 319.16 REMOVE EXISTING VALVE AND/OR FITTING & INSTALL 16” CLDI PIPE EA. 3-49
ITEM 319.18 REMOVE EXISTING VALVE AND/OR FITTING & INSTALL 18” CLDI PIPE EA. 3-49
ITEM 319.20 REMOVE EXISTING VALVE AND/OR FITTING & INSTALL 20” CLDI PIPE EA. 3-49
ITEM 319.24 REMOVE EXISTING VALVE AND/OR FITTING & INSTALL 24” CLDI PIPE EA. 3-49
ITEM 319.30 REMOVE EXISTING VALVE AND/OR FITTING & INSTALL 30” CLDI PIPE EA. 3-49
ITEM 319.36 REMOVE EXISTING VALVE AND/OR FITTING & INSTALL 36” CLDI PIPE EA. 3-49
ITEM 319.40 REMOVE EXISTING VALVE AND/OR FITTING & INSTALL 40” CLDI PIPE EA. 3-49
ITEM 319.42 REMOVE EXISTING VALVE AND/OR FITTING & INSTALL 42” CLDI PIPE EA. 3-49
ITEM 319.48 REMOVE EXISTING VALVE AND/OR FITTING & INSTALL 48” CLDI PIPE EA. 3-49
ITEM 320.0810 ADDITIONAL OPENINGS FOR 8” TO 10” MAINS EA. 3-49
ITEM 320.1216 ADDITIONAL OPENINGS FOR 12” TO 16” MAINS EA. 3-49
ITEM 320.1824 ADDITIONAL OPENINGS FOR 18” TO 24” MAINS EA. 3-50
ITEM 320.3036 ADDITIONAL OPENINGS FOR 30” TO 36” MAINS EA. 3-50
ITEM 320.4048 ADDITIONAL OPENINGS FOR 40” TO 48” MAINS EA. 3-50
ITEM 321.1 T.V. MAINS L.F. 3-55
ITEM 322.06 6” INSERTING VALVE EA. 3-55
ITEM 322.08 8” INSERTING VALVE EA. 3-55
ITEM 322.12 12” INSERTING VALVE EA. 3-56
ITEM 323 LINE STOP (VARIOUS SIZES) EA. 3-56

SECTION 400 - PAVEMENT 4-1

ITEM 402 FINE GRADING, ROLLING AND FINISHING 4-1
ITEM 403 GRINDING AND MILLING 1-1/2 INCH 4-1
ITEM 403.1 GRINDING (FULL DEPTH – 6” MAXIMUM) 4-1
ITEM 403.11 GRINDING IN-EXCESS OF 6” MAXIMUM 4-1
ITEM 403.2 GRINDING AND MILLING 2 INCH 4-2
ITEM 404 PULVI-MILLING 4-2
ITEM 405 STRAIGHT CURB (VA-4) 4-2
ITEM 408 CIRCULAR CURB (10' RADIUS & OVER) (VA-4) 4-2
ITEM 409 CIRCULAR CURB (10" RADIUS & UNDER) (VA-4) 4-2
ITEM 410 CIRCULAR CORNER (WORCESTER STANDARD) 4-2
ITEM 412 GRANITE EDGE (10' AND OVER) TYPE SB 4-2
ITEM 414 GRANITE EDGE (10' AND UNDER) TYPE SB 4-2
ITEM 416 CURB REMOVE & RESET 4-7

ITEM 417 COBBLESTONE CURB REMOVE & RESET 4-7
ITEM 418 CURB REMOVAL & STACK 4-7
ITEM 419 SAW CUTTING OF GRANITE CURB 4-7
ITEM 420 CURB RESET FROM DPW YARD 4-7
ITEM 422.1 SUPERPAVE 9.5 MM LEVEL 2 (TOP COURSE) 4-7
ITEM 422.2 SUPERPAVE 12.5 MM LEVEL 2 (BINDER COURSE) 4-7
ITEM 422.3 SUPERPAVE 12.5 MM LEVEL 3 (MODIFIED TOP COURSE) 4-7
ITEM 424 BITUMINOUS CONCRETE DRIVEWAY & VARIOUS AREA 4-7
ITEM 426 NEW BITUMINOUS CONCRETE SIDEWALKS 4-8
ITEM 427 BITUMINOUS CONCRETE WINTER CONDITIONS (HOT BOX) 4-8
ITEM 428 BITUMINOUS CONCRETE ROADWAY REPAIR 4-8
ITEM 430 EXISTING BITUMINOUS CONCRETE DRIVEWAY REPAIR 4-8
ITEM 432 EXISTING BITUMINOUS CONCRETE SIDEWALKS REPAIR 4-8
ITEM 432.1 EXISTING BITUMINOUS CONCRETE SIDEWALKS REPAIR < 25 L.F. 4-8
ITEM 434 SAWING PAVEMENT 4-43
ITEM 435 HOT POURED RUBBERIZED ASPHALT SEALER 4-44
ITEM 435.1 RANDOM CRACK SEALING 4-44
ITEM 435.2 RANDOM CRACK SEAL, FIBER METHOD 4-45
ITEM 436 RESURFACE TRENCHES TEMPORARY 4-47
ITEM 436.01 RESURFACE TRENCHES PERMANENT 4-47
ITEM 436.1 MISCELLANEOUS INFRARED BITUMINOUS CONCRETE 4-51
ITEM 437 SPEED HUMPS 4-52
ITEM 438 BITUMINOUS CONCRETE BERM MACHINE PLACED 4-54
ITEM 438.5 BITUMINOUS CONCRETE BERM REPAIR 4-54
ITEM 440 NEW CONCRETE SIDEWALK 4 INCH 4-59
ITEM 441 REPLACING BITUMINOUS CONCRETE SIDEWALK W/ CEMENT CONCRETE SIDEWALK 4 INCH 4-59
ITEM 442 CONCRETE SIDEWALK REPAIR 4-59
ITEM 442.1 CONCRETE SIDEWALK REPAIR < 25 L.F. 4-59
ITEM 443 REPLACING BITUMINOUS CONCRETE DRIVEWAY W/ CEMENT CONCRETE DRIVEWAY 6 INCH 4-59
ITEM 444 NEW CONCRETE DRIVEWAY 6 INCH 4-60
ITEM 445 STAMPED CEMENT CONCRETE ACCENT STRIP 4-60
ITEM 446 CONCRETE DRIVEWAY REPAIR 4-63
ITEM 446.1 CLASS B CONCRETE FOR ROADWAY BASE (3,500 P.S.I., 1-1/2", 520) 4-63
ITEM 446.2 CLASS A CONCRETE (4,000 P.S.I. 1-1/2", 565) 4-63
ITEM 446.3 EXCAVATABLE CONTROL DENSITY FILL (CDF) 4-64
ITEM 447 MODULAR UNIT (BRICK) PAVER SIDEWALK 4-65
ITEM 447.01 NEW BRICK SIDEWALKS AND DRIVEWAYS WITH GRAVEL BASE 4-70
ITEM 447.02 EXISTING BRICK SIDEWALKS AND DRIVEWAYS WITH GRAVEL BASE – REMOVE & RESET 4-70
ITEM 447.03 MODULAR UNIT REMOVE AND REPLACE 4-73
ITEM 448 WORCESTER HIGHWAY MONUMENT 4-73
ITEM 450 BOUNDS, REMOVE & RESET 4-73
ITEM 451 TEMPORARY PEDESTRIAN BRIDGE 4-73
ITEM 452 WHEELCHAIR RAMP BIT. CONCRETE - 2" THICK WITH DETECTABLE WARNING PANELS 4-76
ITEM 452.1 INSTALLATION OF DETECTABLE WARNING PANEL ON EXISTING BITUMINOUS CONCRETE RAMP COMPLETE IN PLACE 4-76
ITEM 453 REPLACING BITUMINOUS CONCRETE WHEELCHAIR RAMP W/ CEMENT CONCRETE WHEELCHAIR RAMP- 6” THICK WITH DETECTABLE WARNING PANELS 4-76
ITEM 454 WHEELCHAIR RAMP CEMENT CONCRETE - 6" THICK WITH DETECTABLE WARNING PANELS 4-76
ITEM 454.1 INSTALLATION OF DETECTABLE WARNING PANEL ON EXISTING CEMENT CONCRETE RAMP COMPLETE IN PLACE 4-76
ITEM 456 CONCRETE STEP (COMPLETE IN PLACE) 4-85
ITEM 457 WOOD STEP 4-87
ITEM 461 8' - 6" RETAINING WALL 4-87
ITEM 462 GRAVITY CONCRETE WALL 4-87

ITEM 464 STONE MASONRY WALL (COMPLETE IN PLACE) 4-91
ITEM 465 STONE MASONRY WALL, DRY 4-91
ITEM 466 HEADWALL CONCRETE, COMPLETE 4-93
ITEM 467 REMOVE AND REPLACE EXISTING GUARDRAIL 4-97
ITEM 468 GUARDRAIL STEEL TYPE SS 4-97
ITEM 468.1 WOODEN GUARDRAIL 4-97
ITEM 468.2 WOODEN GUARDRAIL – REMOVE AND REPLACE 4-97
ITEM 469 PRECAST CONCRETE BARRIER 4-101
ITEM 470 WOOD FENCE, REMOVE AND RESET 4-103
ITEM 472 WIRE FENCE, REMOVE AND RESET 4-103
ITEM 474 CHAIN LINK FENCE, 48 INCHES 4-103
ITEM 475 CHAIN LINK FENCE, 60 INCHES 4-103
ITEM 476 CHAIN LINK FENCE, 72 INCHES 4-103
ITEM 478 METAL PIPE RAIL 4-107
ITEM 480 SWEEPING 4-109
ITEM 481 ORNAMENTAL BOLLARD (COMPLETE IN PLACE) 4-109
ITEM 481.1 ORNAMENTAL BOLLARD (REMOVE AND RESET) 4-109
ITEM 481.2 ORNAMENTAL BOLLARD (REMOVE AND DISPOSE) 4-110

SECTION 500 - TRAFFIC 5-1

ITEM 501 4 INCH REFLECTORIZED WHITE LINE (THERMOPLASTIC) (LF) 5-1
ITEM 502 4 INCH REFLECTORIZED YELLOW LINE (THERMOPLASTIC) LF 5-1
ITEM 503 12 INCH REFLECTORIZED WHITE LINE (THERMOPLASTIC) LF 5-1
ITEM 504 PAVEMENT ARROW/LEGEND REFLECTORIZED WHITE (THERMOPLASTIC) EACH 5-1
ITEM 505 4 INCH REFLECTORIZED WHITE LINE (WATERBORNE) LF 5-1
ITEM 506 4 INCH REFLECTORIZED YELLOW LINE (WATERBORNE) LF 5-1
ITEM 507 12 INCH REFLECTORIZED WHITE LINE (WATERBORNE) LF 5-1
ITEM 508 PAVEMENT ARROW/LEGEND REFLECTORIZED WHITE (WATERBORNE) EACH 5-1
ITEM 509 BICYCLE LANE SYMBOL WITH ARROW OR SHARROW (DECAL) EACH 5-2
ITEM 510 VIDEO DETECTION SYSTEM 5-2
ITEM 511 WIRE LOOP INSTALLED IN ROADWAY SD4.041 5-5
ITEM 512 PULL BOX 8"X23" (SD2.030) 5-9
ITEM 513 PULL BOX 12"X24" (SD2.031) 5-9
ITEM 519 MOBILE LIGHTED VARIABLE MESSAGE BOARD 5-9
ITEM 520 WARNING AND REGULATORY SIGNS 5-9
ITEM 521 TYPE "A" STREET NAME SIGNS 5-9
ITEM 522 TYPE "B" STREET NAME SIGNS 5-10
ITEM 523 TRAFFIC SIGN POLES 5-12
ITEM 524 PARKING METER POSTS 5-14
ITEM 526 PARKING METERS 5-16
ITEM 530 POLE PAINTING 5-17

SECTION 600 - TRAFFIC SIGNAL EQUIPMENT 6-1

ITEM 601 CONTROLLER (EACH) 6-5
ITEM 601.10 CONTROLLER CABINET HARNESS (EACH) 6-5
ITEM 602 CONTROLLER CABINET ASSEMBLY, SIZE “P”-PER SPECIFICATIONS COMPLETE IN PLACE 6-6
ITEM 602.05 CONTROLLER CABINET SHELL ONLY, SIZE “P” EACH 6-6
ITEM 602.10 CONTROLLER CABINET ASSEMBLY, SIZE “M”-PER SPECIFICATIONS COMPLETE IN PLACE 6-6
ITEM 602.15 CONTROLLER CABINET SHELL ONLY, SIZE “M” (EACH) 6-6
ITEM 602.20 SSS-87 STANDARD LOAD SWITCH W/I & O FUNCTIONS (200 TYP) (EACH) 6-6
ITEM 602.30 SSF-87 FLASHER LOAD SWITCH (204 TYP) (EACH) 6-6
ITEM 602.40 30A RELAY SWITCHES (EACH) 6-6
ITEM 602.50 MMU-16 SERIES MANAGEMENT MALFUNCTION UNIT (EACH) 6-6
ITEM 602.51 CHANNEL CONFLICT MONITOR FOR CLOSED LOOP SYSTEM (EACH) 6-6
ITEM 602.52 6 CHANNEL CONFLICT MONITOR FOR CLOSED LOOP SYSTEM (EACH) 6-6
ITEM 602.60 BIU 700 (EACH) 6-6
ITEM 602.70 24V -5A SHELF MOUNT POWER SUPPLY FOR TS-2 CABINET (EACH) 6-6

ITEM 602.81 OPTICOM DUAL (2) CHANNEL PHASE SELECTORS (700 SERIES) (EACH) 6-6
ITEM 602.82 OPTICOM FOUR (4) CHANNEL PHASE SELECTORS (700 SERIES) (EACH) 6-6
ITEM 602.83 WHITE CONFORMATION STROBE INDICATOR FOR PRE-EMPTION (EACH) 6-6
ITEM 602.84 OPTICOM DETECTOR (700 SERIES) – ONE-WAY DIRECTION (EACH) 6-6
ITEM 602.85 OPTICOM DETECTOR (700 SERIES) – TWO-WAY DIRECTION (EACH) 6-6
ITEM 602.90 COOLING FANS FOR CONTROLLER CABINET (EACH) 6-6
ITEM 602.91 THERMOSTATS FOR COOLING FANS IN CONTROLLER CABINET (EACH) 6-6
ITEM 603 CONCRETE FOUNDATIONS (FOR CONTROLLER CABINET) (EACH) 6-8
ITEM 604 VIDEO DETECTION CAMERAS WITH MOUNTING HARDWARE COMPLETE IN PLACE 6-8
ITEM 604.10 VIDEO DETECTION RACK PLUG-IN AMPLIFIERS-SINGLE CHANNEL (EACH) 6-8
ITEM 604.20 VIDEO DETECTION RACK PLUG-IN AMPLIFIERS – DUAL CHANNEL (EACH) 6-8
ITEM 604.30 VIDEO DETECTION RACK PLUG-IN AMPLIFIERS – THREE CHANNEL (EACH) 6-8
ITEM 604.40 VIDEO DETECTION RACK PLUG-IN AMPLIFIERS – FOUR CHANNEL (EACH) 6-8
ITEM 604.50 VIDEO CAMERA WIRING HARNESS WHIPS (EACH) 6-8
ITEM 604.60 ASTRO-BRAC – VIDEO MOUNTING HARDWARE (EACH) 6-8
ITEM 604.61 ASTRO-BRAC – VIDEO MOUNTING HARDWARE W/WIRING BOX (EACH) 6-8
ITEM 605 VIDEO COMPRESSION SYSTEM (COMPLETE IN PLACE) 6-10
ITEM 606 RACK MOUNTED VIDEO DETECTION SINGLE POINT INTERFACE ETHERNET DEVICE WITH MPEG4/H.264 (COMPLETE IN PLACE) 6-11
ITEM 607 COAXIAL CABLE AND CONNECTIONS (LINEAR FOOT) 6-13
ITEM 608 12”-3 SECTION LED TRAFFIC SIGNAL HEADS W/VISORS COMPLETE (EACH) 6-13
ITEM 608.10 12” BI-MODEL FIBER-OPTIC LEFT TURN ARROW W/HOUSINGS (EACH) 6-13
ITEM 608.20 12” TUNNEL VISORS FOR TRAFFIC SIGNALS (EACH) 6-13
ITEM 608.30 12” GEOMETRICALLY PROGRAMMED LOUVER SLOTTED UNIVERSAL FULLCIRCLE & VISORS (EACH) 6-13
ITEM 609 16” COUNTDOWN LED PEDESTRIAN SIGNAL HEADS W/VISORS (EACH) 6-13
ITEM 609.10 16” COUNTDOWN LED PEDESTRIAN MODULES (EACH) 6-13
ITEM 609.20 16” PEDESTRIAN HOUSING WITH VISORS ONLY (EACH) 6-14
ITEM 609.30 16”OPEN PEDESTRIAN VISORS (EACH) 6-14
ITEM 610 AUDIBLE PEDESTRIAN DEVICES (EACH) 6-14
ITEM 611 ADA PEDESTRIAN PUSHBUTTONS – NON LATCHING (EACH) 6-14
ITEM 611.10 ADA PUSHBUTTON SWITCH ASSEMBLY (BOX OF 10) (EACH) 6-14
ITEM 612 TRAFFIC SIGNAL POLES-9 FT. STANDARD (EACH) 6-14
ITEM 612.10 ALUMINUM POLE PLATES FOR SIDE OF POLE MOUNTING (EACH) 6-14
ITEM 612.20 UPPER & LOWER PIPE ASSEMBLY FOR SINGLE SECTION- COMPLETE (EACH) 6-14
ITEM 612.25 UPPER & LOWER PIPE ASSEMBLY FOR TWOWAY SECTION COMPLETE (EACH) 6-14
ITEM 612.30 UPPER & LOWER PIPE ASSEMBLY FOR MULTI - SECTION COMPLETE (EACH) 6-14
ITEM 612.40 THREADED 3-WAY CENTER SUPPORT W/SET SCREWS (EACH) 6-15
ITEM 612.50 IRON “T” W/SET SCREWS – THREADED ALL ENDS (EACH) 6-15
ITEM 612.51 IRON ELBOW W/SET SCREWS – THREADED BOTH ENDS (EACH) 6-15
ITEM 612.52 SUPPORT TUBE 1 ½” X 43” THREADED BOTH ENDS (EACH) 6-15
ITEM 612.60 STEEL WASHERS FOR TRAFFIC SIGNALS (EACH) 6-15
ITEM 612.70 SLIP FITTER ASSEMBLY FOR 3 & 4 WAY SIGNAL HEADS THREADED (EACH) 6-15
ITEM 612.71 CAST NIPPLE LOCKING NUT (EACH) 6-15
ITEM 612.72 NEOPRENE WASHERS FOR TRAFFIC SIGNALS (EACH) 6-15
ITEM 612.73 SERRATED LOCKING RINGS FOR TRAFFIC SIGNALS (EACH) 6-15
ITEM 612.74 THREADED OCTAGON SIGNAL CLOSURE CLOSING CAP - 2” LENGTH (EACH) 6-15
ITEM 613 ALUMINUM OCTAGON TRAFFIC SIGNAL BASES W/STEEL COUPLING (EACH) 6-15
ITEM 614.15 15 FT. MAST ARM ASSEMBLY-TYPE II, MAX (HEAVY) LOADINGS (EACH) 6-15
ITEM 614.20 20 FT. MAST ARM ASSEMBLY-TYPE II, MAX (HEAVY) LOADINGS (EACH) 6-15
ITEM 614.25 25 FT. MAST ARM ASSEMBLY-TYPE II, MAX (HEAVY) LOADINGS (EACH) 6-15
ITEM 614.30 30 FT. MAST ARM ASSEMBLY-TYPE II, MAX (HEAVY) LOADINGS (EACH) 6-15
ITEM 614.35 35 FT. MAST ARM ASSEMBLY-TYPE II, MAX (HEAVY) LOADINGS (EACH) 6-15
ITEM 614.40 40 FT. MAST ARM ASSEMBLY-TYPE II, MAX (HEAVY) LOADINGS (EACH) 6-15
ITEM 614.45 45 FT. MAST ARM ASSEMBLY-TYPE II, MAX (HEAVY) LOADINGS (EACH) 6-15
ITEM 614.50 MAST ARM BASES – 20” BOLT PATTERN ON BOTTOM (EACH) 6-15
ITEM 614.60 MAST ARM ORNAMENTAL BASES-VALMONT TYPE (EACH) 6-15
ITEM 614.70 MAST ARM ORNAMENTAL BASES-UNION METAL TYPE (EACH) 6-15
ITEM 614.81 ASTRO-BRAC ASSEMBLY-ONE WAY – 3 SECTION (EACH) 6-15

ITEM 614.82 ASTRO-BRAC ASSEMBLY-ONE WAY – 4 SECTION (EACH) 6-15
ITEM 614.83 ASTRO-BRAC ASSEMBLY-ONE WAY – 4 SECTION (EACH) 6-15
ITEM 614.84 OPTICOM BAND MOUNTING HARDWARE KITS FOR MAST ARMS (EACH) 6-16
ITEM 614.91 CAST IRON RIGID MAST ARM HANGER BODY ASSEMBLY (EACH) 6-16
ITEM 614.92 CAST IRON PLUMBIZER ASSEMBLY (EACH) 6-16
ITEM 614.93 CAST IRON FREE SWING MAST ARM HANGER ASSEMBLY- COMPLETE (EACH) 6-16
ITEM 615 MAST ARM FOUNDATION – COMPLETE (EACH) 6-17
ITEM 616 12” RED LED BALL INDICATION (EACH) 6-17
ITEM 616.10 12” RED LED ARROW INDICATION (EACH) 6-17
ITEM 616.20 12” RED LED FOR 3M PROGRAMMABLE SIGNALS (EACH) 6-17
ITEM 616.30 12” GREEN LED BALL INDICATION (EACH) 6-17
ITEM 616.40 12” GREEN LED ARROW INDICATION (EACH) 6-17
ITEM 616.50 12” GREEN LED FOR 3M PROGRAMMABLE SIGNALS (EACH) 6-17
ITEM 616.60 12” AMBER LED BALL INDICATION (EACH) 6-17
ITEM 616.70 12” AMBER LED ARROW INDICATION (EACH) 6-17
ITEM 616.80 12” AMBER LED FOR 3M PROGRAMMABLE SIGNALS (EACH) 6-17
ITEM 617 CLOSED LOOP MASTER COMPUTER SYSTEM COMPLETE IN PLACE (EACH) 6-19
ITEM 618 FIBER OPTIC INTERCONNECTION/ COMMUNICATION CABLE (LINEAR FOOT) 6-24

SECTION 700 - * 7-1**

SECTION 800 - STREET LIGHTING 8-1

ITEM 804.2 2 INCH ELECTRICAL CONDUIT (FOOT) TYPE NM – PLASTIC – (NEMA) FOR STREET LIGHTING 8-1
ITEM 804.21 ADDITIONAL 2 INCH ELECTRICAL CONDUIT (FOOT) TYPE NM – PLASTIC – (NEMA) FOR STREET LIGHTING WITHIN THE SAME TRENCH 8-1
ITEM 804.3 3-INCH ELECTRICAL CONDUIT (FOOT) TYPE NM PLASTIC (UL)ITEM 804.31 ADDITIONAL 3-INCH ELECTRICAL CONDUIT (FOOT) TYPE NM PLASTIC (UL) IN THE SAME TRENCH 8-2
ITEM 804.4 4-INCH ELECTRICAL CONDUIT (FOOT) TYPE NM PLASTIC (UL) 8-2
ITEM 804.41 ADDITIONAL 4-INCH ELECTRICAL CONDUIT (FOOT) TYPE NM PLASTIC (UL) IN THE SAME TRENCHGENERAL 8-2
ITEM 806.2 2 INCH ELECTRICAL CONDUIT (FOOT) 8-3
ITEM 806.21 ADDITIONAL 2 INCH ELECTRICAL CONDUIT (FOOT) IN THE SAME TRENCH 8-3
ITEM 810.2 ELECTRIC HANDHOLE PRECAST CONCRETE (EACH) 8-4
ITEM 810.3 PULL BOX 12”X24” (SD 2.031) FOR SIGNAL CABLE (EACH) 8-4
ITEM 810.4 PULL BOX 12”X12” (SD 2.030) FOR INTERCONNECTION CABLE (EACH) 8-4
ITEM 811.2 ELECTRIC LOAD CENTER BASE CONCRETE (EACH) 8-5
ITEM 812.2 LIGHT STANDARD FOUNDATION CONCRETE (EACH) 8-5
ITEM 813.31 CONDUCTOR #2 AWG (FOOT) 8-6
ITEM 813.32 CONDUCTOR #6 AWG (FOOT) 8-6
ITEM 813.33 CONDUCTOR #8 AWG (FOOT) 8-6
ITEM 813.80 ELECTRICAL SERVICE (LINEAR FOOT) 8-7
ITEM 820 DECORATIVE STREET LIGHTING 8-8
ITEM 821 STREET LIGHT 8-13
ITEM 821.20 STREET LIGHTING CONTROL LOAD CENTER (EACH) 8-27
ITEM 822 SPOT DIGS (EACH) 8-27

SECTION 900 - LUMP SUM RESERVE 9-1

ITEM 900 LUMP SUM RESERVE FOR CITY USE 9-1

SECTION 000 - SPECIFICATIONS

SCOPE OF WORK

All work, under contract, shall be performed in accordance with Division II and III of the latest edition of the Massachusetts Standard Specifications for Highways and Bridges as amended, except as otherwise required in these specifications.

Unless otherwise specified, the work to be completed under contract, consists of the furnishing of all equipment, labor and materials and performing all work in strict compliance with these specifications for the construction of SUPERPAVE bituminous concrete pavement, drainage pipe, removal of designated trees, adjusting frames and covers and all else specified herein, together with all appurtenances. The work is located in the City of Worcester, Massachusetts, in the street noted in the proposal. All work shall conform to the standards and specifications on file with the City of Worcester, Department of Public Works and Parks – Engineering Division, and any changes, drawings, plans and written directions that may, from time to time, be issued by the Contracting Officer.

MAINTENANCE OF TRAFFIC

Streets under construction shall be open to through traffic and provisions shall be made for access to all abutting land throughout the period of construction. Beginning at twilight and continuing through the night to dawn, the Contractor shall place and maintain over or near all obstructions within the construction limits, sufficient lights and guard to protect the general public from injury.

MEASUREMENT AND PAYMENT

Unless specified otherwise herein, measurements and payment for all items of work shall be in accordance with the applicable provisions of the Massachusetts Standard Specifications for Highways and Bridges latest amendment (MSSHB).

SECTION 100 - EARTHWORK

The work to be done under Items 100 through 110 shall conform to the applicable provisions of Section 101, (MSSHB). Trees under 9 inches and stumps under 9 inches in diameter that are required to be removed are considered as a subsidiary obligation of the Contractor and are to be removed at the Contractor's expense.

ITEM 100 CLEARING & GRUBBING

ITEM 104 TREE REMOVAL (LESS THAN 24 INCHES) INCLUDING STUMP

ITEM 106 TREE REMOVAL (24 INCHES & OVER) INCLUDING STUMP

ITEM 107 STREET TREE REPLACEMENT

ITEM 108 STUMP REMOVED (LESS THAN 24 INCHES)

ITEM 109 STUMP REMOVED (GREATER THAN 24 INCHES)

ITEM 110 PINE BARK MULCH

A. ***GENERAL***

The Contractor shall provide all balled and burlapped trees, all necessary hardware, materials, labor, tools, and equipment required to properly complete the work.

B. ***METHOD OF PLANTING***

All trees required shall be transported, moved and installed with the fibrous root system as a solid mass of earth.

The diameter and depth of the earth mass must be sufficient to encompass the fibrous and feeding root systems necessary for the healthy development of the new trees, but not larger than the tree planting pit. All tree pits are to have the following minimum dimensions; 6 feet in length by 3 feet in width. All tree pit dimensions shall be approved by the contracting officer.

The Contractor shall provide at least one (1) person who shall be present at all times during the execution of the work and who shall be thoroughly familiar and knowledgeable with the type of trees being handled in reference to the best methods for their proper delivery, handling and installation.

C. ***PLANT MATERIALS***

All trees shall be nursery grown and shall have a caliper of 2 - 2-1/2 inches.

Tree type shall be London Plane Tree, Ginkgo Biloba (male only), Redmond Linden, Washington American Elm, approximately 18 feet in height.

The root shall be approximately 18 inches in diameter so that it may properly be located in the sidewalk minimizing pedestrian interference.

D. ***FERTILIZER: 16-8-16 (3) YEAR RELEASE***

Tree fertilizer packets shall be installed in the tree planting pit during tree planting installations. A minimum of two (2) fertilizer packets per tree, or as recommended by the manufacturer.

E. ***GUARANTEE PERIOD***

At the end of the establishment period of 120 days, formal written acceptance from the City Supervisor of Forestry/Parks Department stating that tree plantings and their care and maintenance has been completed by the Contractor in all respects and in accordance with the tree specifications shall be required.

After the establishment period, the Contractor shall guarantee that all trees shall be in good healthy and flourishing condition two (2) years from date of acceptance.

The Contractor shall note that the guarantee period of two (2) years begins at the end of the establishment period after acceptance from the City Supervisor of Forestry/Parks Department.

F. ***SPECIAL CONDITIONS***

The Contractor shall install a root control system to create an in-soil barrier that can block roots without harming plants. The root control system shall be Typar biobarrier or equal that combines a fabric with time-release herbicide. The specified fabric width is 19.5 inches installed as shown on the figure below.

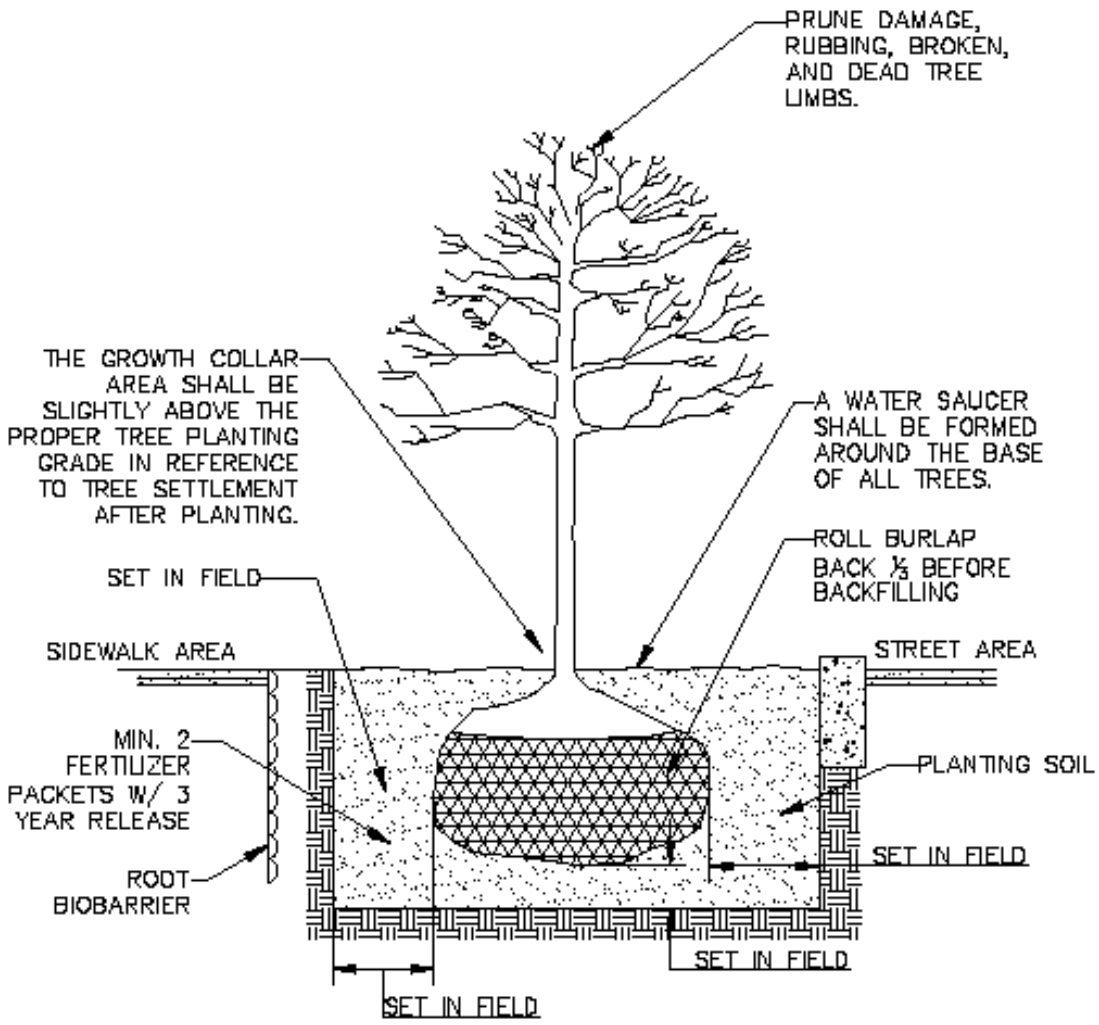

NOTES:
1. CONTRACTOR TO LOCATE ALL UNDERGROUND UTILITIES, SPRINKLER SYSTEMS, CITY WATER GATES, AND ETC. BEFORE DIGGING TREE PLANTING PITS.
2. NO TREE STAKES AND NO WRAP IS REQUIRED.
3. ROOT BALL SHALL BE SET ON COMPACTED SOIL AREA TO REDUCE SETTLEMENT OF THE TREE.

TREE PLANTING DETAIL

SEPTEMBER 25, 2009		DEPARTMENT OF PUBLIC WORKS AND PARKS Engineering Division 20 East Worcester St, Worcester MA 01604				
TREE PLANTING DETAIL						
NOT TO SCALE						
SHEET 1 OF 1			NO.	DATE	DESCRIPTION	BY

All newly planted trees shall be watered in by the Contractor within twenty-four (24) hours after planting.

During the establishment period of 120 days, the Contractor shall be required to water trees adequately. An adequate supply of water is estimated to be the equivalent of one (1) inch of water per week, delivered at weekly intervals in the form of natural rain or augmented as required by the Contractor.

Guying all trees shall be completed immediately after planting. Drive ground anchors into the ground by manual or machine method at approximately 45-degree angle to the ground plane and at 120-degree intervals around the tree. Pre-load anchors after driving until anchor turns in ground at 90 degree angle to the line of driving force. Anchor assembly will rise 2 to 6 inches during pre-loading. Attach guying cables, turnbuckles and hoses. Tighten until tree is rigidly guyed. On all guys, 1/3 distance up from ground to trunk, secure white flagging, 1"x18" tied securely.

Stump material shall be removed to a minimum depth of 12 inches below sidewalk grade, for ITEMS 108 and 109. Any root material within the sidewalk shall be considered part of the stump.

G. ***MEASUREMENT AND PAYMENT***

The work under Item 100 shall be paid by the acre. The work under items 104 – 109 shall be paid by each. The work under Item 107 Street Tree Replacement will be paid per each installed, complete in place. The work under item 110 shall be paid by the cubic yard.

ITEM 111 HEDGE, REMOVE AND RESET

A. ***GENERAL***

Where encountered within the limits of work, hedges shall be removed and reset as directed by the Contracting Officer.

This work shall consist of removing hedges, excavations of pits, placing of backfill mixture, mulching, watering, staking or guying, fertilizing and care of the hedges for a period of one year.

Whenever hedges cannot be planted on the day of removal, all those with bare roots shall be kept in moist soil in a satisfactory manner by the Contractor until they are planted. Throughout the work care shall be exercised to keep the roots of the hedges from drying out and prevent the hedges from being broken, scarred or damaged in any way. All emergency storage of materials shall be the entire risk of the Contractor.

B. ***MEASUREMENT AND PAYMENT***

Hedges shall be measured as removed and reset in place and shall be paid at the price per linear foot bid in the proposal.

ITEM 111.1 BUSHES, REMOVE AND RESET

A. ***GENERAL***

Where encountered within limits of work, bushes shall be removed and reset as directed by the Contracting Officer.

This work shall consist of removing bushes, excavations of pits, placing of backfill mixture, mulching, watering, staking or guying, fertilizing and care of the bushes for a period of one year.

Whenever bushes cannot be planted on the day of removal, those with bare roots shall be kept in moist soil in a satisfactory manner by the Contractor until they are planted. Throughout the work care shall be exercised to keep the roots of the bushes from drying out and prevent the bushes from being broken, scarred or damaged in any way. All emergency storage of materials shall be the entire risk of the Contractor.

B. ***MEASUREMENT AND PAYMENT***

Bushes shall be measured as removed and reset in place and shall be paid at the price per each bid in the proposal.

ITEM 112 UNCLASSIFIED EXCAVATION & BACKFILL

A. ***GENERAL***

The excavation done under this item shall conform to the applicable provisions of Section 140, (MSSHB). No allowance in addition to the prices paid for this item will be made for sheeting, shoring, pumps, pumping or

bailing, equipment or labor necessary on account of water or unsuitable materials. Excavation regardless of depth shall be paid at the unit price of this item.

Backfilling and compacting of excavated areas shall be performed by the contractor at no additional cost to the City and shall be in compliance with Items #220 through #223 – Backfilling In Open Trench. Excavated material not classified as unsuitable may be used for backfilling. Where excavated material is found to be unsuitable, the Contractor shall supply gravel borrow for backfill conforming to the specifications of Item 126. Compensation for gravel will be as specified in Item 126.

Backfill materials shall be considered unsuitable when containing at least one of the following properties:

1. Material with a maximum unit dry weight per cubic foot less than 90 lbs., as determined by ASTM D 1557.
2. Material containing visible organic matter, topsoil, organic silt, peat, construction debris, roots and stumps.
3. Material which has a liquid limit greater than 55.
4. Material designated in the field by the Contracting Officer.

All excavated material, except as directed by the Contracting Officer, shall be removed from the site and disposed of at no additional cost to the City.

B. ***MEASUREMENT AND PAYMENT***

The basis of payment for this item will be per cubic yard measured in place. Limits of excavation are as specified or as directed by the Contracting Officer.

ITEM 112.1 UNCLASSIFIED EXCAVATION & BACKFILL (HOURLY RATE)

A. ***GENERAL***

See Item 112 for General Information.

Work under this item shall include, but not limited to, excavation within the right-of-way to determine the depth from finished grade to underground utilities, such as water mains and individual water services. Note that elevation control must be established so that accurate depth measurements can be taken.

B. ***MEASUREMENT AND PAYMENT***

Measurement and payment shall be by the hour. The hourly rate shall include all charges for the labor and equipment required to excavate, measure the depth, and backfill the hole or trench.

ITEM 116 EXCAVATION

A. ***GENERAL***

The work to be done under this item shall conform to the applicable provisions of Section 120, (MSSHB).

The bituminous concrete pavement where it exists is to be removed and disposed of satisfactorily with due caution being taken by the Contractor not to disturb any of the castings that are now on the streets in question.

For the sum bid under this item the Contractor shall also excavate and salvage any inlet stone or capstones encountered in the working area. The inlet or capstone curb shall be stacked at the Department of Public Works and Parks – 1065 Millbury Street unless otherwise directed by the Contracting Officer.

B. ***TRIMMING THE PAVEMENT***

Trimming pavement at intersecting streets, at driveways, and where required shall be included in the item Excavation. No additional payment will be made for this work. Trimming shall be a neat, straight line to the depth of the existing pavement, or as directed by the Contracting Officer.

C. ***MEASUREMENT AND PAYMENT***

This item will be paid by the cubic yard.

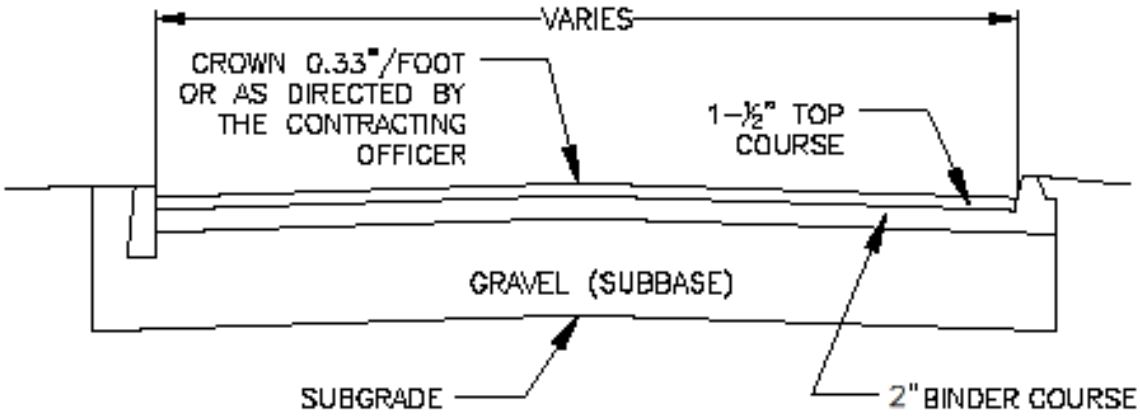

ITEM 116 EXCAVATION – (SECTION 120)
WHEN EXCAVATING TO A SPECIFIC PAY LINE (SUBGRADE) THE CONTRACTOR SHALL PROSECUTE THE WORK SO AS TO PREVENT THE PONDING OF WATER. EACH LIFT OF EXCAVATION SHALL BE VISIBLY CROWNED TO ALLOW DRAINAGE OF SURFACE AND RAIN WATER.

ITEM 402 FINE GRADING, ROLLING AND FINISHING – (SECTION 170 PARAGRAPH 170.61)
WHEN EXCAVATING TO A PAY LINE THAT REQUIRES 6 INCHES OR MORE NEW GRAVEL BASE THE CONTRACTOR SHALL ADHERE TO PARAGRAPH 170.61 IN MA STATE STANDARD SPECIFICATION OF 1988. IN SUCH CASES WHERE THE PAY LINE REQUIRES LESS THAN 6 INCHES OF NEW GRAVEL THE CONTRACTOR WILL FINE GRADE, ROLL AND FINISH AT THE SUBBASE LINE AND BE PAID ITEM 402 FINE GRADE, ROLL AND FINISH.

ITEM 126 GRAVEL BORROW – (SECTION 405)
THE CONTRACTOR WHEN PLACING GRAVEL SUBBASE SHALL SPREAD AND COMPACT IN ACCORDANCE TO PARAGRAPHS 405.20 & 405.60 IN MA STATE STANDARD SPECIFICATIONS OF 1988.

EXCAVATION & GRADING POLICY
TYPICAL SECTION

ITEM 118 CLASS "A" ROCK EXCAVATION AND DISPOSAL

A. ***GENERAL***

The work to be done under this item shall conform to the applicable provisions of Section 120, (MSSHB) with the exception that method of payment will be made only for excavation to line and grades as indicated on the plans or as directed by the Contracting Officer.

B. ***MEASUREMENT AND PAYMENT***

Measurement shall be in cubic yards.

ITEM 120 CLASS "B" ROCK EXCAVATION AND DISPOSAL

A. ***GENERAL***

The work to be done under this item shall conform to the applicable provisions of Section 140, (MSSHB). No allowance in addition to the price paid for the item will be made for pumps, pumping or bailing, equipment or labor necessary on account of water. All excavated and unsuitable material, except as directed by the Contracting Officer, shall be removed from the site.

B. ***MEASUREMENT AND PAYMENT***

Measurement shall be in cubic yards.

ITEM 121 TRENCH ROCK EXCAVATION AND DISPOSAL

A. ***GENERAL***

The work to be done under this item shall conform to the applicable provisions of Section 140, (MSSHB), it shall include the removal and disposal of both Class "A" and Class "B" rock encountered during trench excavation. The payment of excavated material under this item is paid in addition to trench excavation covered in Items 220 thru 223 and Items 301 through 303. Payment lines shall be as shown on the detail entitled “Typical Trench Section in Rock” included in this book.

B. ***MEASUREMENT AND PAYMENT***

Measurement shall be in cubic yards.

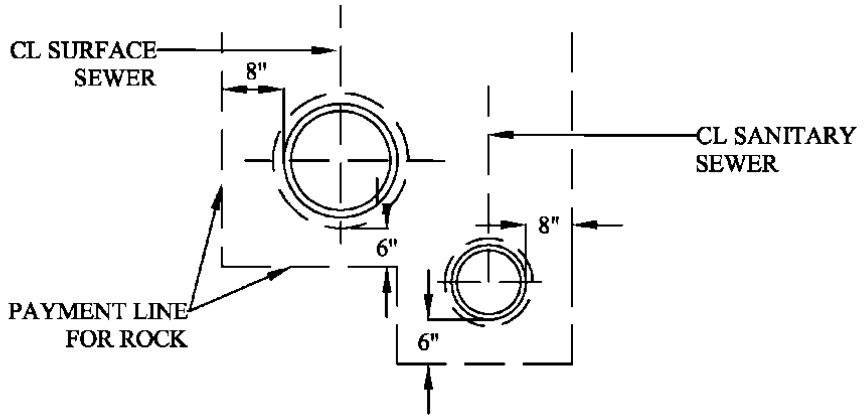

TYPICAL TRENCH SECTION IN ROCK

LIMITS OF NORMAL EXCAVATION

THE LIMITS OF NORMAL WIDTH AND DEPTH OF EXCAVATION SHALL BE AS DESCRIBED BELOW UNLESS OTHER LIMITS ARE INDICATED ON THE DRAWINGS AS SPECIFIED.

FOR PIPES IN TRENCH, THE NORMAL WIDTH OF THE TRENCH SHALL BE MEASURED BETWEEN VERTICAL PLANES WHICH ARE A DISTANCE APART EQUAL TO THE SUM OF 18" PLUS 1 $\frac{1}{3}$ TIMES THE NOMINAL INSIDE DIAMETER OF THE PIPE. IF THE WIDTH SO COMPUTED IS LESS THAN 3 FEET, A WIDTH OF 3 FEET SHALL BE TAKEN AS THE NORMAL WIDTH OF PAYMENT. THE NORMAL DEPTH SHALL BE MEASURED TO A DISTANCE OF 0.5 FEET BELOW THE BOTTOM OF THE OUTSIDE OF THE PIPE IN EARTH AND IN ROCK UNLESS THERE BE A CRADLE UNDERNEATH THE PIPE, IN WHICH CASE THE NORMAL DEPTH SHALL BE MEASURED TO THE UNDERSIDE OF THE CRADLE. THE WIDTH OF THE TRENCH FOR THE CRADLE SHALL BE ASSUMED TO BE THAT ABOVE SPECIFIED FOR PIPES IN TRENCH.

NO ALLOWANCE WILL BE MADE FOR ADDITIONAL WIDTH OR DEPTH OF TRENCH FOR BELL HOLES OR AT THE MANHOLES.

FOR OTHER STRUCTURES, THE NORMAL WIDTH SHALL BE MEASURED BETWEEN VERTICAL PLANES 1 FOOT OUTSIDE THE NEAT LINES OF THE SEVERAL PARTS OF THE STRUCTURE, EXCEPT THAT THE WIDTH AT ANY ELEVATION SHALL BE MEASURED AS NOT LESS THAN THE WIDTH AT A LOWER ELEVATION. THE NORMAL DEPTH SHALL BE MEASURED TO THE UNDERSIDE OF THAT PART OF THE STRUCTURE FOR WHICH THE EXCAVATION IS MADE.

SEPTEMBER 18, 2008		DEPARTMENT OF PUBLIC WORKS AND PARKS Engineering Division 20 East Worcester St, Worcester MA 01604				
TYPICAL TRENCH SECTION IN ROCK						
NOT TO SCALE						
SHEET 1 OF 1			NO.	DATE	DESCRIPTION	BY

ITEM 122 EARTH EXCAVATION BELOW NORMAL GRADE

A. *GENERAL*

The work to be done under this item shall consist of the excavation and disposal of unsuitable materials below the normal grade of trenches or structures, where directed by the Contracting Officer. The depths and widths of excavation under this item shall be as directed by the Contracting Officer.

Wherever material below normal grade is unsuitable for foundation and has been removed under Item 122 the Contractor shall furnish and place material subject to the approval of the Contracting Officer.

B. *CUTTING PAVEMENT*

When excavations are to be made in paved surfaces the pavement shall be cut ahead of the excavation by means of pneumatic or other suitable tools to provide a clean uniform edge with minimum disturbance of remaining pavements. The width of pavement removed shall not exceed the distance as measured between vertical planes two (2) feet outside the outside limits of the pipe or masonry.

C. *SHEETING AND BRACING*

The Contractor shall furnish, put in place, and maintain such sheeting and bracing, etc., as may be required to support the sides of the excavation and to prevent any movement of earth which could in any way diminish the width of the excavation below what is necessary for proper construction, or otherwise injure or delay the work or endanger adjacent structures.

Whenever possible, sheeting shall be driven ahead of the excavation to avoid loss of material from behind the sheeting. If necessary to excavate below the sheeting, care shall be taken to avoid trimming behind the face along which the sheeting will be driven, but if voids are formed they shall be immediately filled with sand and compacted.

The Contractor shall leave in place to be embedded in the backfill or concrete all sheeting, bracing, etc. which is shown on the drawings to be left in place, and shall also leave in place any and all sheeting, bracing, etc. not shown on the drawings, which the Contracting Officer may direct him in writing to leave in place at any time during the progress of the work, for the purpose of preventing injury to structures or property.

Sheeting to be left in place shall be cut at an elevation as specified or as directed by the Contracting Officer.

All sheeting and bracing not to be left in place shall be carefully removed in such a manner as not to endanger the construction or other structures. All voids left or caused by withdrawal or sheeting shall be immediately backfilled with approved material and compacted by ramming with tools especially adapted to that purpose, by watering, or otherwise as may be directed.

As specified under Sheeting in Place, the Contractor shall be paid only for sheeting left in place.

D. *MEASUREMENT AND PAYMENT*

Earth excavation below normal grade ordered by the Contracting Officer shall be measured and paid for under Item 122 by the cubic yard to the depths and widths for the extent ordered. Disposal of unsuitable material shall be the responsibility of the contractor at no additional cost to the City.

ITEM 123 STRUCTURES ABANDONED OR REMOVED

A. *GENERAL*

The work to be done under this item shall conform to the applicable provisions of Section 140, (MSSHB).

B. *MEASUREMENT AND PAYMENT*

The unit bid price per each shall be full compensation for all work required including salvage and delivery to the City's Department of Public Works and Parks – 1065 Millbury Street of any castings as directed by the Contracting Officer.

ITEM 124 ORDINARY BORROW/SELECTED COMMON FILL

A. *GENERAL*

The work to be done under this item shall consist of furnishing and placing ordinary borrow in trenches or other areas specified by the Contracting Officer.

B. *MATERIAL*

Ordinary Borrow/Selected Common Fill shall consist of a mineral soil substantially free from cinders, ashes, organic materials, loam, wood, trash and other objectionable materials that may be compressible or that cannot be properly compacted. It shall have no stone larger than six (6) inches in greatest dimension. The fill shall not contain granite blocks, broken concrete, masonry rubble or other similar materials. It shall have physical properties such that it can be readily compacted during backfilling. The material shall have a maximum unit dry weight per cubic foot greater than 90 lbs., as determined by ASTM D698 and have a liquid limit less than 55. Snow, ice and frozen soil shall not be permitted.

C. ***MEASUREMENT AND PAYMENT***

The number of cubic yards of ordinary borrow to be paid under Item 124 shall be the quantity measured in place, or as ordered by the Contracting Officer.

ITEM 125 SAND BORROW

A. ***GENERAL***

Sand Borrow shall consist of clean, inert, hard, durable grains of quartz or other hard, durable rock, free from loam or clay, surface coatings and deleterious materials. The allowable amount of material passing a No. 200 sieve as determined by AASHTO-T11 shall not exceed 10% by weight.

The maximum particle size for sand borrow shall be as follows:

M104.0 Type b, 3/8 in.

B. ***MEASUREMENT AND PAYMENT***

The number of cubic yards of sand borrow to be paid under Item 125 shall be the quantity measured in place, or as ordered by the Contracting Officer.

ITEM 126 GRAVEL BORROW

A. ***GENERAL***

Gravel Borrow shall consist of inert material that is hard, durable stone and coarse sand, free from loam and clay, surface coatings and deleterious materials.

Gradation requirements for gravel shall be determined by AASHO-T11 and T27 and shall conform to the following:

SIEVE	PERCENT PASSING
½ in.	50 - 85
No. 4	40 - 75
No. 50	8 - 28
No. 200	0 - 8
Maximum size of stone in gravel shall be as follows:	
M1.03.0 Type a	6 inches largest dimension
M1.03.0 Type b	3 inches largest dimension
M1.03.0 Type c	2 inches largest dimension

Gravel Borrow shall conform to MHD Standards, Section M1.03.0, and Type b with no stones greater than three (3) inches in diameter.

B. ***MEASUREMENT AND PAYMENT***

The number of cubic yards to be paid under Item 126 shall be the quantity measured in place, or as ordered by the Contracting Officer.

ITEM 128 SCREENED LOAM BORROW

A. ***GENERAL***

The work to be done under this item shall conform to the applicable provisions of Section M1.05.0 and 751.61, (MSSHB). The screened loam shall not contain stones greater than one-half inch in diameter. At least 10 days prior to anticipated start of topsoiling operations, a 25 lb. sample of topsoil material shall be delivered to the

Contracting Officer for testing and approval. Based on tests performed by the Contracting Officer, the top soil shall be identified as acceptable with certain fertilizer and limestone applications or unacceptable. If the topsoil is found acceptable, the fertilizer and lime requirements will be as specified or as recommended by the Contracting Officer. If the top soil is found unacceptable, the Contractor shall be responsible for identifying another source of topsoil and shall incur all expenses associated with testing additional samples. All topsoil incorporated into the site work shall match the sample provided to the Contracting Officer for testing.

B. ***MEASUREMENT AND PAYMENT***

The number of cubic yards to be paid under Item 128 shall be the quantity measured in place, or as ordered by the Contracting Officer.

The work to be done under Items 130-132 shall conform to the applicable provisions of Section 150 and M2.01.0, (MSSHB). Item 131 shall include supplying and installing heavy duty commercial grade weed barrier. Items 130 thru 132 shall be furnished and placed by the Contractor as directed by the Contracting Officer.

ITEM 130 CRUSHED STONE 3/4 INCH

ITEM 131 CRUSHED STONE 3/4 INCH WITH HEAVY DUTY WEED BLOCK

ITEM 132 CRUSHED STONE 1-1/2 INCH

A. ***MEASUREMENT AND PAYMENT***

Measurement for crushed stone and heavy duty weed block, not included in another item or as directed by the Contracting Officer, shall be in place. Payment shall be at the price per cubic yard bid in the proposal.

The work to be done under Items 134 and 135 shall conform to the applicable provisions of Section 983 and M2.02.2, (MSSHB). The contractor shall furnish and install complete in place rip rap or dumped rip rap per Items 134 and 135 as specified or as instructed by the Contracting Officer.

ITEM 134 RIP RAP

ITEM 135 DUMPED RIP RAP

A. ***MEASUREMENT AND PAYMENT***

Measurement for rip rap shall be in place and payment shall be at the price per cubic yard bid in the proposal.

ITEM 138 STONE FOR PIPE ENDS

A. ***GENERAL***

The work to be done under this item shall conform to the provisions of Section 258 and M2.02.3, (MSSHB).

B. ***MEASUREMENT AND PAYMENT***

Measurement shall be in cubic yards.

ITEM 150 FURNISH AND SPREAD CALCIUM CHLORIDE

A. ***GENERAL***

The work to be done under this item shall conform to the applicable provisions of Section 440, Subsection M9.01.0, (MSSHB). Calcium chloride shall be uniformly applied by means of a mechanical spreader or other methods as approved by the Contracting Officer.

B. ***MEASUREMENT AND PAYMENT***

Measurement for Calcium Chloride shall be in place and payment shall be at the price per pound as bid in the contract proposal.

ITEM 154 TOPSOIL EXCAVATED AND STACKED

A. ***GENERAL***

The work to be done under this item shall conform to the applicable provision of Section 120.65, (MSSHB). Also see Item 751.62, (MSSHB), Topsoil Rehandle and Spread.

B. ***MEASUREMENT AND PAYMENT***

Measurement shall be in cubic yards.

ITEM 155 TOPSOIL REHANDLED AND SPREAD

A. ***GENERAL***

The work under this item shall conform to the applicable provisions of Section 751.61, (MSSHB).

B. ***MEASUREMENT AND PAYMENT***

Measurement shall be in cubic yards.

ITEM 156 SEEDING

A. ***GENERAL***

The work to be done under this item shall conform to the provisions of Section 765, (MSSHB).

B. ***MEASUREMENT AND PAYMENT***

Measurement shall be in square yards.

ITEM 158 SODDING

A. ***GENERAL***

The work to be done under this item shall conform to the applicable provisions of Section 770, (MSSHB).

B. ***MEASUREMENT AND PAYMENT***

Measurement shall be in square yards.

ITEM 160 CLEANING UP

A. ***GENERAL***

During the progress of the work, the project area and all effected adjacent areas will be kept clean of all rubbish and surplus materials. All unneeded construction equipment will be removed and all damage repaired so as to minimize the inconvenience to the general public and private property owners.

Where rubbish or debris has washed into or been placed into water courses, ditches, gutters, drains, catch basins or elsewhere as a result of the Contractor's operation, such rubbish or debris shall be promptly removed and satisfactorily disposed of during the progress of the work. All water courses, ditches, gutters, drains, etc. shall be kept neat and clean during the progress of the work.

On or before the completion of the work, the Contractor shall, unless otherwise directed or permitted in writing, tear down and remove all temporary buildings and structures built by him; shall remove all temporary works, tools, and machinery or other construction equipment furnished by him; shall remove, acceptably disinfect, and cover all organic matter and material containing organic matter in, under, and around privies, houses and other buildings used by him; shall remove all rubbish from any ground which he has occupied; and shall leave the roads and all parts of the premises and adjacent property affected by his operations, in a neat and satisfactory condition.

The Contractor shall restore or replace, when and as directed by the Contracting Officer, all public or private property damaged by his work, equipment, or employees, to a condition at least equal to that existing immediately prior to the beginning of operations. The Contractor shall do as required all necessary highway, driveway, sidewalk, and landscaping work, and all other work not otherwise herein provided for, as specified or directed. Suitable materials, equipment, and methods shall be used for such restoration.

B. ***MEASUREMENT AND PAYMENT***

For all work, materials, and incidentals required to accomplish cleaning up, the Contractor shall receive the lump-sum price bid for Item 160. No part of this price shall be paid before the final estimate.

ITEM 165 SHEETING LEFT IN PLACE

A. ***GENERAL***

This work shall consist of furnishing and placing lumber, wood or steel sheeting of the kinds and dimensions required for trench excavation and for structures, complying with these specifications, where indicated on the plans or where directed.

B. ***MATERIALS***

Lumber and wood sheeting shall be sound Spruce, Douglas Fir, white or yellow Lodgepole or Ponderosa Pine, or Western Hemlock planking, planed on one side, tongue and grooved, and shall conform to the thickness

shown on the plans. Lumber sheeting shall not be less than nominal 4 inches thick. All lumber and wood sheeting shall be sound, well seasoned and free from defects that will impair its strength.

Steel sheeting shall be an approved standard section whether new or used, weighing not less than 22 pounds per square foot of wall.

C. ***CONSTRUCTION METHODS***

The Contractor shall furnish, put in place, and maintain such sheeting, shoring, bracing, and the like, as may be required to support the sides of excavations and to prevent any movement which could in any way injure the work, diminish the necessary width of trench or other excavation, or otherwise delay the work or endanger adjacent structures. Sheeting shall be driven and excavation work conducted in such a manner as to prevent the material in back of the sheeting from running under the sheeting and into the trench. Care should be taken to prevent voids outside of the sheeting but if voids are formed they shall be immediately filled and well rammed.

Whenever possible, sheeting shall be driven ahead of excavation to avoid loss of material from behind the sheeting, if necessary to excavate below the sheeting. Care shall be taken to avoid trimming behind the face along which the sheeting will be driven.

Bracing, rangers, and sheeting shall be fastened securely in place so that they can loosen up and fall from position.

The Contractor shall leave in place to be imbedded in the backfill or concrete all sheeting and bracing that is shown on the plans or which the Contracting Officer may direct him in writing to leave in place at any time during the progress of the work, for the purpose of preventing injury to structures or property.

D. ***MEASUREMENT AND PAYMENT***

The unit price per thousand feet board measure for lumber and/or wood sheeting shall include furnishing and placing such lumber and/or wood as left in place as specified under Item 165.

The unit price paid per pound for steel sheeting shall include full compensation for furnishing all labor, materials, tools, equipment and incidentals, and for doing all the work involved in furnishing and placing steel sheeting as shown on the plans, as specified in these specifications and as directed by the Contracting Officer.

No payment will be made for any sheeting not shown on the plans to be left in place or directed by the Contracting Officer in writing to be left in place.

No payment will be made for cut-offs of sheeting and no payment will be made for any waste.

The furnishing and placing of blocking as shown in the plans or as directed by the Contracting Officer shall be considered as incidental to the work and no separate payment will be made therefore.

ITEM 170 COMPLY WITH THE CONSERVATION COMMISSIONS ORDER OF CONDITIONS

A. ***GENERAL***

Under this item, the Contractor shall provide all labor, tools, equipment and materials required to comply with the “Order of Conditions” issued by the Worcester Conservation Commission or Massachusetts Department of Environmental Protection enclosed with the Bid Documents of the Contract for Siltation Control.

The Contractor is required to comply with all conditions of this document.

B. ***MEASUREMENT AND PAYMENT***

Payment under this item will be as a Lump Sum.

ITEM 171 INSTALLATION AND MAINTENANCE OF EROSION CONTROLS

A. ***GENERAL***

The Contractor shall provide all labor, tools, equipment and material required to install, maintain, and remove all siltation control measures shown on the approved plans, or at the direction of the contract officer.

B. ***MEASUREMENT AND PAYMENT***

Payment under this item will be by Linear Feet, complete in place.

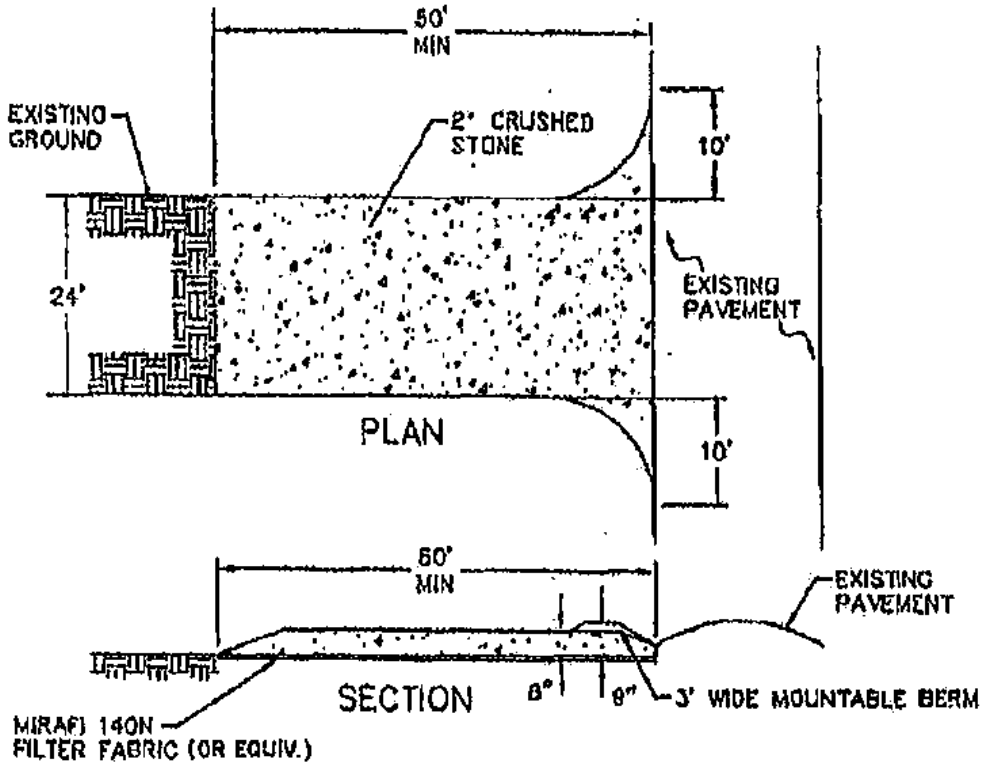

STABILIZED CONSTRUCTION ENTRANCE	CITY OF WORCESTER DEPARTMENT OF PUBLIC WORKS ENGINEERING SCALE NTS DATE JAN 2000

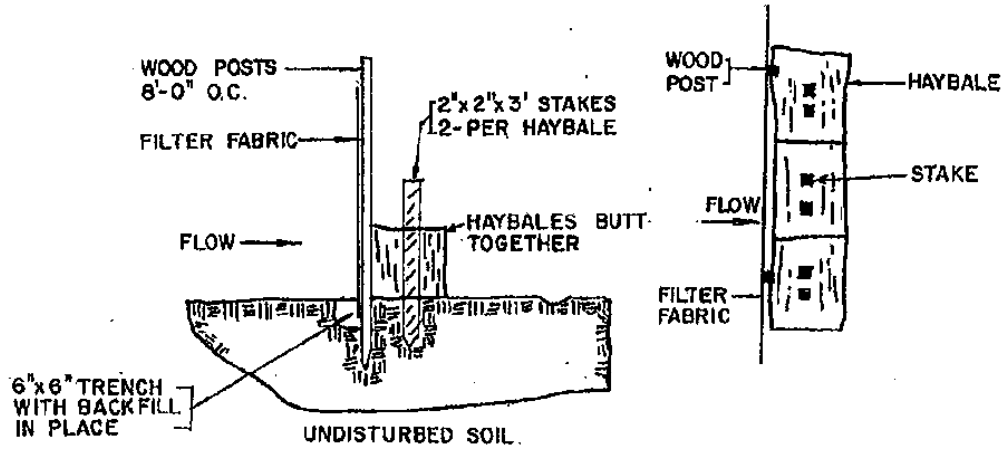

CROSS SECTION

PLAN VIEW

NOT TO SCALE

SILTATION CONTROL	CITY OF WORCESTER DEPARTMENT OF PUBLIC WORKS ENGINEERING DATE: JAN 1997

SECTION 200 - TRENCH PIPE WORK

Under Item 210 the work specified shall consist of cleaning and closed circuit television inspection of all pipes shown in the contract documents or as directed by the Contracting Officer.

ITEM 210.08 CLEAN AND CCTV 8" PIPE

ITEM 210.10 CLEAN AND CCTV 10" PIPE

ITEM 210.12 CLEAN AND CCTV 12" PIPE

ITEM 210.15 CLEAN AND CCTV 15" PIPE

ITEM 210.16 CLEAN AND CCTV 16" PIPE

ITEM 210.18 CLEAN AND CCTV 18" PIPE

ITEM 210.20 CLEAN AND CCTV 20" PIPE

ITEM 210.21 CLEAN AND CCTV 21" PIPE

ITEM 210.24 CLEAN AND CCTV 24" PIPE

ITEM 210.27 CLEAN AND CCTV 27" PIPE

ITEM 210.30 CLEAN AND CCTV 30" PIPE

ITEM 210.32 CLEAN AND CCTV 32" PIPE

ITEM 210.33 CLEAN AND CCTV 33" PIPE

ITEM 210.34 CLEAN AND CCTV 34" PIPE

ITEM 210.36 CLEAN AND CCTV 36" PIPE

A. ***GENERAL REQUIREMENTS***

The contractor shall furnish all materials, equipment, gauges, pumps, etc. for performing work under this item. For sewer construction projects (new or rehabilitation), a sketch will be required to show any deviation from the design drawings.

B. ***PIPE CLEANING***

The Contractor may elect to use either high velocity jet, or mechanically powered equipment, as described in the NASSCO Standard Specifications. Selection of equipment shall be based upon field conditions such as access to manholes, quantity of debris, size of sewer, depth of flow, etc.

All sludge, dirt, sand, rocks, grease, and other solid or semisolid material resulting from the cleaning operation shall be disposed of in accordance with all applicable regulations and in a method acceptable to the Owner. Pipe cleaning shall be performed in advance of pipe television inspection.

The Contractor shall be responsible for the legal disposal of all debris removed from the sewers during the cleaning operation including any costs incurred. The Contractor shall not expect the Owner to provide a dump site.

Acceptance by the Engineer of the cleaning results will be based on the results of television inspection. If the results are unsatisfactory, the Contractor shall repeat the cleaning until accepted by the Engineer at no additional cost to the Owner.

C. ***TELEVISION INSPECTION***

The contractor will submit closed circuit television camera inspection (CCTV) digital files and reports to the Department of Public Works and Parks on an external hard drive for review and approval. The external hard drive will become the property of the City of Worcester, Department of Public Works & Parks.

The Contractor shall maintain printed television inspection logs of sewer segments under this contract.

The log sheet(s) at a minimum shall clearly identify:

1. Project Name
2. Street Location, Name, Intersection, Station
3. Date of inspection

4. Total Length of Line Inspected
5. Line Size(s)/Joint Spacing/Type
6. Line and Manhole(s) Condition

Significant observations such as service connections, offset joints, drop joints, broken/cracked pipe, protruding services, roots, collapsed sections, infiltration, presence of scale and corrosion and other discernible features.

All logs shall be provided to the Engineer in PDF format (one log per PDF file) at the completion of the project.

All television inspection shall be recorded in MPEG2 format (minimum) in accordance with NASCCO specifications and shall include a PACP exchange database that holds all inspection results including pictures and video for import to the City's maintenance management software, "Lucity". Inspections shall be recorded one at a time with each segment recorded as a separate file on the external hard drive.

The contractor shall provide two (2) original and labeled copies of each external hard drive to the Engineer. All external hard drives shall have a typed label with the following:

All cctv inspection work shall be performed by a NASSCO certified PACP inspector. Licenses shall be made available before the start of the contract.

[Date work was performed/Contractor/Contract #/]

Filenames shall contain pipe wASSET_ID identification numbers. Stationing shall be recorded at a minimum of every foot and at all points of interest, to allow instant access to any given footage. Each street shall be tested in its entirety and all associated reports and videos must be submitted on the same external hard drive.

Filenames for television inspection (video and report files) shall be provided as following:

WASSET_ID_Date_Media_Iteration

Where "wASSET_ID" is the identifying number for the pipe asset, "Date" is in the format "YYYYMMDD", "Media" can be either "Report", "Video", "Picture" or "Sonar", and "Iteration" starts at "1" and increases by one (1) for each subsequent video in the same pipe asset. The "Iteration" does not need to increase if the same wASSET_ID is inspected on a different day. The date provides the distinction. For example, if pipe wASSET_ID SM26765 on Dallas Street was inspected on August 1st, 2013, the video file name would be:

SM26765_20130801_Video_1

and the Report file name would be:

SM26765_20130801_Report_1

In the event of a reverse setup, the next filenames would be:

SM26765_20130801_Video_2

SM26765_20130801_Report_2

In the event the pipe segment was inspected on August 2nd, the next filenames would be:

SM26765_20130802_Video_1

SM26765_20130802_Report_1

D. ***MEASUREMENT AND PAYMENT***

Payment for work under this item shall be by the linear foot for each complete segment as specified in the contract documents. No payment will be given for incomplete segments unless authorized by the Contracting Officer.

Under Items 220 - 223 the work specified shall consist of excavation, backfilling and compaction of all materials encountered in the trenching for sewer mains and sewer services and the disposal of any and all surplus material from these excavations, as shown on the plans and specified herein. Unless shown on design plans or specified by the Contracting Officer, excavation and backfill for sanitary and surface sewers will be paid for as a common trench. The pay limits of the trench are those shown on a plan titled Typical Trench.

ITEM 220.04 TRENCH EXCAVATION AND BACKFILL, FURNISH AND INSTALL 4" PVC

ITEM 220.06	**TRENCH EXCAVATION AND BACKFILL, FURNISH AND INSTALL 6" PVC**
ITEM 220.08	**TRENCH EXCAVATION AND BACKFILL, FURNISH AND INSTALL 8" PVC**
ITEM 220.10	**TRENCH EXCAVATION AND BACKFILL FURNISH AND INSTALL 10" PVC**
ITEM 220.12	**TRENCH EXCAVATION AND BACKFILL, FURNISH AND INSTALL 12" PVC**
ITEM 220.15	**TRENCH EXCAVATION AND BACKFILL, FURNISH AND INSTALL 15" PVC**
ITEM 220.18	**TRENCH EXCAVATION AND BACKFILL, FURNISH AND INSTALL 18" PVC**
ITEM 220.21	**TRENCH EXCAVATION AND BACKFILL, FURNISH AND INSTALL 21" PVC**
ITEM 220.24	**TRENCH EXCAVATION AND BACKFILL, FURNISH AND INSTALL 24" PVC**
ITEM 221.0812	**TRENCH EXCAVATION AND BACKFILL, FURNISH AND INSTALL 8" PVC & 12" RCP**
ITEM 221.0815	**TRENCH EXCAVATION AND BACKFILL, FURNISH AND INSTALL 8" PVC & 15" RCP**
ITEM 221.0818	**TRENCH EXCAVATION AND BACKFILL, FURNISH AND INSTALL 8" PVC & 18" RCP**
ITEM 221.0821	**TRENCH EXCAVATION AND BACKFILL, FURNISH AND INSTALL 8" PVC & 21" RCP**
ITEM 221.0824	**TRENCH EXCAVATION AND BACKFILL, FURNISH AND INSTALL 8" PVC & 24" RCP**
ITEM 221.0827	**TRENCH EXCAVATION AND BACKFILL, FURNISH AND INSTALL 8" PVC & 27" RCP**
ITEM 221.0830	**TRENCH EXCAVATION AND BACKFILL, FURNISH AND INSTALL 8" PVC & 30" RCP**
ITEM 221.0836	**TRENCH EXCAVATION AND BACKFILL, FURNISH AND INSTALL 8" PVC & 36" RCP**
ITEM 221.0842	**TRENCH EXCAVATION AND BACKFILL, FURNISH AND INSTALL 8" PVC & 42" RCP**
ITEM 221.1012	**TRENCH EXCAVATION AND BACKFILL, FURNISH AND INSTALL 10" PVC & 12" RCP**
ITEM 221.1015	**TRENCH EXCAVATION AND BACKFILL, FURNISH AND INSTALL 10" PVC & 15" RCP**
ITEM 221.1018	**TRENCH EXCAVATION AND BACKFILL, FURNISH AND INSTALL 10" PVC & 18" RCP**
ITEM 221.1021	**TRENCH EXCAVATION AND BACKFILL, FURNISH AND INSTALL 10" PVC & 21" RCP**
ITEM 221.1024	**TRENCH EXCAVATION AND BACKFILL, FURNISH AND INSTALL 10" PVC & 24" RCP**
ITEM 221.1027	**TRENCH EXCAVATION AND BACKFILL, FURNISH AND INSTALL 10" PVC & 27" RCP**
ITEM 221.1030	**TRENCH EXCAVATION AND BACKFILL, FURNISH AND INSTALL 10" PVC & 30" RCP**
ITEM 221.1036	**TRENCH EXCAVATION AND BACKFILL, FURNISH AND INSTALL 10" PVC & 36" RCP**
ITEM 221.1042	**TRENCH EXCAVATION AND BACKFILL, FURNISH AND INSTALL 10" PVC & 42" RCP**
ITEM 221.1212	**TRENCH EXCAVATION AND BACKFILL, FURNISH AND INSTALL 12” PVC & 12" RCP**
ITEM 221.1215	**TRENCH EXCAVATION AND BACKFILL, FURNISH AND INSTALL 12" PVC & 15" RCP**
ITEM 221.1218	**TRENCH EXCAVATION AND BACKFILL, FURNISH AND INSTALL 12" PVC & 18" RCP**
ITEM 221.1221	**TRENCH EXCAVATION AND BACKFILL, FURNISH AND INSTALL 12" PVC & 21" RCP**
ITEM 221.1224	**TRENCH EXCAVATION AND BACKFILL, FURNISH AND INSTALL 12" PVC & 24" RCP**
ITEM 221.1227	**TRENCH EXCAVATION AND BACKFILL, FURNISH AND INSTALL 12" PVC & 27" RCP**
ITEM 221.1230	**TRENCH EXCAVATION AND BACKFILL, FURNISH AND INSTALL 12" PVC & 30" RCP**
ITEM 221.1236	**TRENCH EXCAVATION AND BACKFILL, FURNISH AND INSTALL 12" PVC & 36" RCP**
ITEM 221.1242	**TRENCH EXCAVATION AND BACKFILL, FURNISH AND INSTALL 12" PVC & 42" RCP**
ITEM 221.1515	**TRENCH EXCAVATION AND BACKFILL, FURNISH AND INSTALL 15" PVC & 15" RCP**
ITEM 221.1518	**TRENCH EXCAVATION AND BACKFILL, FURNISH AND INSTALL 15" PVC & 18" RCP**
ITEM 221.1521	**TRENCH EXCAVATION AND BACKFILL, FURNISH AND INSTALL 15" PVC & 21" RCP**
ITEM 221.1524	**TRENCH EXCAVATION AND BACKFILL, FURNISH AND INSTALL 15" PVC & 24" RCP**
ITEM 221.1527	**TRENCH EXCAVATION AND BACKFILL, FURNISH AND INSTALL 15" PVC & 27" RCP**

ITEM 221.1530	**TRENCH EXCAVATION AND BACKFILL, FURNISH AND INSTALL 15" PVC & 30" RCP**
ITEM 221.1536	**TRENCH EXCAVATION AND BACKFILL, FURNISH AND INSTALL 15" PVC & 36" RCP**
ITEM 221.1542	**TRENCH EXCAVATION AND BACKFILL, FURNISH AND INSTALL 15" PVC & 42" RCP**
ITEM 221.1818	**TRENCH EXCAVATION AND BACKFILL, FURNISH AND INSTALL 18" PVC & 18" RCP**
ITEM 221.1821	**TRENCH EXCAVATION AND BACKFILL, FURNISH AND INSTALL 18" PVC & 21" RCP**
ITEM 221.1824	**TRENCH EXCAVATION AND BACKFILL, FURNISH AND INSTALL 18" PVC & 24" RCP**
ITEM 221.1827	**TRENCH EXCAVATION AND BACKFILL, FURNISH AND INSTALL 18" PVC & 27" RCP**
ITEM 221.1830	**TRENCH EXCAVATION AND BACKFILL, FURNISH AND INSTALL 18" PVC & 30" RCP**
ITEM 221.1836	**TRENCH EXCAVATION AND BACKFILL, FURNISH AND INSTALL 18" PVC & 36" RCP**
ITEM 221.1842	**TRENCH EXCAVATION AND BACKFILL, FURNISH AND INSTALL 18" PVC & 42" RCP**
ITEM 221.2118	**TRENCH EXCAVATION AND BACKFILL, FURNISH AND INSTALL 21" PVC & 18" RCP**
ITEM 221.2121	**TRENCH EXCAVATION AND BACKFILL, FURNISH AND INSTALL 21" PVC & 21" RCP**
ITEM 221.2124	**TRENCH EXCAVATION AND BACKFILL, FURNISH AND INSTALL 21" PVC & 24" RCP**
ITEM 221.2127	**TRENCH EXCAVATION AND BACKFILL, FURNISH AND INSTALL 21" PVC & 27" RCP**
ITEM 221.2130	**TRENCH EXCAVATION AND BACKFILL, FURNISH AND INSTALL 21" PVC & 30" RCP**
ITEM 221.2136	**TRENCH EXCAVATION AND BACKFILL, FURNISH AND INSTALL 21" PVC & 36" RCP**
ITEM 221.2142	**TRENCH EXCAVATION AND BACKFILL, FURNISH AND INSTALL 21" PVC & 42" RCP**
ITEM 222.12	**TRENCH EXCAVATION AND BACKFILL, FURNISH AND INSTALL 12" RCP**
ITEM 222.15	**TRENCH EXCAVATION AND BACKFILL, FURNISH AND INSTALL 15" RCP**
ITEM 222.18	**TRENCH EXCAVATION AND BACKFILL, FURNISH AND INSTALL 18" RCP**
ITEM 222.21	**TRENCH EXCAVATION AND BACKFILL, FURNISH AND INSTALL 21" RCP**
ITEM 222.24	**TRENCH EXCAVATION AND BACKFILL, FURNISH AND INSTALL 24" RCP**
ITEM 222.27	**TRENCH EXCAVATION AND BACKFILL, FURNISH AND INSTALL 27" RCP**
ITEM 222.30	**TRENCH EXCAVATION AND BACKFILL, FURNISH AND INSTALL 30" RCP**
ITEM 222.36	**TRENCH EXCAVATION AND BACKFILL, FURNISH AND INSTALL 36" RCP**
ITEM 222.42	**TRENCH EXCAVATION AND BACKFILL, FURNISH AND INSTALL 42" RCP**
ITEM 222.66	**TRENCH EXCAVATION AND BACKFILL, FURNISH AND INSTALL 66" RCP**
ITEM 222.36	**TRENCH EXCAVATION AND BACKFILL, FURNISH AND INSTALL 36" RCP**
ITEM 222.72	**TRENCH EXCAVATION AND BACKFILL, FURNISH AND INSTALL 72" RCP**
ITEM 222.84	**TRENCH EXCAVATION AND BACKFILL, FURNISH AND INSTALL 84" RCP**
ITEM 223.18	**TRENCH EXCAVATION AND BACKFILL, FURNISH AND INSTALL 18" RCP EPOXY COATED**
ITEM 223.21	**TRENCH EXCAVATION AND BACKFILL, FURNISH AND INSTALL 21" RCP EPOXY COATED**
ITEM 223.24	**TRENCH EXCAVATION AND BACKFILL, FURNISH AND INSTALL 24" RCP EPOXY COATED**
ITEM 223.27	**TRENCH EXCAVATION AND BACKFILL, FURNISH AND INSTALL 27" RCP EPOXY COATED**
ITEM 223.30	**TRENCH EXCAVATION AND BACKFILL, FURNISH AND INSTALL 30" RCP EPOXY COATED**
ITEM 223.36	**TRENCH EXCAVATION AND BACKFILL, FURNISH AND INSTALL 36" RCP EPOXY COATED**

ITEM 223.42 TRENCH EXCAVATION AND BACKFILL, FURNISH AND INSTALL 42" RCP EPOXY COATED

ITEM 223.48 TRENCH EXCAVATION AND BACKFILL, FURNISH AND INSTALL 48" RCP EPOXY COATED

ITEM 223.54 TRENCH EXCAVATION AND BACKFILL, FURNISH AND INSTALL 54" RCP EPOXY COATED

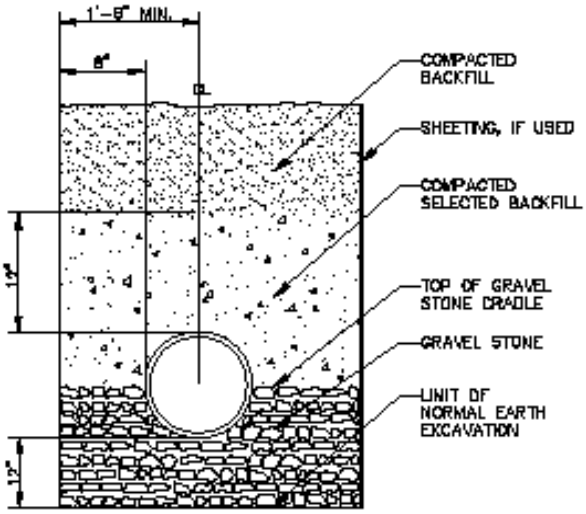

TYPICAL DRAIN MAIN TRENCH

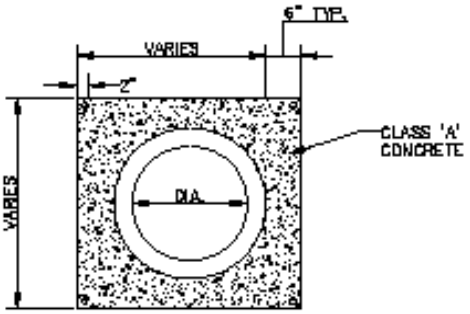

CONCRETE ENCASEMENT DETAIL

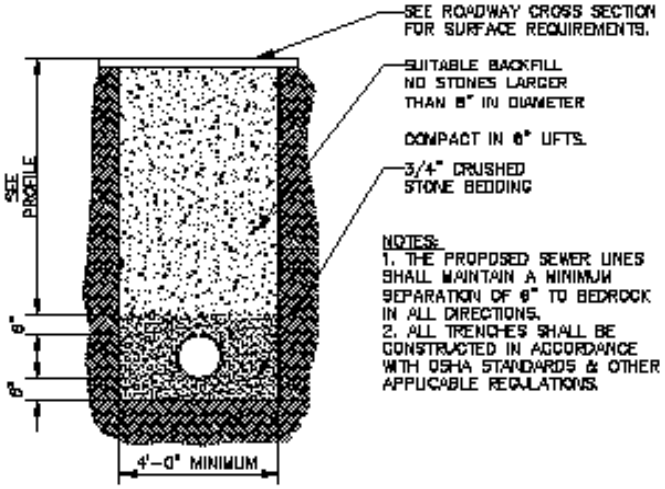

NOTES:
1. THE PROPOSED SEWER LINES SHALL MAINTAIN A MINIMUM SEPARATION OF 6" TO BEDROCK IN ALL DIRECTIONS.
2. ALL TRENCHES SHALL BE CONSTRUCTED IN ACCORDANCE WITH OSHA STANDARDS & OTHER APPLICABLE REGULATIONS.

TYPICAL SEWER MAIN TRENCH

TYPICAL TRENCH DETAILS

SEPTEMBER 25, 2009		DEPARTMENT OF PUBLIC WORKS AND PARKS Engineering Division 20 East Worcester St, Worcester MA 01604				
TYPICAL TRENCH DETAILS						
NOT TO SCALE						
SHEET 1 OF 1			NO.	DATE	DESCRIPTION	BY

ON PROPERTY IN BIT. CONC.

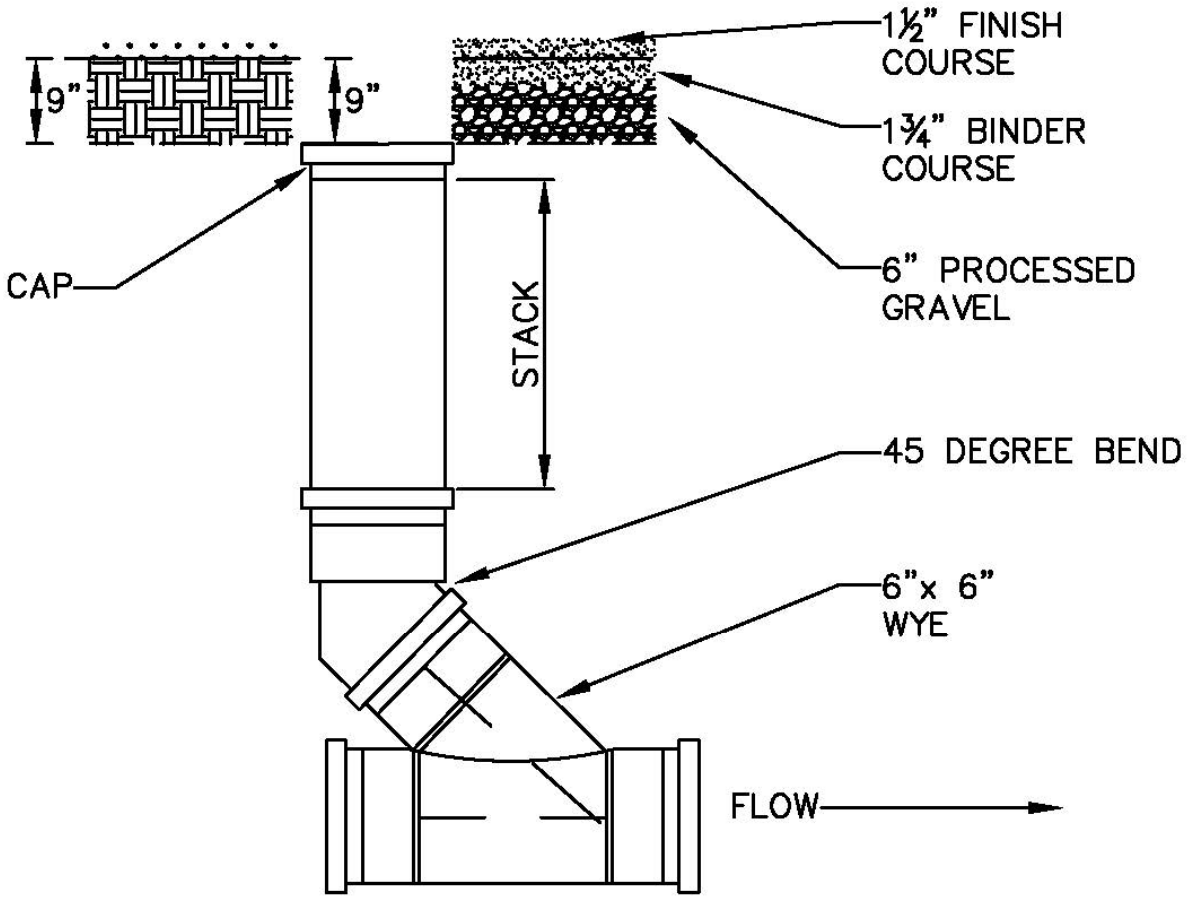

TYPICAL CLEANOUT

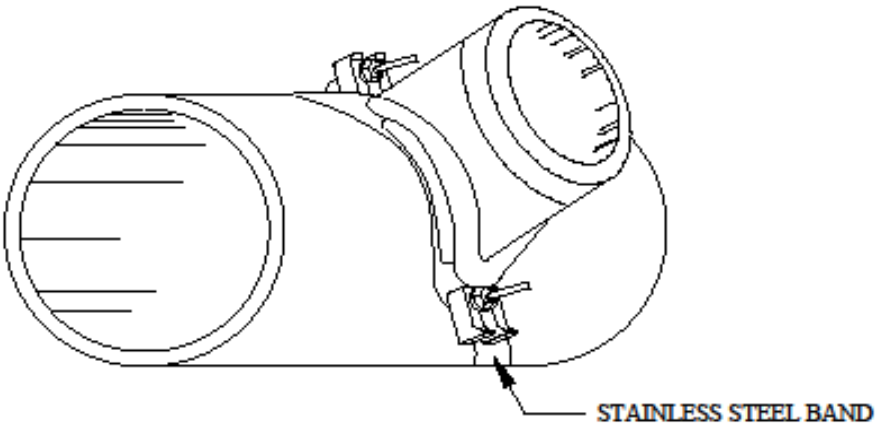

NOTE:
1. CORE 6" DIAMETER HOLE
2. USE NEOPRENE GASKET

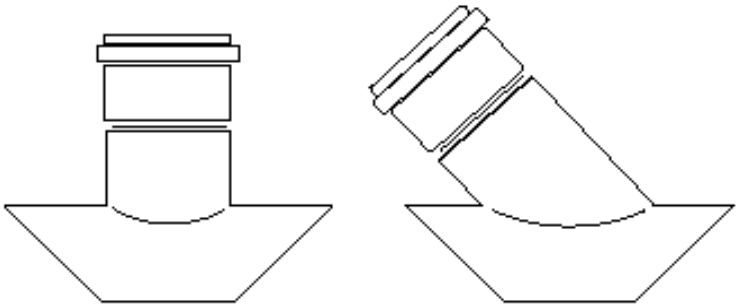

TYPICAL DETAIL OF WYE & TEE SADDLES FOR 6" LATERAL SEWER CONNECTIONS

SEPTEMBER 25, 2009		DEPARTMENT OF PUBLIC WORKS AND PARKS Engineering Division 20 East Worcester St, Worcester MA 01604				
WYE & TEE SADDLES FOR 6" LATERAL SEWER CONNECTIONS						
NOT TO SCALE						
SHEET 1 OF 1			NO.	DATE	DESCRIPTION	BY

A. ***DESCRIPTION***

It is the responsibility of the Contractor to furnish and install all pipe segments and associated structures per the design plans. All excavations, except as otherwise specified or permitted shall be made in the open. No tunneling or lining will be permitted except by order or permission obtained from the Contracting Officer in writing. If permitted, all lining will be completed by the contractor at no additional cost above the unit bid price for the pipe installation.

The Contractor shall make excavations in such manner and of such widths as will give suitable room for building the structures or laying and jointing pipe; shall furnish and place all sheeting, bracing and supports; shall do all coffer-damming, pumping and draining; and shall render the bottom of the excavation firm and dry and in all respects acceptable. In no case shall the earth be plowed, scraped, or dug by machinery so near to the finished subgrade as to result in disturbance of material below said subgrade.

SEPARATION OF SURFACE MATERIALS

From areas where excavations are to be made, loam and topsoil shall be carefully removed and separately stored to be used again as directed, or if the Contractor prefers not to separate surface materials he shall furnish, as directed, and at no additional cost to the City, loam and topsoil at least equal in quantity and quality to that excavated.

PREPARATION OF SUBGRADE

From areas upon which embankments are to be built or material is to be placed for grading, the Contractor shall remove loam and topsoil, loose vegetable matter, stumps, large roots, etc. The subgrade shall be shaped as indicated on the drawings and shall be so prepared that the first layer or new material to be placed, on the subgrade, shall be firmly bonded thereto.

CUTTING THROUGH PAVEMENT – IN STREETS

Where existing bituminous concrete pavement is to be removed to allow for excavation, the pavement shall be pre-cut in a neat, clean straight line with a pavement breaker or saw. The minimum width of any excavation shall be 24 inches. Pavement edges shall be trimmed to a vertical face and neatly aligned parallel and perpendicular to the centerline of the trench. Pulverization of a trench will be considered an acceptable procedure provided that the trench is cut in a neat, straight line with a pavement breaker or saw prior to permanent restoration. The City may prohibit heavy-duty pavement breakers when their use endangers existing substructures or other property. Unstable pavement shall be removed over cave-ins and breaks and the subgrade shall be treated as the main trench. The Contractor shall not be required to pay for the repair of any pavement damage existing prior to the excavation unless the Contractor's cut results in small floating sections that may be unstable. If this occurs, the Contractor shall remove the unstable portion and the area shall be treated as part of the excavation. The maximum length of open trench permissible at any time shall be two hundred (200) feet. No greater length shall be opened for pavement removal, excavation, construction, backfilling, patching or any other operation without written permission of the City.

CUTTING THROUGH PAVEMENT - IN SIDEWALKS

All provisions of CUTTING THROUGH PAVEMENT – IN STREETS above shall also apply to sidewalks. On cement concrete sidewalks, individual concrete panels will be replaced to the nearest joint or score line the full width of the sidewalk.

SHEETING AND BRACING

The Contractor shall furnish, put in place, and maintain such sheeting and bracing, etc., as may be required to support the sides of the excavation and to prevent any pavement of earth which would in any way diminish the width of the excavation below that is necessary for proper construction, or otherwise injure or delay the work or endanger adjacent structures.

Whenever possible, sheeting shall be driven ahead of the excavation to avoid loss of material from behind the sheeting. If necessary to excavate below the sheeting, care shall be taken to avoid trimming behind the face along which the sheeting will be driven. Care shall be taken to prevent voids outside of the sheeting, but if voidsare formed, they shall be immediately filled with sand and compacted.

The Contractor shall leave in place to be embedded in the backfill or concrete all sheeting, bracing, etc., which is shown on the drawings to be left in place, and shall also leave in place any and all other sheeting, bracing, etc., not shown on the drawings which the Contracting Officer may direct him in writing to leave in place at any time during the progress of the work, for the purpose of preventing injury to structures or property. Sheeting to be left in place shall be cut off at an elevation as specified or as directed by the Contracting Officer.

All sheeting and bracing not to be left in place shall be carefully removed in such a manner as not to endanger the construction or other structures. All voids left or caused by withdrawal of sheeting shall be immediately backfilled with approved material and compacted by ramming with tools especially adapted to that purpose, by watering, or otherwise as may be directed. As specified under Sheeting Left in Place, the Contractor shall be paid only for sheeting left in place.

DRAINAGE

The Contractor shall at all times during construction provide and maintain ample means and devices with which to remove promptly and dispose properly of all water entering trenches and other excavations and keep said excavations dry until the structures, pipes and appurtenances to be built therein are completed. All water pumped or drained from the work shall be disposed of in a suitable manner without undue interference with other work or damage to pavements or other surfaces. Suitable temporary channels shall be provided for water that may flow along or across the site of the work.

DRAINAGE WELLPOINT SYSTEM

The Contractor shall, if required, dewater the excavation by means of an efficient dewatering system to drain the soil and prevent saturated soil from flowing into the excavation. The dewatering system shall be designed for this type of service and the pumping unit used shall be adequately designed and capable of dewatering the excavation.

If required, the installation of the dewatering system shall be done under the supervision of a competent representative of the manufacturer. Any special work shall be done, such as surrounding the system with sand or gravel, to ensure that the system shall operate as herein intended for the unwatering excavation.

TRENCH HAND EXCAVATION

When approaching underground pipes, conduits, or other structures, digging by machinery shall be discontinued and the excavation shall be done by hand. Such hand excavation when incidental to normal excavation shall be done at no expense to the City.

DEPTH OF TRENCH

Trenches shall be excavated to such depths as will permit the pipe to be laid to the elevations or slopes indicated on the drawings, and to uniform slope between indicated elevations.

PROTECTION OF EXISTING STRUCTURES

All existing pipes, conduits, poles, wires, fences, curbing, property line markers, and other structures which in the opinion of the Contracting Officer, are not required to be changed in location shall be carefully supported and protected from damage by the Contractor, and in case of damage, they shall be restored by him, without compensation therefore, to as good condition as that in which they were found.

Attention is called to the fact that there are water pipes, gas pipes, drain, and other utilities located throughout the project limits. The Contractor shall make himself fully aware of the location of these utilities prior to beginning the new work.

RELOCATING EXISTING STRUCTURES

Whenever it becomes necessary, in the opinion of the Contracting Officer, to change the location of any existing pipe, or other structures not otherwise provided for in these specifications, the Contractor, if ordered, shall do the whole or such portions of the work of making such changes as the Contracting Officer may require, and the work shall be paid for as extra work.

CARE AND RESTORATION OF PROPERTY

The Contractor shall enclose the trunks of shade trees adjacent to this work with tree fence of such height as is required to protect them from injury from piled materials or from equipment, or from his operations, or otherwise due to his work. Excavation machinery and cranes shall be handled with care to prevent damage to shade trees, particularly to overhanging branches and limbs.

Branches, limbs, and roots shall not be cut, except by permission of the Contracting Officer. Any cutting shall be smoothly and neatly done without splitting or crushing. In case of cutting or unavoidable damage to branches, limbs, and trunks of trees, the cut or damaged portions shall be nearly trimmed and covered with an application of grafting wax or tree healing paint as directed.

Cultivated hedges, shrubs, and plants that might be damaged by the Contractor's operations shall be protected by suitable means, or shall be dug up and temporarily replanted and cared for. After the construction operations

have been substantially completed, they shall be replanted in their original positions and cared for until growth is re-established. If cultivated hedges, shrubs, and plants are injured to such degree as to affect their growth or diminish their beauty or usefulness, they shall be replaced by items of kind and quality at least equal to kind and quality existing at the start of the work.

On paved surfaces the Contractor shall not use or operate tractors, bulldozers, or other power operated equipment, the treads or wheels of which are so shaped to cut or otherwise damage such surfaces.

Any surfaces that have been damaged by the Contractor's operations shall be restored to the condition at least equal to that in which they were found immediately prior to the beginning of operations. Suitable materials and methods shall be used for such restoration.

The restoration of existing property or structures shall be done as promptly as practicable and shall not be left until the completion of the contract.

PUBLIC CONVENIENCE AND BRIDGING TRENCHES

The Contractor shall so conduct his operation as to offer the least possible obstruction and inconvenience to the public and he shall have under construction no greater length or amount of work than he can prosecute with due regard to the rights of the public.

Vehicular and pedestrian traffic will be maintained on all streets located within the project unless permission is received in writing from the Contracting Officer or his representative to close the street.

The Contractor shall give one weeks' notice to the Contracting Officer and to the City Traffic Engineer of his desire for street closings and detours.

Where construction operations are such that an open ditch must be maintained until all of the work is completed therein, the Contractor must provide safe bridging of the trench so that vehicular and pedestrian traffic will be maintained over the trench until all construction is completed in that section of the ditch. Also, the Contractor shall provide suitable and safe bridges and other crossings where required to provide access to private property during construction and shall remove said structures thereafter.

Full compensation for conforming to the requirements of this section shall be considered as included in the prices paid for the various contract items of work and no additional compensation will be allowed therefore.

DISPOSAL OF MATERIALS

The most suitable material from excavations shall be used for backfilling around structures and for backfilling in open trenches as specified below.

All surplus excavated material and all unsuitable material shall be removed from the site of the work and be disposed of by the Contractor without additional compensation.

AMOUNT OF OPEN EXCAVATION

The amount of excavation open at any one time will be controlled by project conditions, but shall always be confined to the limits as approved by the Contracting Officer.

UNAUTHORIZED EXCAVATIONS

If the bottom of any excavation is being taken out beyond the limits shown on the drawings, or approved by the Contracting Officer, it shall be backfilled at the Contractor's expense with crushed stone as required by the Contracting Officer.

ELIMINATION OF UNSUITABLE MATERIAL

If, in the opinion of the Contracting Officer, the material at or below the point to which excavation would normally be carried is unsuitable for foundation, it shall be removed to such widths and depths as he may direct and be replaced with crushed stone of approved size under Items 130 - 132.

BACKFILLING AROUND STRUCTURES AND UTILITIES

As soon as practical after the pipes and masonry have been installed and the concrete has acquired a suitable degree of hardness, special leakage tests, if required, shall be made after which backfilling procedures shall begin and shall thereafter be prosecuted expeditiously. Approved Select Common Fill, in compliance with Item #124, shall be used to backfill around structures. Backfilling procedures shall conform to all applicable provisions of this section. JETTING MAY BE CONSIDERED AS A FORM OF COMPACTION AS DIRECTED BY THE CONTRACTING OFFICER.

In the event that 95% compaction cannot be achieved due to the location of existing utilities, the Contractor may be required to use excavatable Controlled Density Fill (CDF) to backfill around utilities. CDF shall conform to Item #446.3 and be paid for by the cubic yard complete in place.

BACKFILLING IN OPEN TRENCH

Pipelines shall be installed as shown on the Typical Trench Details above. Single sanitary pipelines shall be installed in an envelope of stone from 6 inches below the pipeline to 6 inches above the pipeline. Single surface pipelines shall be installed in an envelope of stone from 6 inches below the pipeline to the spring-line of the pipe. In typical trenches containing two (2) pipe lines, the limits of the stone shall be from 6 inches below the lowest pipe line to the center elevation of the higher pipeline. Select common fill shall be placed and thoroughly compacted by means of mechanical or pneumatic tamping up to a level of one (1) foot above the top of the pipe.

The backfilling of the trench shall follow immediately after construction of the pipeline and appurtenances.

The backfilling of the trench shall be made with selected common fill from the excavation and conform to Item #124, Ordinary Borrow/Selected Common Fill.

Prior to beginning backfill operations, the contractor shall be responsible for contacting the Contracting Officer to obtain a soil sample. The soil sample will then be forwarded to an approved material-testing agency to insure its compliance with the project's specifications. A maximum laboratory dry density of the soil will be determined in accordance with ASTM D698. It will benefit the contractor to provide a soil sample prior to the beginning of the project. This will allow field density test values to be calculated, as the excavation is being backfilled and allow for additional passes with compaction equipment, if necessary. It will also be the responsibility of the contractor to notify the Contracting Officer if any change in soil characteristics occurs.

Approved backfill material shall be placed in lifts not to exceed ten (10) to twelve (12) inches and thoroughly compacted by mechanical or pneumatic compactors to at least ninety-five per cent (95%) of the soil's maximum laboratory dry density.

Adequate moisture content in a backfill material is essential to achieve effective compaction. It will be the Contractor's responsibility to adjust the moisture content of the soil as necessary to achieve the specified compaction.

An approved material testing agency or Contracting Officer will then perform field density testing. Density testing will be performed at intervals of one (1) test per one hundred (100) linear feet of the compacted lift. In the event that the project is of a short duration or begins prior to obtaining the soil's maximum laboratory dry density (which is necessary in determining field density test results), the contractor shall assume full responsibility for re-excavating and re-compacting areas of failed field density tests.

Due to the hazardous nature of performing field density testing in deep excavations (6 feet or deeper), the contractor shall be responsible for establishing a method of compaction using mechanical or pneumatic compactors that assures each lift is compacted to at least 95% of the soil's maximum laboratory dry density.

As the excavation is brought to grade and field density tests are taken, the Contracting Officer, along with the contractor, shall establish a sufficient compaction method necessary to achieve at least ninety-five per cent (95%) of the material's maximum laboratory dry density based on the type of compaction equipment, number of passes and existing soil type and moisture content.

BUCKET WHACKING WILL NOT BE PERMITTED AS A MEANS OF COMPACTION.

In public or private streets excavated for sewer mains or sewer services, the top of the selected common fill shall be left one (1) foot below the bottom of the existing pavement surface. The remainder of the trench shall be backfilled with gravel borrow, conforming to MHD Standard, Section M1.03.0, Type b. this layer of gravel borrow shall form the sub-base of the road. This shall be a subsidiary obligation of the Contractor at no additional cost to the City of Worcester.

On Private Streets, the Contracting Officer may require that additional gravel borrow be placed on the surface of the backfilled trench to a reasonable depth and width. This will be done to cover part of, or even the entire, traveled way to eliminate impassable traffic conditions. This shall be in effect for one (1) year after completion of the work.

EXCAVATING AND BACKFILLING TRENCHES IN NEW STREETS LESS THAN FIVE (5) YEARS OLD

All applicable provisions of CUTTING THROUGH PAVEMENT – IN STREETS shall apply to new streets less than five (5) years old. The date used to determine the age of a street shall be the date of final paving. When

excavating trenches in new streets less than five (5) years old, all material excavated shall be removed from the project site. No material shall be placed on the roadway. All excavated material shall be loaded directly into a dump truck for disposal off site. Upon completion of water, sewer and/or utility work, a one- (1) foot envelope of approved pipe bedding material shall be placed over installed lines. The trench shall then be backfilled using excavatable Controlled Density Fill (CDF), Type 2E. For rigid base roads, the trench shall be filled with CDF to the bottom of the rigid base. Prior to backfilling with CDF, the Contractor may be required to notify the Contracting Officer for the purpose of obtaining a sample for compressive strength testing.

B. ***SANITARY SEWERS***

GENERAL

Under this item the Contractor shall furnish all labor, tools, equipment, pipe and fittings, adapters, couplings, stoppers and/or plugs, jointing materials and screened gravel required to handle, lay and joint pipe for sanitary sewers, including tee connections, Y-branches and pipe for chimneys. All house and/or building connections shall be required to maintain any flows in existing sewer lines that are affected by his work. The Contractor is responsible for locating, maintaining and connecting all existing connections that are affected by his work. The Contractor shall not discharge sewage onto roadways or into surface sewers during the progress of his work. Where applicable the connection shall be Kor-N-Tee as manufactured by NPC Systems, Inc., Milford N.H., or equal.

PIPES AND FITTINGS

The type of pipe and fittings to be used for sanitary sewers shall be as specified in the proposal and shall be made of (1) cast and ductile iron; (2) poly (vinyl chloride) plastic; and (3) pre-cast, reinforced concrete. Each type of pipe and fitting shall meet the standards specified herein. Other types of pipe and fittings may be used for sanitary sewers and will be designated under appropriate items in the specifications and proposal. Where specific standards are referred to in the specifications, it is understood and agreed that they shall include all the revisions and amendments thereto. The class and type of pipe and fittings shall be shown on the plans.

CAST AND DUCTILE IRON PIPE

Cast and ductile iron pipe and fittings shall conform to the following standards:

1. American National Standard ANSI A 21.1 (AWWA HI) for thickness design of Cast-Iron Pipe.
2. American National Standard ANSI 21.50 (AWWA H3) for thickness design of Ductile Iron Pipe.
3. American National Standard ANSI A 21.6 (AWWA C 106) for Cast-Iron Pipe centrifugally cast in Metal Molds, for water and other liquids with push-on, mechanical and/or bell-and-spigot joints.
4. American National Standard ANSI A 21.8 (AWWA C 108) for Cast-Iron Pipe centrifugally cast in Sand-lined Molds, for water and other liquids with push-on, mechanical and/or bell-and spigot joints.
5. American National Standard ANSI A 21.10 (AWWA C 111) for Gray-Iron and Ductile - Iron Fittings, 2 inches through 48 inches, for water and other liquids with mechanical, push-on, bell-and-spigot and flanged joints.
6. American National Standard ANSI A 21.11 (AWWA C 111) for Rubber Gasket Joints for Cast-Iron and Ductile-Iron Pressure Pipe and Fittings for push-on and mechanical joints.
7. American National Standard ANSI A 21.51 (AWWA C 151) for Ductile-Iron Pipe centrifugally cast in Metal Molds or Sand-lined molds for water or other liquids with push-on and mechanical joints.
8. Federal Specifications WW-P-421 c for pipe, Cast Iron and Ductile iron, pressure (for water and other liquids).
9. CIPRA Standard for Flanged Pipe with threaded flanges.
10. CIPRA - Special type of pipe and fittings.

POLY (VINYL CHLORIDE) PLASTIC PIPE

Poly (Vinyl Chloride) plastic pipe and fittings shall conform to the following standards:

1. ASTM Standard Specification for Poly (Vinyl Chloride) (PVC) and Chlorinated Poly (Vinyl Chloride) (CPVC) Plastic Pipe Schedules 40, 80 and 120 for Water and Force Mains, Designation D 1785
2. ASTM Standard Specification for Socket-Type Poly (Vinyl Chloride) (PVC) and Chlorinated Poly (Vinyl Chloride) (CPVC) Plastic Pipe Fittings, Schedule 40, Designation D 2466.

3. ASTM Standard Specification for Socket-Type Poly (Vinyl Chloride) (PVC) and Chlorinated Poly (Vinyl Chloride) (CPVC) Plastic Pipe Fittings, Schedule 80, Designation D 2467.
4. ASTM Specification for Poly (Vinyl Chloride) (PVC) Sewer Pipe Fittings, Designation D 2729.
5. ASTM Standard Specification for Filled Poly (Vinyl Chloride) (PVC) Sewer Pipe, Designation D 2836.
6. ASTM Standard Specification for Type PSP Poly (Vinyl Chloride) (PVC) Sewer Pipe and Fittings, Designation D 3033.
7. ASTM Standard Specification for Type PSM Poly (Vinyl Chloride) (PVC) Sewer Pipe and Fittings for Gravity Sewers.

PRECAST REINFORCED CONCRETE PIPE

Pre-cast, reinforced concrete pipe and fittings for sanitary sewers shall be epoxy coated. The pipe shall conform to the requirements of ASTM Standard Specifications for Reinforced Concrete Culvert. Storm Drain and Sewer, Designation C 76 and to ASTM Standard Specification for Reinforced Concrete D-Load Culvert, Storm Drain and Sewer Pipe, Designation C 655.

The epoxy coating shall conform to the specifications listed herewith.

Class and Wall Designations will be shown on the plans.

The groove of all tongue-and-groove pipes and the bell of all bell-and-spigot pipes shall contain circumferential reinforcement equal in area to that of a single line within the barrel of the pipe. Reinforcement for bell-and-spigot pipe, 12 to 24 inches in diameter, shall be extended into the bell.

The interior of pre-cast, reinforced concrete pipe for sanitary sewers shall be coated with two (2) coats of a green epoxy resin, specified as follows.

Internal coating of each piece of concrete sewer pipe shall be performed at the plant and under the control of the concrete pipe manufacturer in accordance with these specifications. A rigid inspection shall be maintained by the manufacturer of each length of pipe to determine that a thorough coating has been applied. If any portion of the coating is found to be thin or holidays are found, a second coat shall be applied to the deficient area. If bond between the pipe and coating is inadequate, the coating shall be thoroughly removed and a new application properly made.

PREPARATION OF PIPE

At the time the protective inner coating is applied, the pipe shall have a high, uniformly distributed moisture content (essentially saturated and surface damp) but shall be free of glistening or dripping water. The pipe may be prepared to meet this condition by one of the following methods:

1. For Pipe to be Prepared after Initial Kiln Curing.

   Pipe, after initial kiln curing and removal of forms, shall be placed in an enclosure and shall be subjected to an atmosphere of approximately 100% relative humidity at a temperature of not less than 90 degrees F. for a period of not less than 12 hours.

2. For Pipe from Yard Storage.

   Pipe from yard storage shall be placed in an enclosure and shall be subjected to an atmosphere of approximately 100% relative humidity at a temperature of not less than 90 degrees F. for a period of not less than 12 hours.

   Dust, weak laitance, rich cement films not firmly bonded, irregular aggregate protuberances, and other objectionable conditions shall be removed from the inner surface of the pipe to a depth sufficient to assure firm bond of crating. This shall be accomplished by mechanical grinding or other approved method, followed by a strong air blast, wire brushing and/or generous water flushing to remove all detritus. This inner surface preparation may precede or follow the moisture conditioning of the pipe herein before described.

COATING APPLICATION

After the pipe has been properly prepared as specified, the pipe shall be coated immediately before any appreciable loss of moisture by evaporation takes place and before a significant change in color of the pipe takes place due to drying.

The coating shall be catalytic - setting modified type epoxy coating consisting of two approximately equal volume components of type J-151-75 as manufactured by the George W. Whitesides Company, Inc. Louisville, Kentucky or approved equal. The coating shall be distinctively pigmented to aid in inspection. Application must be made in full compliance with instructions of the manufacturer. The coating shall be applied as a uniform with no holidays or thin spots. Application shall be at a rate to produce a cured film thickness of not less than 5 mils, and shall be made by suitable proportioning in temperature-controlled spray equipment, in which intimate mixing is done in the nozzle. Alternate application at the same rate may be made by approved hand methods, but in this case, no more epoxy material than is necessary to coat one pipe shall be attained by mechanical stirring.

In addition to coating the entire internal surface of the pipe, the inside groove (bell) and the extreme end of the tongue or spigot face shall also be coated.

MISCELLANEOUS CONTROLS

Temperature of concrete shall be 60 degrees F. to 90 degrees F. at the time of coating application. The pipe, after coating, shall be promptly stored and protected at an initial curing temperature of 60 degrees F. to 90 degrees F. until the film attains set-hardness before stockpiling, shipping, etc. Forced curing, at temperatures not to exceed 115 degrees F. will be permitted.

Any damage or discontinuities in the coating film prior to installation may be repaired by spot brush application of the same material used in the original coating. The proper timing of spot application in relation to original application of coating shall be determined from the manufacturer of the epoxy material and shall be rigidly adhered to in order to prevent lamination at overlaps of coats.

Sealing materials shall conform to the following requirements:

Rubber gaskets for joints shall conform to the requirements of ASTM Standard Specification for circular concrete sewer and culvert for pipe, using rubber gaskets, Designation C 443 and shall be flexible and able to withstand expansion, contraction, and settlement.

Resilient joint materials shall consist of poly vinyl chloride, or fiberglass impregnated with epoxy resin, or other approved resilient joint materials.

Joint material for reinforced concrete sanitary sewer pipe shall be the rubber gasketed type.

LAYING AND JOINTING PIPE

Before being laid each pipe length shall be inspected and tested to verify that it is not cracked, permanently dented or deformed. Pipe of the required size shall be laid to conform to the lines and grades indicated on the drawings or given by the Contracting Officer. Each pipe shall be so laid as to form a close joint with the next adjoining pipe and bring the inverts continuously to required grade. Each pipe shall be supported with compacted crushed stone, graded in size from 1/4 inch to 3/4 inch, to obtain a substantially unyielding bed.

Unless recommended by the ASTM standards and by the manufacturers of the various kinds and types of pipe, the Contractor shall not joint pairs of pipe before laying them.

The factory instructions for unloading, handling, and laying and jointing the various kinds and types of pipes and fittings shall be followed explicitly and shall also follow the standards below, providing that the listed standards do not conflict with the manufacturer's recommendations:

1. ASTM Standard Recommended Practice for Installing Vitrified Clay Pipe Sewers, Designation C 12.
2. ASTM Standard Specifications for Rubber Rings for Asbestos Cement Pipe, Designation D 1869.
3. AWWA Standard for Installation of Cast Iron Water Mains C 600.
4. ASTM Standard Specifications for the Underground Installation of Flexible Thermoplastic Sewer Pipe, Designation D 2321.
5. ASTM Standard Specifications for Butt Fusion of Polyethylene (PE) Plastic Pipe Fittings, Schedule 40, Designation D 2610.
6. ASTM Standard Specifications for Butt Fusion of Polyethylene (PE) Plastic Pipe Fittings, Schedule 80, Designation D 2611.
7. ASTM Recommended Practice for the Underground Installation of Thermoplastic Pressure Piping, Designation D 2774.
8. ASTM Standard Specifications for Plastic Pressure Pipe using Flexible Elastomeric Seals, Designation D 3139.

9. Tentative Specifications for Joints for Drain and Sewer Plastic Pipe using Flexible Elastomeric Seal, Designation D 3212-73T.
10. Standard Specifications for Butt Heat Fusion of Polyethylene (PE) Plastic Pipe and Tubing, Designation D 3261.

Where a concrete cradle is used, the pipe shall be laid on concrete saddles so constructed as to provide lateral support for the pipe while the cradle is being placed. The location, dimensions, and class concrete required for cradles are given on the drawings.

Branches and fittings shall be laid by the Contractor as and where directed. Open ends of pipe and branches shall be closed with the appropriate stoppers and/or plugs secured in place in an acceptable manner using an approved gasket for the stopper and/or plug. No walking on or working over the pipes after they are laid, except when necessary in tamping the earth and backfilling, will be permitted until they are covered with earth to a depth of one (1) foot. All openings to the pipe line shall be satisfactorily protected from the entrance of earth, water, or other material, and all necessary precautions shall be taken to prevent flotation of the pipe.

LEAKAGE

The sewers and appurtenant structures connected thereto shall be made as nearly watertight as practicable and leakage measurements shall be made wherever possible.

The leakage into the sewers, including manholes, constructed under contract shall not exceed an average of 500 gallons per twenty-four (24) hour per inch-diameter per mile of sewer pipeline. There shall be no gushing or spurting streams entering the sewer or manholes.

Where practicable, the leakage tests shall be made at a time when a head of water can be maintained at least one (1) foot above the top of the pipe of the highest section of work being tested.

The sewers will be tested before any building connections are made.

The Contractor shall construct such weirs or other means or measurement as may be required and shall do all necessary pumping to enable the tests to be properly made.

Testing will be required.

SPECIFICATION FOR FLEXIBLE WATERTIGHT PIPE-TO-PIPE TEE CONNECTORS

A flexible watertight pipe-to-pipe connector shall be employed when connecting laterals into trunk and other sanitary sewer pipelines.

The connector shall be Kor-N-Tee as manufactured by NPC Systems, Inc., Milford N.H. or approved equal.

The connector shall be the sole element relied on to assure a flexible watertight seal at the location where the two (2) pipes are connected. No adhesives or lubricants shall be employed in the installation of the connector. The rubber for the connector shall comply with ASTM C 443, be of molded one-piece construction, shall be 3/8" (9.4 mm) thick or greater and consist of EPDM and Neopreneor elastomers designed to be resistant to ozone, weather elements, chemicals including acids, alkalis, animal and vegetable fats, oils and petroleum products from spills.

The connector shall be installed in the wall of the pipe by activating the expanding mechanism in strict accordance with the recommendation of the connector manufacturer.

All stainless steel elements of the connector shall be totally non-magnetic Series 304 stainless including the worm screw assembly for tightening the steel band around the pipe. The worm screw for tightening the stainless steel band shall be torqued by a break-away torque wrench available from the pre-cast manhole supplies, and set for 60-70 inch/lbs.

The connector shall be a size specifically designed so as not to protrude more than 1/8" inside the pipe. The connector shall also contain an internal shoulder that shall act as a stop for the incoming lateral.

Actual laboratory test results show that our material meets the requirements given in ASTM Specification C923, which covers rubber seals used in concrete sewer pipe and culvert joints.

PHYSICAL PROPERTIES	ASTM C-923	ACTUAL
I. Original		
Tensile, psi., min.	1200	1550
Elongation, % min.	350%	910
Shore A. Durometer	35-65	40
II. Comp. Set, % max.	19.6	25
III. Oven Aging: 96 hrs. @ 158 degrees F.		
Tensile Change, % max.	-15	10.40%
Elongation Change, % max.	-20	-14.00%
IV. Water Absorption: 48 hrs. @ 158 degrees F.		
Weight increase, % max.	10	3.50%
V. Ozone Resistance		
120 hrs. @ 100 degrees (+-) 02 degrees F.	0	0

TESTING

1. GENERAL REQUIREMENTS

All sanitary and surface sewer lines shall be subject to the applicable tests described in this section and also subject to CCTV work as described under Item 210. The contractor shall furnish all materials, equipment, gauges, pumps, special temporary tappings in line and water or other things required for making the tests. He shall include in his price for furnishing and laying pipe an allowance for the costs of such tests. The pipes installed under this contract will be tested as specified by the contracting officer and according to the contract documents.

2. TELEVISION INSPECTION

On all City of Worcester pipe installation projects, including sanitary and surface sewer lines, new or replacement projects, the contractor will adhere to the work specified in Item 210.

3. PIPE DEFLECTION MEASUREMENT

In accordance with ASTM D3034, no less than 30 days after completion of the PVC sewer pipe installation, the contractor shall test the pipeline for deflection using a “go/no-go” deflection mandrel having a minimum of nine evenly spaced arms or prongs. The “go/no-go” gauge shall be hand pulled through all sections of the pipeline by the contractor. The contractor shall submit drawings of the “go/no-go” gauge to the engineer for approval prior to testing. Complete dimensions of the gauge for each diameter of pipe to be tested shall be in accordance with ASTM D3034.

Any section of pipe found to exceed 7.5 percent deflection shall be deemed a failed pipe and shall be excavated and replaced by the contractor at his own expense.

4. LOW PRESSURE AIR TESTING

Unless otherwise approved, the section shall be tested using low-pressure air test procedures. If circumstances permit; the Engineer may allow testing in infiltration or exfiltration in lieu of air testing.

The air test procedures shall conform to the Uni-Bell Recommended Practice for Low pressure Air Testing of Installed Sewer Pipe, UNI-B-6. The starting air pressure for the test shall be 4 psi. The minimum duration permitted for the prescribed low pressure air exfiltration pressure drop between two consecutive manholes shall not be less than provided in Table I or Table II of UNI-B-6. The two tables are reproduced on the following pages:

TABLE 1

SPECIFICATION TIME REQUIRED FOR A 1.0 PSIG PRESSUER DROP
FOR SIZE AND LENGTH OF PIPE INDICATED FOR Q=0.0015

PIPE DIAMETER (INCHES)	MINIMUM TIME (MIN:SEC)	LENGTH FOR MINIMUM TIME (FT)	LENGHT FOR LONGER LENGTH (SEC)	100 FEET	150 FEET	200 FEET	250 FEET	300 FEET	350 FEET	400 FEET	450 FEET
4	3:46	597	0.380L	3:46	3:46	3:46	3:46	3:46	3:46	3:46	3:46
6	5:40	398	0.854L	5:40	5:40	5:40	5:40	5:40	5:40	5:42	6:24
8	7:34	298	1.52L	7:34	7:34	7:34	7:34	7:36	8:52	10:08	11:24
10	9:26	239	2.374L	9:26	9:26	9:26	9:53	11:52	13:51	15.49	17.48
12	11:20	199	3.418L	11:20	11:20	11:24	14:15	17:05	19:56	22.47	25.38
15	14:10	159	5.342L	14:10	14:10	17:48	22:15	26:42	31:09	31:09	35:36
18	17:00	133	7.692L	17:00	19:13	25:38	32:03	38:27	44:52	51:16	57:41
21	19:50	114	10.470L	19:50	26:10	34:54	43:37	52:21	61:00	69:48	78:31
24	22:40	99	13.673L	22:47	34:11	45:34	56:58	68:22	79.46	91:10	102:33
27	25:30	88	17.306L	28:51	43:16	57:41	72:07	86:32	100:57	115:22	129:48
30	28:20	80	21.366L	35:37	53:25	71:13	89:02	106:50	124:38	142:26	160:15
33	31:10	72	25.852L	43:05	64:38	86:10	107:43	129:16	150:43	172.21	193:53
36	34:00	66	30.768L	51:17	76:55	102:34	128:12	153:50	179.29	205:07	230:46

SEPTEMBER 25, 2009		DEPARTMENT OF PUBLIC WORKS AND PARKS Engineering Division 20 East Worcester St, Worcester MA 01604					
TABLE 1							
NOT TO SCALE							
SHEET 1 OF 1			NO.	DATE	DESCRIPTION	BY	

TABLE 2

SPECIFICATION TIME REQUIRED FOR A 0.5 PSIG PRESSUER DROP
FOR SIZE AND LENGTH OF PIPE INDICATED FOR Q=0.0015

PIPE DIAMETER (INCHES)	MINIMUM TIME (MIN:SEC)	LENGTH FOR MINIMUM TIME (FT)	LENGHT FOR LONGER LENGTH (SEC)	100 FEET	150 FEET	200 FEET	250 FEET	300 FEET	350 FEET	400 FEET	450 FEET
4	1:53	597	0.190L	1:53	1:53	1:53	1:53	1:53	1:53	1:53	1:53
6	2:50	398	0.427L	2:50	2:50	2:50	2:50	2:50	2:50	2:51	3:12
8	3:47	298	0.760L	3:47	3:47	3:47	3:47	3:48	4:26	5:04	5:42
10	4:43	239	1.187L	4:43	4:43	4:43	4:57	5:56	6:55	7:54	8:54
12	5:40	199	1.709L	5:40	5:40	5:42	7:08	8:33	9:58	11:24	12:50
15	7:05	159	2.671L	7:05	7:05	8:54	11:08	13:21	15:35	17:48	20:02
18	8:30	133	3.846L	8:30	9:37	12:49	16:01	19:14	26:26	25:38	28:51
21	9:55	114	5.235L	9:55	13.00	17:27	21:49	26:11	30:32	34:54	39:16
24	11:20	99	6.837L	11:24	17.57	22:48	28:30	34:11	39:53	45:35	51:17
27	12:45	88	8.653L	14:25	21:38	28:51	36:04	43:16	50:30	57:42	46:54
30	14:10	80	10.683L	17:48	38:28	35:37	44:31	53:25	62:19	71:13	80:07
33	15:35	72	12.926L	21:33	64:38	43:56	53:25	64:28	75:24	86:10	96:57
36	17:00	66	15.384L	25:39	76:55	51:17	64:06	76:55	89.44	102:34	115:23

SEPTEMBER 25, 2009		DEPARTMENT OF PUBLIC WORKS AND PARKS Engineering Division 20 East Worcester St, Worcester MA 01604				
TABLE 2						
NOT TO SCALE						
SHEET 1 OF 1			NO.	DATE	DESCRIPTION	BY

If either infiltration or exfiltration is permitted by the Contracting Officer, the test shall be conducted for at least 24 hours. The amount of infiltration or exfiltration shall not exceed 100 gallons per inch-diameter per mile of sewer per 24 hours.

The infiltration test measures leakage into a section of sewer and may be used only where the groundwater level is one foot or more above the crown of the section of sewer pipe at its upper end and at least one foot above the top of building connections and chimneys. For making the infiltration tests, under drains, if used, shall be plugged and other groundwater drainage shall be stopped to permit the groundwater to return to its normal level insofar as practicable. Allowances shall be made for water, which may enter the sewer through pipe connections and inlets during the infiltration test.

Where the groundwater level is less than 1 foot above the top of the pipe at its upper end, the exfiltration test may be used. The sewers shall be subjected to an internal pressure by plugging the pipe at the lower end and then filling the pipelines and manholes with clean water to a height of 2 feet above the highest point in the system to be tested, including main pipeline, service connections and chimneys.

When slopes between manholes are steep, the contractor shall insure that this test can be accomplished without danger of forcing stoppers from wyes or tee branches.

The rate of exfiltration from the sewers shall be determined by measuring the amount of water required to maintain the water level at the elevation established at the beginning of the test.

The contractor shall construct such weirs or other means of measurements as may be required, shall furnish water and shall do all necessary pumping to enable the test to be properly made.

The contractor shall be responsible for the satisfactory water tightness of the entire section of sewer. Should the sections under test fail to meet the requirements, the contractor shall do all work of locating and repairing leaks and retesting as the Contracting Officer may require without additional compensation. A plan of the method of repairing any leaks that are found shall be submitted to the Engineer for review.

Portions of sewers that fail to meet tests shall be repaired and retested as necessary until test requirements are compiled. All said tapes/dvd's shall be submitted to the Contracting Officer.

C. *SURFACE SEWERS*

GENERAL

Under this item, the Contractor shall furnish all labor, tools, equipment, pipe, fittings, stoppers and/or plugs, jointing materials and screened gravel required to handle, lay and joint pipe for surface sewers (storm drains), including tee connections, Y-branches, and pipe for chimneys. Where applicable the connector shall be Kor-N-Tee as manufactured by NPC Systems, Inc., N.H. or equal.

MATERIALS

The kinds of pipe and fittings to be used for surface sewers shall be specified in the contract and they shall be made of (1) pre-cast, reinforced concrete and (2) cast and ductile iron. Each make of pipe and fittings shall meet the standards specified herein. Other kinds of pipe and fittings may be used for surface sewers and will be designated under appropriate items in the specifications and proposal. Where specific standards are referred to in the specifications, it is understood and agreed that they shall include all the revisions and amendments thereto. The class and type of each kind of pipe and fittings shall be shown on the plans.

PRE-CAST, REINFORCED CONCRETE PIPE

Pre-cast, reinforced concrete pipe for surface sewers shall conform to the requirements of ASTM Standard Specifications for Reinforced Concrete Culvert, Storm Drains and Sewer Pipe, Designation C 76 and to ASTM Standard Specifications for Reinforced Concrete D-Load Culvert, Storm Drain, and Sewer Pipe, Designation C 655.

CAST AND DUCTILE IRON

Cast and ductile iron pipe for surface sewers shall be the same as for cast and ductile iron pipe for sanitary sewers.

LAYING AND JOINTING PIPE (See Item 220-223, subsection entitled "LAYING & JOINTING PIPE")

Same as for sanitary sewers.

LEAKAGE (See Item 220-223, subsection entitled "LEAKAGE")

Same as for sanitary sewers.

SPECIFICATION FOR FLEXIBLE WATERTIGHT PIPE-TO-PIPE TEE CONNECTORS

Same as for sanitary sewers.

TESTING

Same as for sanitary sewers.

D. ***MEASUREMENT AND PAYMENT***

The unit prices for Items 220 - 223 shall include compensation for trench excavation and backfill, furnishing, handling, laying and jointing the pipe and fittings, including setting stoppers and/or plugs and connecting to existing stubs and/or stoppers where required, furnishing gaskets, jointing material, crushed stone, all required testing, and all work incidental thereto.

Payment for trench excavation, backfill and sewer pipe under Items 220 - 223 shall be based upon measurements projected on a horizontal scale of the completed pipelines taken along their center lines, including Y or T branches. The length of manhole inverts (as measured between inside walls of the manholes) will be deducted from said measurements.

The cost of excavation and backfill, furnishing and handling, laying and jointing the various sized pipe for connections shall be paid for under Item 224 in the proposal.

Payment for trench rock excavation and disposal shall be made under Item 121.

Payment for trench excavation and backfill, furnish and install pipe shall be paid for by the linear foot.

ITEM 224 CONNECTIONS

A. ***GENERAL***

Where indicated on the drawings or directed by the Contracting Officer, the Contractor shall furnish, handle, lay and joint 6-inch or larger sized ductile iron pipe and stoppers; 6-inch or larger sized PVC pipe and plugs for existing or future house or building connections.

B. ***MEASUREMENT AND PAYMENT***

Payment for connections under this item shall be by the linear foot, and based upon measurements of completed connections taken along their centerlines. The unit price for this item shall include compensation for furnishing, handling, laying and jointing the pipe and plugs. The unit price shall also include furnishing rubber rings and lubricants for the various kinds of pipe, crushed stone envelope and making all excavations required for the connections above that are normally required under items and all work incidental thereto.

ITEM 225.08 8 INCH CATCH BASIN CONNECTION

ITEM 225.12 12 INCH CATCH BASIN CONNECTION

A. ***GENERAL***

Under these items the Contractor shall furnish and install the 8 inch or 12 inch DR18, Class 150 pipe complete in place, including excavation and gravel backfill and make connections to the new or existing manholes or catch basins. Gravel to be power tamped in 6-inch layers as directed by the Contracting Officer.

B. ***MEASUREMENT AND PAYMENT***

This item shall be paid for by the sum bid per linear foot.

LOW PRESSURE FORCE MAIN

ITEM 226.015 TRENCH EXCAVATION & BACKFILL, FURNISH AND INSTALL1.5” PVC FORCE MAIN

ITEM 226.02 TRENCH EXCAVATION & BACKFILL, FURNISH AND INSTALL 2” PVC FORCE MAIN

A. ***GENERAL***

Polyvinyl Chloride (PVC) pipe for low-pressure sewers shall be of the size indicated on the Drawings and shall be PVC, Type 1120, ASTM 2241, Class 200 (DR-21). Joints shall use elastomeric gaskets conforming to ASTM D1869.

The standard laying length shall not exceed 20 feet. All pipe and fittings shall be clearly marked on the outside indicating the name of the manufacturer, ASTM designation and the nominal diameter. PVC pipe shall be laid

in a 6” envelope of sand borrow at a minimum depth of 5 feet. Sand Borrow shall conform to Item #125 of these specifications.

Sewer Warning Tape shall be required with all force main installations. The magnetic tape shall be a minimum of 6” in width, green in color and shall be placed 1 foot above the pipes bedding. Installation of the sewer warning tape shall be a subsidiary obligation of the contractor at no additional cost to the City of Worcester.

Service connections to the low-pressure sewer shall use tees. Tees shall be of the same class and size as a mainline pipe for the location to be installed and shall have a branch of 1-1/4” in size. The run of the tee shall use elastomeric joints. A Corporation Stop placed at the tee or saddle, suitable for withstanding line test pressure shall be supplied and installed.

B. *PRESSURE AND LEAKAGE TESTS*

Unless otherwise approved, all pipelines shall be given combined pressure and leakage tests between line valves. The Contractor shall furnish and install suitable temporary testing plugs or caps; all necessary pressure pumps, pipe connections, meters, gates, and other necessary equipment; and all labor required.

Test the service lateral by disconnecting the hose and valve assembly at the union, filling lateral with water, and using positive displacement pump to raise the pressure to 100 psi for one (1) hour. No loss of pressure will be permitted. The Owner and Engineer shall have the privilege of using their own gages. Subject to approval and provided that the tests are made within a reasonable time considering the progress of the project as a whole, and the need to put the section into service, the Contractor may make the tests when he desires. However, pipelines in excavations or embedded in concrete shall be tested prior to backfilling of the excavation or placing of the concrete, and exposed piping shall be tested prior to field painting.

Unless it has already been done, the section of pipe to be tested shall be filled with water and all air shall be expelled from the pipe. The Contractor shall follow established procedures for filling the pipe and expelling trapped air to avoid exposing the piping system to water hammer. If blowoffs are not available at high points for releasing air, the Contractor shall make the necessary excavations and install the necessary taps. If directed, he shall plug the holes after completion of the test and backfill as necessary.

The section under this test shall be maintained full of water for a period of 24 hours prior to the combined pressure and leakage test being applied.

The pressure test shall consist of first raising the water pressure (based on the elevation of the lowest point of the section under the test corrected to the gage location) to the pressure rating of the pipe. If the Contractor cannot achieve the specified pressure and maintain it for a period of one (1) hour, the section shall be considered as having failed to pass the pressure test.

If the pressure test fails, the Contractor shall make a leakage test by metering the flow of water into the pipe while maintaining the specified pressure in the section being tested. If the average leakage during a two-hour period exceeds 11.6 gallons per day, per inch of diameter, per mile of pipe, the section shall be considered as having failed the leakage test. For example, if 1,000 feet of 4-inch pipe is to be tested, the allowed leakage is 0.73 gallons over a two (2) hour period as calculated as follows:

$$L = \frac{(11.6 \text{ Gallons})\,(4'')\,(2 \text{ Hr.})\,(1{,}000')}{(1'')\,(24 \text{ Hr.})\,(5{,}280')} = 0.73$$

If the section fails to pass the pressure and leakage test, the Contractor shall do everything necessary to locate, uncover, and repair or replace the defective pipe, fitting, or joint, all at his own expense and without extension of time for completion of the work. Additional tests and repairs shall be made until the section passes the specified test.

Pressure and leakage tests shall be a subsidiary obligation of the Contractor at no additional cost to the City.

C. *MEASUREMENT AND PAYMENT*

The unit prices for Item 226.015 and 226.02 shall include compensation for trench excavation and backfill, furnishing, handling, laying and jointing the pipe and fittings. This will include setting stoppers and/or plugs and connecting to existing stubs and/or stoppers where required. It shall also include furnishing gaskets, jointing material, sand borrow, making leakage tests and all work incidental thereto.

Payment for trench excavation, backfill and sewer pump under Item 226.015 and 226.02 shall be based upon measurements projected on a horizontal scale of the completed pipelines taken along their centerlines, including Y or T branches.

The cost of excavation and backfill, furnishing and handling, laying and jointing the various sized pipe for connections shall be paid for under Item 227.125 in the proposal.

Payment for trench rock excavation and disposal shall be made under Item 121.

Payment for trench excavation and backfill, furnish and install pipe shall be paid for by the linear foot.

ITEM 227 SERVICE CURB STOP AND ROD BOX FOR LOW PRESSURE SEWER FORCE MAINS

A. *GENERAL*

A curb stop valve shall be installed on each sewer lateral. The curb stop shall be a 1-1/4" brass ball-type with full port, pack joint (compression). Valves shall be Ford Meter Box Company or approved equal. Curb stops shall NOT be of the stop/waste type.

The curb stop service box shall be rod type. Quality Water Products or equal. The service box shall adjust one (1) foot for proper height. The bottom shall be arch pattern with the use of a curb box base that fits over a 1-1/4" curb stop. The 36-inch rod shall be offset for centering in the pipe and must be a minimum 5/8" diameter. A brass cotter pin must be supplied with each rod. The rod shall be permanently attached to the end yoke. The plug cover shall have a deep slot for the release of water and the removal of debris. The brass pentagon plug shall have a coarse thread. All boxes will be coated with asphalt-based paint and shall be labeled "Sewer" on the lid.

As a general rule, a curb stop and box shall be installed within the City right-of-way at or near the property line behind the sidewalk, usually in the grass area. Curb stops and boxes shall not be location within the sidewalk unless directed by the Contracting Officer because of special or unique conditions.

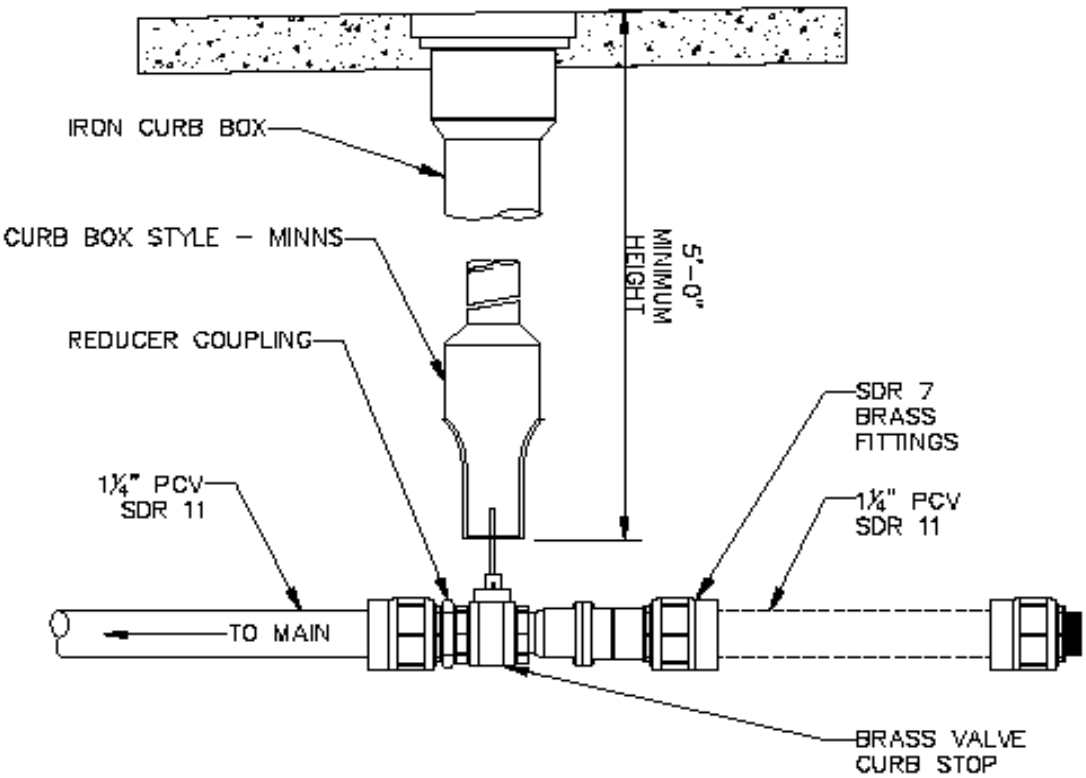

SERVICE CURB STOP & BOX

SEPTEMBER 25, 2009		DEPARTMENT OF PUBLIC WORKS AND PARKS Engineering Division 20 East Worcester St, Worcester MA 01604				
SERVICE CURB STOP & BOX						
NOT TO SCALE						
SHEET 1 OF 1			NO.	DATE	DESCRIPTION	BY

B. ***MEASUREMENT AND PAYMENT***

Curb stop and rod box for force sewer services will be paid for per each complete in place.

ITEM 227.125 LOW PRESSURE SEWER LATERAL HOUSE CONNECTIONS AND VALVES

A. ***GENERAL***

Low-pressure sewer connections from each sewage grinder pump station shall be PVC Type 11,

ASTM 2241, Class 200 (DR 21). Joints shall use elastomeric gaskets conforming to ASTM D1869.

All pipe and fittings shall be clearly marked on the outside indicating the name of the manufacturer, ASTM designation and the nominal diameter.

Service connections to the low-pressure sewer shall use “tees”. Tees shall be of the same class and size as the mainline pipe for the location to be installed and shall have a branch of 1-1/4” in size. The run of the tee shall use elastomeric joints.

Forced sewer house lateral lines are to be installed at a minimum of five (5) feet of cover and a maximum of eight (8) feet from the pipe to the finished grade.

Forced sewer lines shall be installed a minimum of ten (10) feet away from any potable water service.

B. ***MEASUREMENT AND PAYMENT***

Low-pressure service connections shall be paid for by the linear foot complete in place. This unit price shall include trench excavation and backfill, furnishing, handling, laying and joining the pipes and fittings. It shall also include furnishing gaskets, joining material, sand borrow and making leakage tests and all work incidental thereto.

The work to be done under Items 230 and 232 shall include furnishing and installing complete manhole bases and sections including hauling, excavation, placement of structures, backfilling and all labor, equipment and incidentals necessary to complete the work. All pre-cast manhole bases and sections shall conform to ASTM Specifications C 478. Installation of pre-cast manholes shall be as shown on a plan titled Typical Manhole and Step Manhole.

ITEM 230.4 4' MANHOLE BASE

ITEM 230.5 5' MANHOLE BASE

ITEM 230.6 6' MANHOLE BASE

ITEM 230.7 7' MANHOLE BASE

ITEM 230.8 8' MANHOLE BASE

ITEM 231.4 4' MANHOLE SECTION

ITEM 231.5 5' MANHOLE SECTION

ITEM 231.6 6' MANHOLE SECTION

ITEM 231.7 7' MANHOLE SECTION

ITEM 231.8 8' MANHOLE SECTION

ITEM 232.1 MITER BEND MANHOLE TEE

ITEM 232.2 FLAT MANHOLE TEE

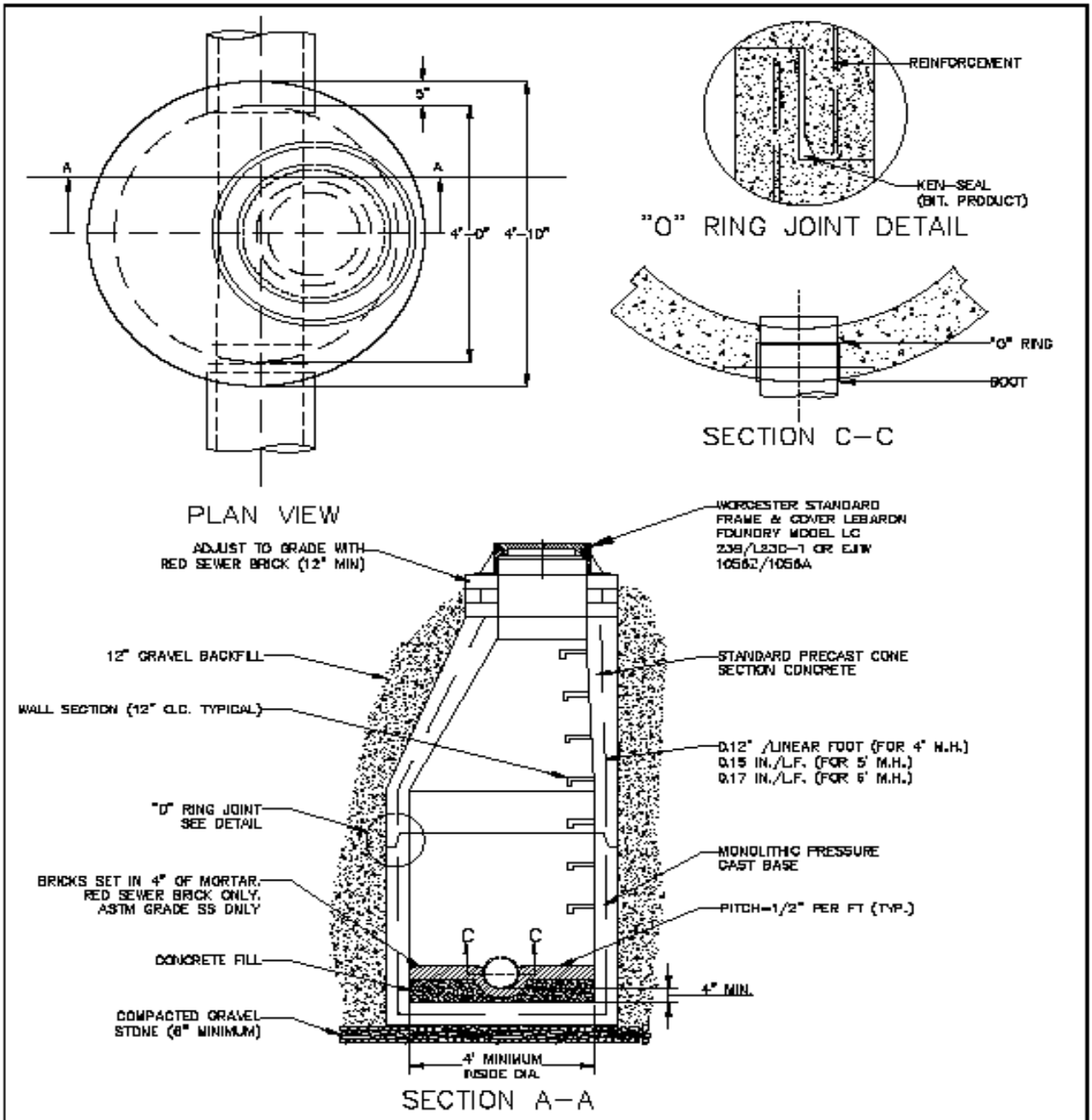
5"
A
A
4'-0"
4'-10"
PLAN VIEW
REINFORCEMENT
KEN-SEAL
(BIT. PRODUCT)
"O" RING JOINT DETAIL
"O" RING
BOOT
SECTION C-C
WORCESTER STANDARD
FRAME & COVER LEBARON
FOUNDRY MODEL LC
239/L230-1 OR EJIW
1056Z/1056A
ADJUST TO GRADE WITH
RED SEWER BRICK (12" MIN)
12" GRAVEL BACKFILL
WALL SECTION (12" C.C. TYPICAL)
"O" RING JOINT
SEE DETAIL
BRICKS SET IN 4" OF MORTAR,
RED SEWER BRICK ONLY,
ASTM GRADE SS ONLY
CONCRETE FILL
COMPACTED GRAVEL
STONE (8" MINIMUM)
STANDARD PRECAST CONE
SECTION CONCRETE
0.12" /LINEAR FOOT (FOR 4' M.H.)
0.15 IN./L.F. (FOR 5' M.H.)
0.17 IN./L.F. (FOR 6' M.H.)
MONOLITHIC PRESSURE
CAST BASE
PITCH=1/2" PER FT (TYP.)
C
C
4" MIN.
4' MINIMUM
INSIDE DIA.
SECTION A-A
TYPICAL MANHOLE
SEPTEMBER 25, 2009
TYPICAL MANHOLE
NOT TO SCALE
SHEET 1 OF 1
DEPARTMENT OF
PUBLIC WORKS AND PARKS
Engineering Division
20 East Worcester St, Worcester MA 01604
NO.
DATE
DESCRIPTION
BY

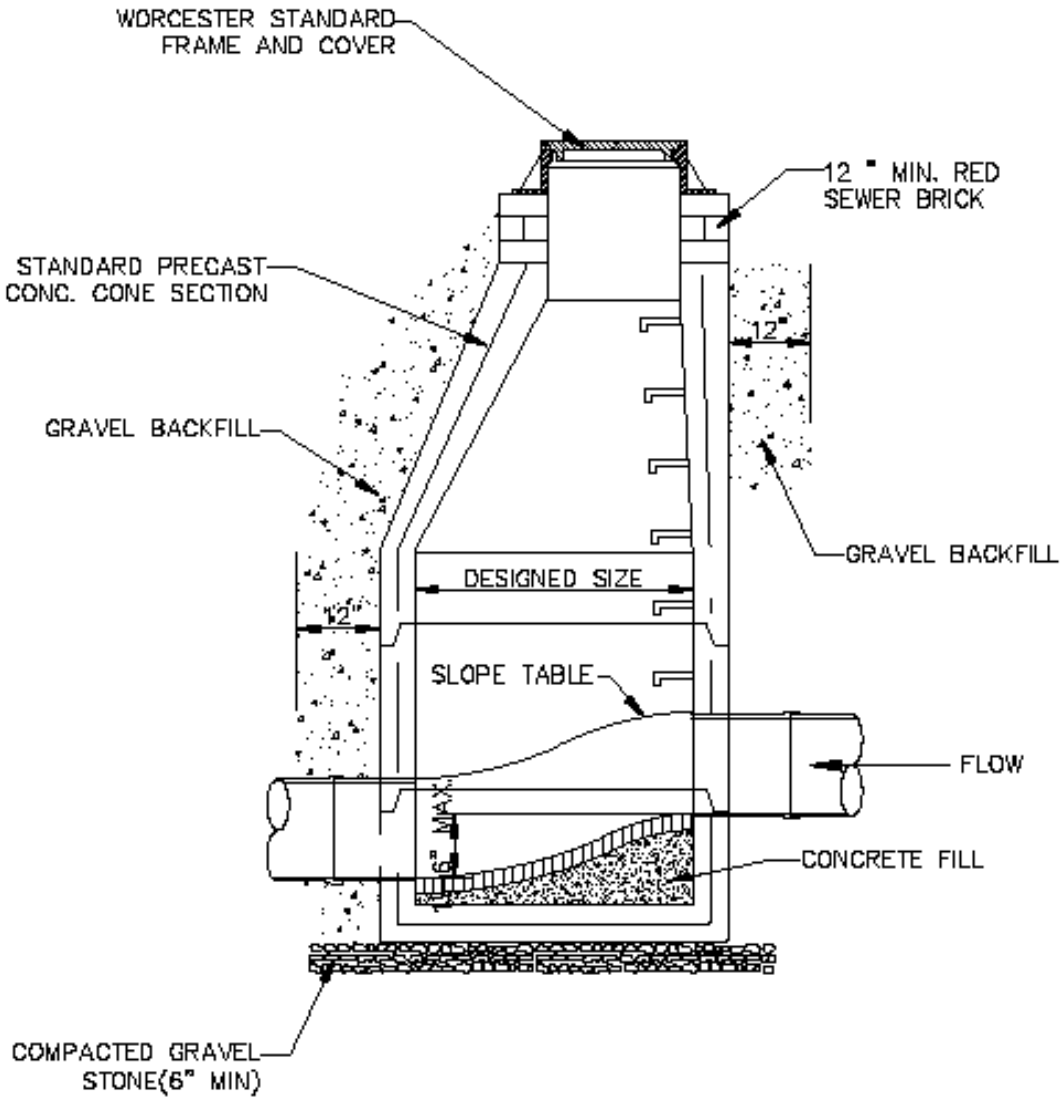

TYPICAL STEP MANHOLE

SEPTEMBER 25, 2009		DEPARTMENT OF PUBLIC WORKS AND PARKS Engineering Division 20 East Worcester St, Worcester MA 01604	NO. DATE DESCRIPTION BY
TYPICAL STEP MANHOLE			
NOT TO SCALE			
SHEET 1 OF 1			

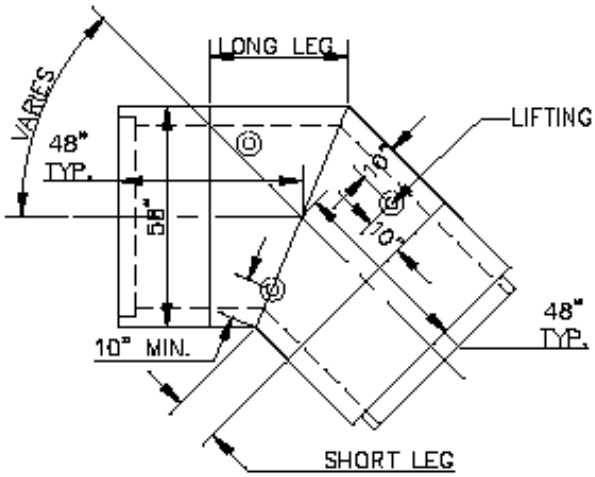

LONG LEG + SHORT LEG = 48" TYP.
LIFTING DEVICES IN PATTER OF 3 OR DEPENDING ON ANGLE.

PLAN

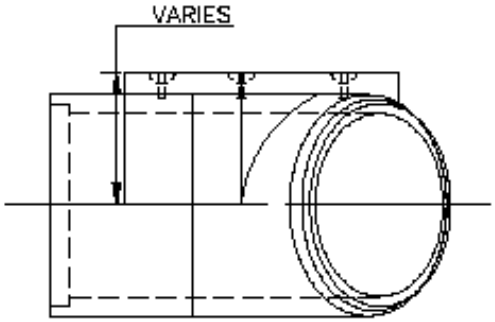

PROFILE

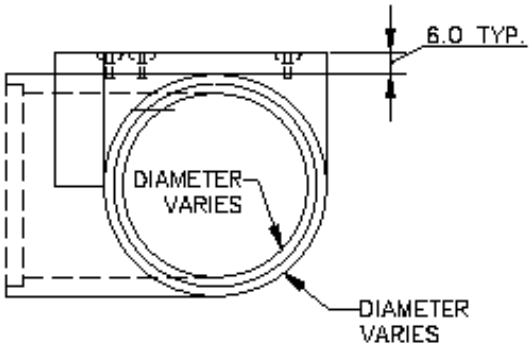

SPIGOT

NOTES:
1.) PIPE & CLASS SHALL BE IN ACCORDACE WITH ASTM C76.
2.) STEEL SHALL BE GRADE 60 STEEL PER ASTM A615.
3.) DESIGNED TO RESIST HS20-44 LIVE LOADS.
4.) THIS LAYOUT PROVIDED AS A GUIDE FOR DISTRIBUTION AND INSTALLATION. FIELD ADJUSTMENTS MUST BE MADE AS NECESSARY.
5.) DRAWINGS TO SCALE BASED ON 45DEGREE MITER BEND & 8' PIPE USING 4' LEGS.

PRECAST MITER BEND TEE WITH FLAT TOP

SEPTEMBER 25, 2009		DEPARTMENT OF PUBLIC WORKS AND PARKS Engineering Division 20 East Worcester St, Worcester MA 01604				
PRECAST MITER BEND WITH FLAT TOP						
NOT TO SCALE						
SHEET 1 OF 1			NO.	DATE	DESCRIPTION	BY

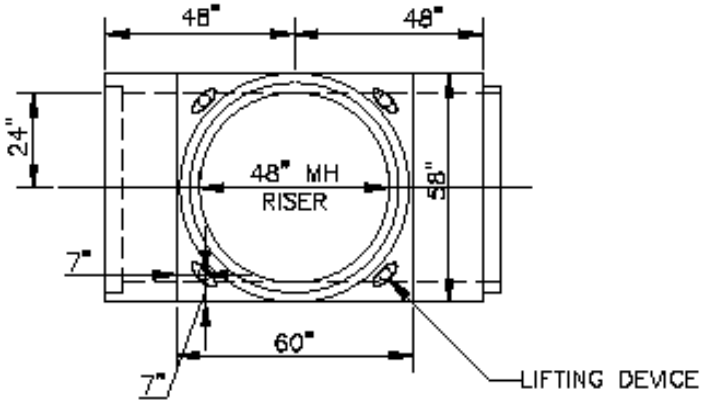

PLAN

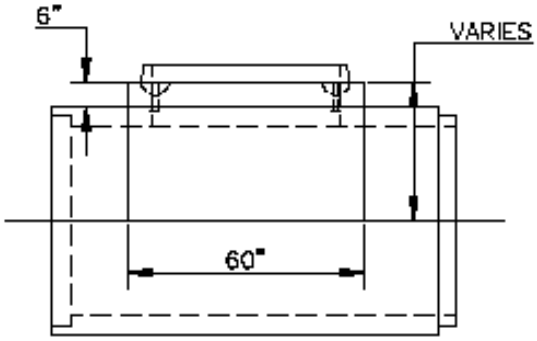

PROFILE

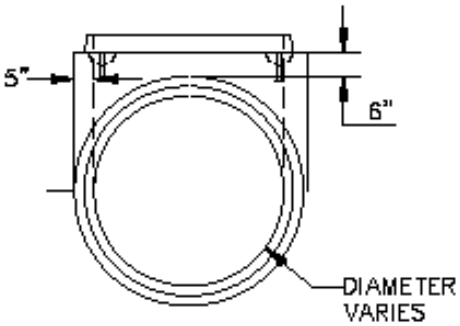

SPIGOT

NOTES:
1.) PIPE & CLASS SHALL BE IN ACCORDACE WITH ASTM C76.
2.) STEEL SHALL BE GRADE 60 STEEL PER ASTM A615.
3.) DESIGNED TO RESIST HS20-44 LIVE LOADS.
4.) THIS LAYOUT PROVIDED AS A GUIDE FOR DISTRIBUTION AND INSTALLATION. FIELD ADJUSTMENTS MUST BE MADE AS NECESSARY.
5. DRAWINGS TO SCALE BASED ON 45 DEGREE MITER BEND & 8' PIPE USING 4' LEGS.

PRECAST MANHOLE TEES WITH FLAT TOP

SEPTEMBER 25, 2009		DEPARTMENT OF PUBLIC WORKS AND PARKS Engineering Division 20 East Worcester St, Worcester MA 01604				
PRECAST MANHOLE TEES WITH FLAT TOP						
NOT TO SCALE						
SHEET 1 OF 1			NO.	DATE	DESCRIPTION	BY

MANHOLES

A. ***DESCRIPTION***

Manholes shall conform in shape, size, dimensions, and in other respects to the details indicated on the drawings, or as ordered by the Contracting Officer. Manholes shall be two types: (1) manholes built over existing sewer pipes and (2) pre-cast reinforced concrete manholes to be installed along with sanitary and surface sewers. A minimum of 12 inches of red sewer brick, grade MS only, shall be used under the frame.

1. The base of manholes built over existing sewer pipes shall be reinforced Class A concrete on screened gravel bed with sewer brick masonry built up to the spring line of the existing sewer pipe, as shown on the drawings or as directed by the Contracting Officer. The walls and cones of the manholes shall be pre-cast manhole sections as specified on (2) below. The joint between the manhole base and the first wall section shall be completely mortared by buttering the groove end of the wall section immediately prior to setting the section assuring a water tight joint. Type I cement is to be used. The remaining joints of the wall and cone sections of the manhole as well as the rubber gaskets for the pipe opening and riser sections and the aluminum manhole steps or approved equal shall be described in (2) below.

   The location of manhole bases to be built over existing sewers pipes shall be indicated on the drawings.

2. Pre-cast reinforced concrete manholes shall consist of pre-cast reinforced riser sections, a concentric or eccentric top and a base section conforming to the typical manhole details.

   Pre-cast manhole sections shall be manufactured in accordance with ASTM Standard Specifications for Pre-cast Reinforced Concrete Manhole Sections, Designation C 478. The minimum compressive strength of the concrete for 4-foot diameter and for 5-foot diameter manholes for all sections shall be 4,000 psi. The minimum compressive strength of the concrete for 6-foot diameter manholes for all sections shall be 5,000 psi. The circumferential steel reinforcement for riser pipe, cone sections and base walls for the various sized manholes shall be as required by ASTM Standard Specifications for Welded Steel Fabric for Concrete Reinforcement, Designation A 185 and shall be as follows:

   a. For 4-foot diameter manholes - An area of 0.12 square inch per vertical foot reinforcement in both bell and spigot.

   b. For 5-foot diameter manholes - An area of 0.12 square inch per vertical foot reinforcement for the 4-foot diameter portion and an area of 0.15 square inch per vertical foot reinforcement for the 5-foot diameter portion of the manhole in both bell and spigot.

   c. For 6-foot diameter manholes

   An area of 0.12 square inch per vertical foot reinforcement for the 4-foot diameter portion and an area of 0.17 square inch reinforcement of the 6-foot diameter portion of the manhole in both bell and spigot.

   d. For 7 & 8-foot diameter manholes

   See ASTM Specification C 478.

   Reinforcing in the bottoms of bases shall be of the same design as that required for the various sized manholes. Reinforcing shall extend into the tongue and groove of each manhole section.

   Manhole steps shall be epoxy coated steel ladder type (or approved equal). All steps shall be cast into walls of the pre-cast sections so as to form a continuous ladder with a distance of twelve (12") inches between steps.

   Each section of the pre-cast manhole shall have two holes for the purpose of handling and laying. These holes shall be tapered and shall be plugged with hydraulic cement after installation.

   Monolithicly pressure cast base sections shall be as shown on the drawings or as ordered by the Contracting Officer. Holes for pipes shall be cased in the base section so that there is a clear distance of four (4) inches minimum between the inside bottom of the base section and the pipe invert.

   The joint at the base section between the manhole and the pipe shall be (1) "A-Lok" Seal Joint as manufactured by L and L Concrete Products Incorporated, Webster, Massachusetts (or an approved equal).

   The "A-Lok" rubber gasket is a pipe to manhole seal cast integrally into the pipe opening of the manhole base to provide a water tight joint and 10 degree of omni directional deflection. The "A-Lok" rubber gasket is to be manufactured in accordance with ASTM Rubber Joint Specifications Designation C 425 for Compression Joints.

The Contractor shall furnish all the material required for the construction of the manholes, including bricks, cement, sand, concrete, lime, hydraulic cement, and all other materials required.

3. Manhole Tees shall comply with the following:

Pipe and class shall be in accordance with ASTM C76

Steel shall be grade 60 steel per ASTM A615 and

Design to resist HS20-44 live loads.

B. ***CLASS OF CONCRETE***

The following are alternate designations for the various cement concrete mixtures on the Contract Plans and Standards.

Class A = 4,000 p.s.i., 1-1/2", 565

Class B = 3,500 p.s.i., 1-1/2", 520

Class C = 3,000 p.s.i., 1-1/2", 470

Class D = 4,000 p.s.i., 3/4", 610

Class DE = 5,000 p.s.i., 3/4", 705

Class F = 5,000 p.s.i., 1-1/2", 660

C. ***PORTLAND CEMENT***

Cement shall be a single brand of approved American made Portland Cement conforming to current specifications of ASTM Standard Specifications for Portland Cement, Designation C 150, Type II, or where required. Type III high early-strength cement.

When used in the work, cement shall be free from lumps and partially or wholly set cement.

D. ***ADMIXTURES***

The use of admixtures to improve workability, facilitation hardening of waterproofing, will not be permitted.

E. ***WATER***

Clean, fresh water shall be used for mixing concrete.

F. ***FINE AGGREGATE***

Concrete sand shall be clean, sound, sharp, screened, and well graded with no grain larger than will pass a 3/3-inch sieve. Not more that 30 percent by weight shall pass a No. 50 sieve.

No sand shall be used which shows a color darker than Fig. 2 when tested according to the standard method of test for Organic Impurities in Sands for Concrete, ASTM Standard Specifications, Designation C 40.

G. ***COARSE AGGREGATE***

Coarse aggregate shall be washed screened gravel or crushed stone, hard, tough, durable, and having not more than 5 percent by weight of deleterious substances and soft fragments. Aggregate shall be well graded from the largest, which shall pass a 1-1/2 inch mesh, to the smallest, which shall pass a 3/8 inch mesh and not over 5 percent passing a 1/4 inch mesh.

H. ***SAMPLES OF AGGREGATE***

If required, the Contractor shall submit clearly labeled samples of sand and coarse aggregate to the Contracting Officer as directed. No aggregates shall be delivered or used before the samples have been approved and aggregates as delivered shall in all respects be equal to the approved samples.

I. ***CONCRETE QUALITY AND PROPORTIONING***

Class A (4,000 p.s.i., 1-1/2", 565) concrete shall be proportioned to produce the thoroughly workable mix resulting in a dense, watertight concrete and meeting the following limitations:

Maximum net water content over bag of cement (decrease possible).6-1/2 gallons

Minimum amount of cement per cubic yard of concrete (increase if necessary to meet other requirements)...5-1/2 bags

The volume of sand and stone shall be measured separately and loose in approved boxes, but may be varied as required so that the sum of their volumes does not exceed six (6) times the volume of cement, and so that the volume of coarse aggregate approximates but does not exceed twice the volume of fine aggregate. Allowance for bulking of fine aggregate shall be made as directed. No caked or lumpy materials shall be used.

When high-early strength cement is used, the above limitations shall also apply except that the minimum compressive strength of 4,000 psi shall be attached in seven (7) days.

Class B (3,500 p.s.i., 1-1/2", 520) concrete shall meet the following limitations:

Maximum net water content over bag of cement (decrease possible). - 8 gallons

Minimum amount of cement per cubic yard of concrete (increase if necessary to meet other requirements). - 5-1/2 bags

The sum of the volumes of fine and coarse aggregates shall not exceed nine (9) times the volume of cement.

J. ***CONCRETE MIXING***

The concrete shall be mixed by a batch mixer having at least 1/2 cubic yard rated capacity, which capacity shall not be exceeded by the mixed material. Adequate facilities shall be provided for accurate measurement of water and control of materials entering the drum. The mixer shall revolve at a uniform peripheral speed of about 200 rpm, and the mixer shall be at least 1-1/2 minutes after all materials are in the drum.

K. ***READY MIXED CONCRETE***

Ready mixed concrete will be permitted provided that the Contracting Officer shall have the right to inspect the plant of the manufacturer and the proportioning and mixing of the concrete and shall be given every facility therefore, and that the materials and methods of portioning, mixing, and delivering are satisfactory and generally in accordance with the above specifications.

The manufacturer shall furnish, through the Contractor, appropriate certificates of tests, materials, proportions, mixing, and strengths from an independent testing laboratory, to such extent as such certificates are available from previous work. Such certificates shall have an effective date not more than six (6) months prior to the time when the concrete will be used and shall be furnished to the Contracting Officer at least seven (7) days before that time. No ready mixed concrete shall be ordered before the Contracting Officer has given the approval.

The quantity of concrete to be mixed or delivered in any one batch shall not exceed the rated capacity of the mixer or agitator, as stated on the nameplate.

Attention is called to the importance of dispatching trucks from the batching plant so that they shall arrive at the site of the work just before the concrete is required, thus avoiding excessive mixing of concrete while waiting or delays in placing successive layers of concrete in the forms.

L. ***CONCRETE FORMS***

Forms shall be constructed of sound lumber, plywood or metal and shall conform accurately to the dimensions, shapes, and elevations shown on the drawings. They shall be mortar-tight, rigid and unyielding during the placing and ramming of concrete.

The Contractor shall be entirely responsible for their adequacy. Forms for manhole inverts shall be smooth, carefully built to true size and shape, and accurately set.

Form ties to be encased in concrete shall not be made of through-bolts or common wire, but shall be an approved well-established type manufactured for the purpose.

Form surfaces to be in contact with concrete shall be oiled, and if re-used, shall first be cleaned, repaired and re-oiled.

No part of any form shall be struck without the consent of the Contracting Officer.

M. ***PLACING CONCRETE***

No concrete shall be poured before foundations, forms, embedded materials, and all preliminary work have been inspected and approved. No concrete shall be laid in water. If chutes are used they shall be of metal or metal lined.

All laitance shall be removed from construction joints and surfaces of previous poured concrete that shall then be roughened and cleaned with a stream of water or compressed air and thoroughly saturated with water.

Horizontal joints and surfaces shall receive a layer of mortar 1/4 inch thick of the same cement-sand ration used in the concrete immediately before the new concrete is deposited.

Concrete shall be deposited in suitable layers, one layer quickly following another, until the pour is completed. While being deposited the concrete shall be thoroughly compacted by rodding and spading or by mechanical vibration. If mechanical vibration is used, it shall be done by experienced operators under close supervision, the concrete consistency as measured by slump shall not exceed three (3) inches and the duration shall be held to the minimum necessary to produce thorough compaction without segregation. Hand spading shall always be used adjacent to forms to produce a smooth dense surface. The concrete shall be thoroughly and carefully rodded about embedded materials.

N. ***CURING AND PROTECTION***

All concrete work shall be protected against damage from the elements and defacement of any nature during construction operations.

Water shall not be permitted to rise on concrete within twenty-four (24) hours after it is placed, or shall running water be allowed to flow over completed concrete within four (4) days after it has been placed.

O. ***CONCRETE REINFORCEMENT***

The steel shall be newly rolled stock, substantially free from mill scale, rust, dirt, grease, or other foreign matter.

P. ***PLACING REINFORCEMENT***

Before being placed in position, reinforcement shall be thoroughly cleaned of loose mill and rust scale, dirt, and other coatings, including ice, that reduce or destroy bond. Where there is delay in depositing concrete after reinforcement is in place, bars shall be reinforced and cleaned when necessary.

Reinforcement shall be accurately positioned as indicated on the drawings, and secured against displacement by using annealed iron wire ties or suitable clips at intersections. Reinforcement shall be supported by concrete or metal supports, spacers, or hangers. Wood blocks, stones, brick, chips, etc., shall not be used.

Reinforcement that is to be exposed for a considerable length of time after having been placed shall be painted with a heavy coat of cement grout.

Q. ***KIND OF BRICK***

The brick shall be good, sound, hard, and uniformly burned brick, regular and uniformly burned brick, regular and uniform in shape and size, of compact texture and satisfactory to the Contracting Officer.

Brick shall be Grade MS conforming to the ASTM Standard Specifications for Sewer Brick (made from clay or shale), Designation C 32 for use under the frame and for all other uses with the exception of the invert and shelf.

Brick shall be Grade SS conforming to the ASTM Standard Specification for Sewer Brick (made from clay or shale), Designation C 32 for invert and shelf.

In case the Contracting Officer rejects any brick, the same shall be immediately removed from the work site and brick satisfactory to the Contracting Officer substituted. Brick shall be culled and completely piled as soon as possible.

R. ***LAYING BRICK***

Bricks shall be clean when laid. For best results, bricks should have a section rate, when laid, not in excess of 40 gpm., in accordance with the NBS test procedure.

Except in cold weather, all brick shall be set as directed by the Contracting Officer to approximate this condition.

Each brick shall be laid in full bed and joint of mortar without requiring subsequent grouting, flushing or filling and shall be thoroughly bonded as directed.

Brick work shall be protected against weather and frost as approved or required by the Contracting Officer.

S. ***PLASTERING***

Outside faces of brick masonry shall be plastered with mortar 1/2 inch thick. The masonry shall be properly wetted as above specified, before the plaster is applied.

The plaster shall be carefully spread and troweled so that all cracks are thoroughly worked out. After hardening, the plaster shall be carefully checked, by being tapped, for bond and soundness. Two coats of bituminous

waterproofing material shall then be applied to the hardened plaster. The material shall be "Miniwax Fibrous Brush Coat" made by the Miniwax Company, New York, N.Y.; "Tremco 121 Foundation Coating" made by the Tremco Manufacturing Company, Cleveland, Ohio; "Inertol No. 7" made by Inertol Company, Newark, N.J.; or approval equal. The material shall be applied by brush or spray (using a primer if necessary) in accordance with the direction of the manufacturer.

The Contracting Officer, at his discretion, may require that two (2) coats of the above described bituminous waterproofing material be applied to the outside of pre-cast manholes installed in wet area.

T. *STUBS IN MANHOLES*

The stubs shall be short pieces cut from the bell end of the pipe, sealed as specified under Items 230-232, Manholes, A. Description. The stubs shall be set to the required line and elevation and encased in the manhole masonry as shown on the drawings or as directed by the Contracting Officer.

U. *MANHOLE VACUUM TESTING*

Vacuum Test: The work under this section shall be for new construction only, unless otherwise specified by the Contracting Officer. Testing required in this section shall be a subsidiary obligation of the contractor at no additional cost to the City of Worcester.

Vacuum Test: The vacuum test shall be conducted in accordance with ASTM C1244. Test results will be judged by the length of time it takes for the applied vacuum to drop from 10 inches of mercury to 9 inches. If the time is less than that listed in Table 1 of ASTM C1244, the manhole will have failed the test. Test times from Table 1 are excerpted below.

TABLE 1 - Minimum test times for various manhole diameters.

Diameter (Inches)	**48**	**60**	**72**
Depth (Feet)		**Times (Seconds)**	
0 - 12	30	39	49
12 - 16	40	52	67
16 - 20	50	65	81
20 - 24	59	78	97
26 - 30	74	98	121

If the manhole fails the initial test, the Contractor shall locate the leaks and make proper repairs. Leaks may be filled with wet slurry of accepted quick setting material. If the manhole should again fail the vacuum test, additional repairs shall be made, and the manhole water tested as specified below.

Water Exfiltration Test: After the manhole has been assembled in place, all lifting holes shall be filled and pointed with an approved non-shrinking mortar. All pipes and other openings into the manhole shall be suitably plugged and the plugs braced to prevent blow out. The test shall be made prior to placing the shelf and invert. If the groundwater table has been allowed to rise above the bottom of the manhole, it shall be lowered for the duration of the test.

The manhole shall be filled with water to the top of the cone section. If the excavation has not been backfilled and observation indicates no visible leakage, that is, no water visibly moving down the surface of the manhole, the manhole may be considered to be satisfactorily watertight. If the test, as described above, is unsatisfactory as determined by the Contracting Officer or if the manhole excavation had been backfilled, the test shall be continued. A period of time may be permitted if the Contractor so wishes, to allow for absorption by the manhole. At the end of this period, the manhole shall be refilled to the top of the cone, if necessary, and a measuring time of at least 8 hours begun. At the end of the test period, the manhole shall be refilled to the top of the cone, measuring the volume of water added. This amount shall be extrapolated to a 24-hour loss rate and the leakage determined on the basis of depth. The leakage for each manhole shall not exceed one gallon per vertical foot for a 24-hour period. If the manhole fails this requirement, but the leakage does not exceed 3 gallons per vertical foot per day, repairs by approved methods may be made as directed by the Contracting Officer to bring the leakage within the allowable rate of one gallon per foot per day. Leakage due to a defective section or joint or exceeding the 3-gallon per vertical foot per day shall be cause for rejection of the manhole. It shall be the Contractor's responsibility to uncover the rejected manhole as necessary and to disassemble, reconstruct or replace it as directed by the Contracting Officer. The manhole shall then be retested and, if satisfactory, interior joints shall be filled and pointed. No adjustment in the leakage allowance will be made for unknown causes such as leaking plugs, absorption, etc. It shall be assumed that all loss of water during the test is a result of

leaks through joints or through the concrete. Furthermore, the Contractor shall take any steps necessary to assure the Engineer that the water table is below the bottom of the manhole throughout the test.

If the groundwater table is above the highest joint in the manhole, and there is no leakage into the manhole, as determined by the Contracting Officer, such a test can serve to evaluate water-tightness of the manhole. However, if the Engineer is not satisfied with the results, the Contractor shall lower the water table and carry out the test as described hereinbefore.

Cleaning: All new manholes shall be thoroughly cleaned of all silt, debris and foreign matter of any kind, prior to final inspection.

V. ***MEASUREMENT AND PAYMENT***

Manholes bases including excavation and disposal, crushed stone bed, backfill reinforced Class A (4,000 p.s.i., 1-1/2", 565) concrete base and/or pre-cast, reinforced concrete base, brick invert and that portion of the manhole wall from the manhole base to the top of the invert shelf shall be considered as one unit and shall be paid for under the appropriately lettered portion of 230.

Manhole walls and cones will be paid for by the vertical foot including excavation and gravel, disposal, under the appropriately lettered portion of Item 231, measured from the bottom of the frame to the highest point of the manhole base, including the installed manhole steps.

GRAVEL BACKFILL SHALL BE FURNISHED BY THE CONTRACTOR AT NO ADDITIONAL COST, AND SHALL BE POWER TAMPED IN 12 INCH LIFTS, JETTED, OR CDF MAY BE USED AS DIRECTED BY THE CONTRACTING OFFICER.

Hauling, handling, and installing of standard cast-iron manhole frames and covers will be paid for under the appropriately lettered portion of Item 236. The stubs and stoppers in the manholes shall be installed and sealed without additional compensation.

Where manholes are installed over existing sewer pipes, the portion of the sewer pipe within the manhole above the installed brick shelf shall be removed by appropriate means so as to conform accurately with the shelf and no additional compensation shall be paid for the removal and disposal of the portion of the pipe above the shelf.

Rock excavation and disposal for manholes shall be measured and paid for under Item 121, Trench Rock Excavation, in addition to the installation price of manhole bases and manhole sections. The limits of payment for trench rock excavation will be those shown on the detail titled “Typical Trench Section in Rock” in this book.

ITEM 233 REMODEL EXISTING MANHOLE

A. ***GENERAL***

The work to be done under this item shall include furnishing all labor, materials and equipment required to break into existing manholes, re-shape and re-build existing inverts.

B. ***MEASUREMENT AND PAYMENT***

This item shall be paid per each.

ITEM 233.1 REMODEL EXISTING MANHOLES FOR LOW PRESSURE SEWER FORCE MAIN INSTALLATION

A. ***GENERAL***

This work shall include furnishing all labor, material and equipment required to break in the existing manhole. It shall also include installation of the inside drop in accordance with Inside Chimney.

B. ***MEARUREMENT AND PAYMENT***

The method of payment for this Item is per each complete in place.

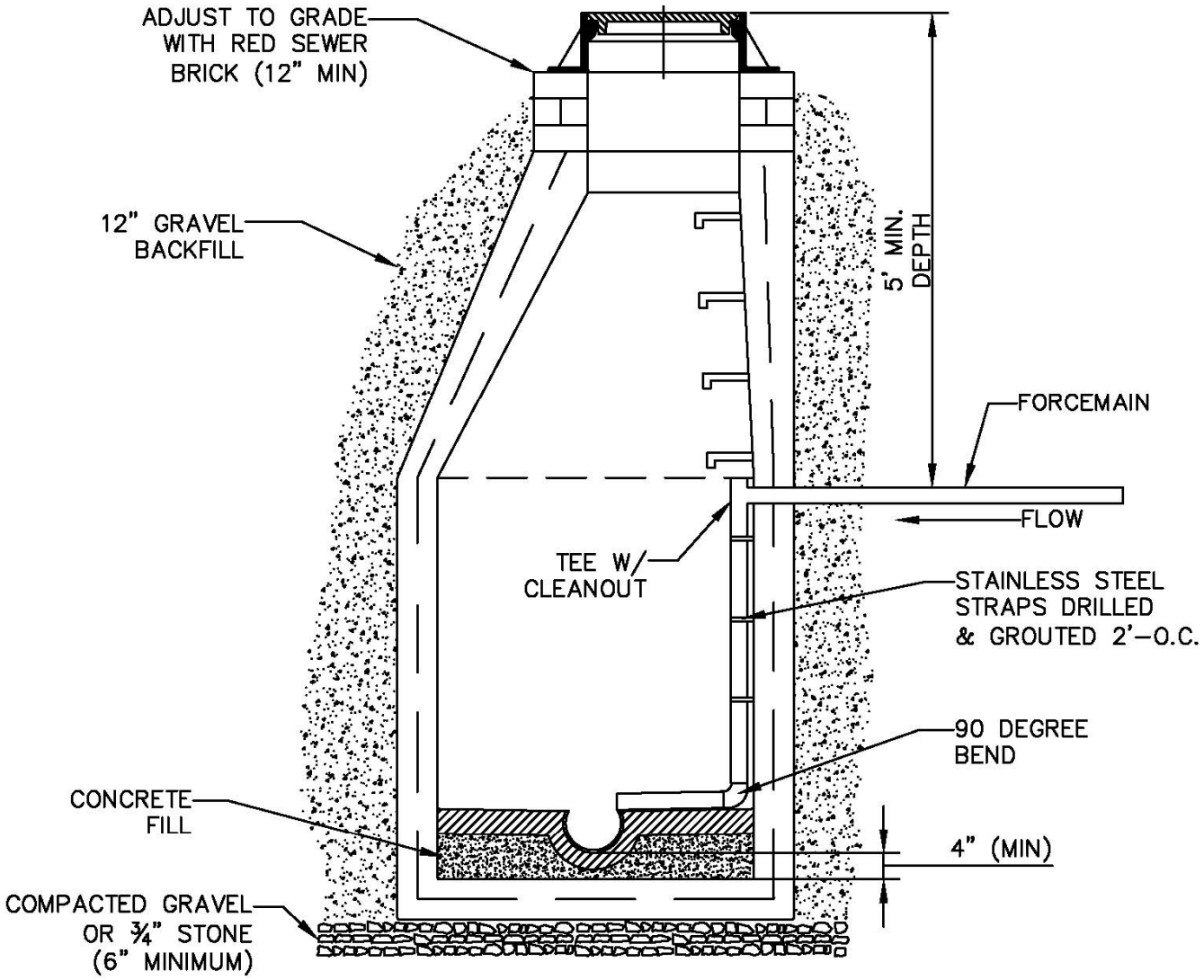

REMODELED MANHOLE SHOWING FORCEMAIN

The work to be done under Items 235 thru 236 shall include the furnishing, handling and installation to finish grade of Worcester standard castings as specified. This includes removal and disposal of deficient castings, where these items replacements, at the contractor's expense.

ITEM 235 CATCH BASIN FRAME & GRATE

ITEM 236 MANHOLE FRAME & COVER

A. ***INSTALLATION OF CASTING FRAMES***

Casting frames shall be set on a full bed of mortar, set to finish grade and concentric with the masonry. All voids beneath the bottom flange shall be completely filled to make a watertight fit. A ring of mortar at least 1 inch thick shall be placed around the outside of the bottom flange extending to the outer edge of the masonry all around the frame. A minimum 12 inches of red sewer brick, grade MS only, shall be used under casting.

B. ***TECHNICAL SPECIFICATIONS***

All construction castings shall meet the requirements of AASHTO M306 and shall be supplied by East Jordan Iron Works, Inc. – LeBaron Foundry or approved Equal. All manufacturers will need their drawings and weights reviewed by Worcester DPW – Engineering to determine if the proposed item is equal.

Catch Basin grate shall be EJIW 7288M or LeBaron L28SG1. Catch basin inlet frame shall be EJIW 7288Z (4-Flange), EJIW 7288Z1 (3-Flange) or LeBaron LF288, Type E.

Manhole frame and cover shall be EJIW 1056Z frame and EJIW 1056A cover or LeBaron LC239/L23C-1. Non bolted casting manhole covers shall be supplied with a closed pickhole and shall show the wording 'Worcester, A Town June 14, 1722: A City February 29, 1848" cast into said cover. Castings that are supplied bolted and watertight may have alternate lettering.

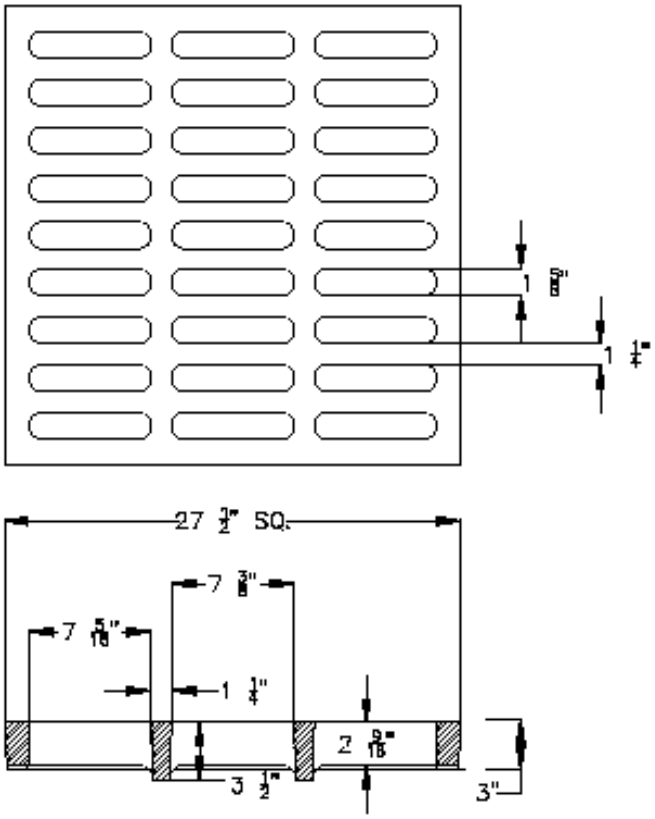

CATCH BASIN GRATE

EJIW 7288M, LEBARON L28SG1, OR EQUAL

SEPTEMBER 25, 2009		DEPARTMENT OF PUBLIC WORKS AND PARKS Engineering Division 20 East Worcester St, Worcester MA 01604				
CATCH BASIN GRATE						
NOT TO SCALE						
SHEET 1 OF 1			NO.	DATE	DESCRIPTION	BY

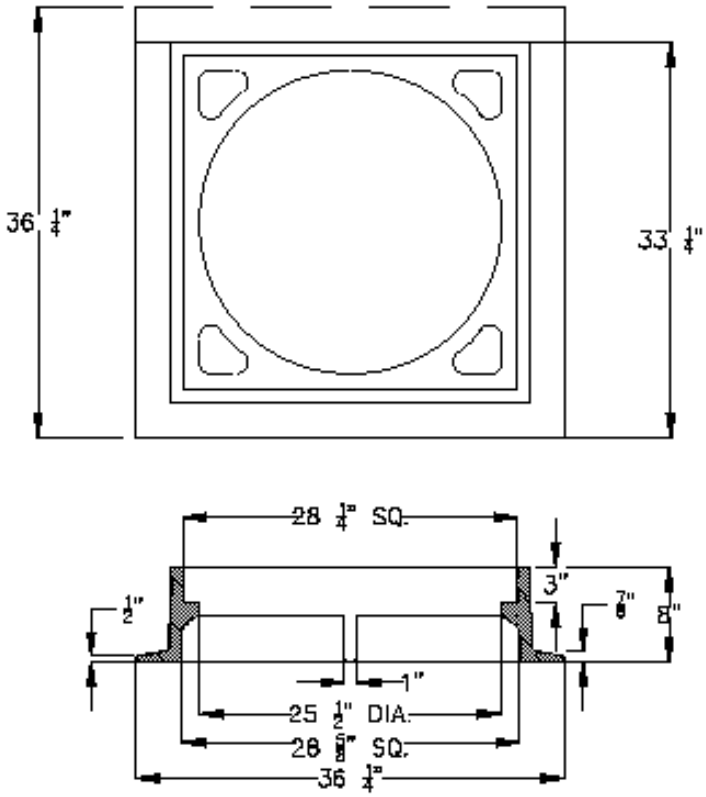

CATCH BASIN FRAME

EJIW 7288Z1 (3 FLANGE), EJIW
7288Z (4 FLANGE), LEBARON
LF288, OR EQUAL

SEPTEMBER 25, 2009		DEPARTMENT OF PUBLIC WORKS AND PARKS Engineering Division 20 East Worcester St, Worcester MA 01604				
CATCH BASIN FRAME						
NOT TO SCALE						
SHEET 1 OF 1			NO.	DATE	DESCRIPTION	BY

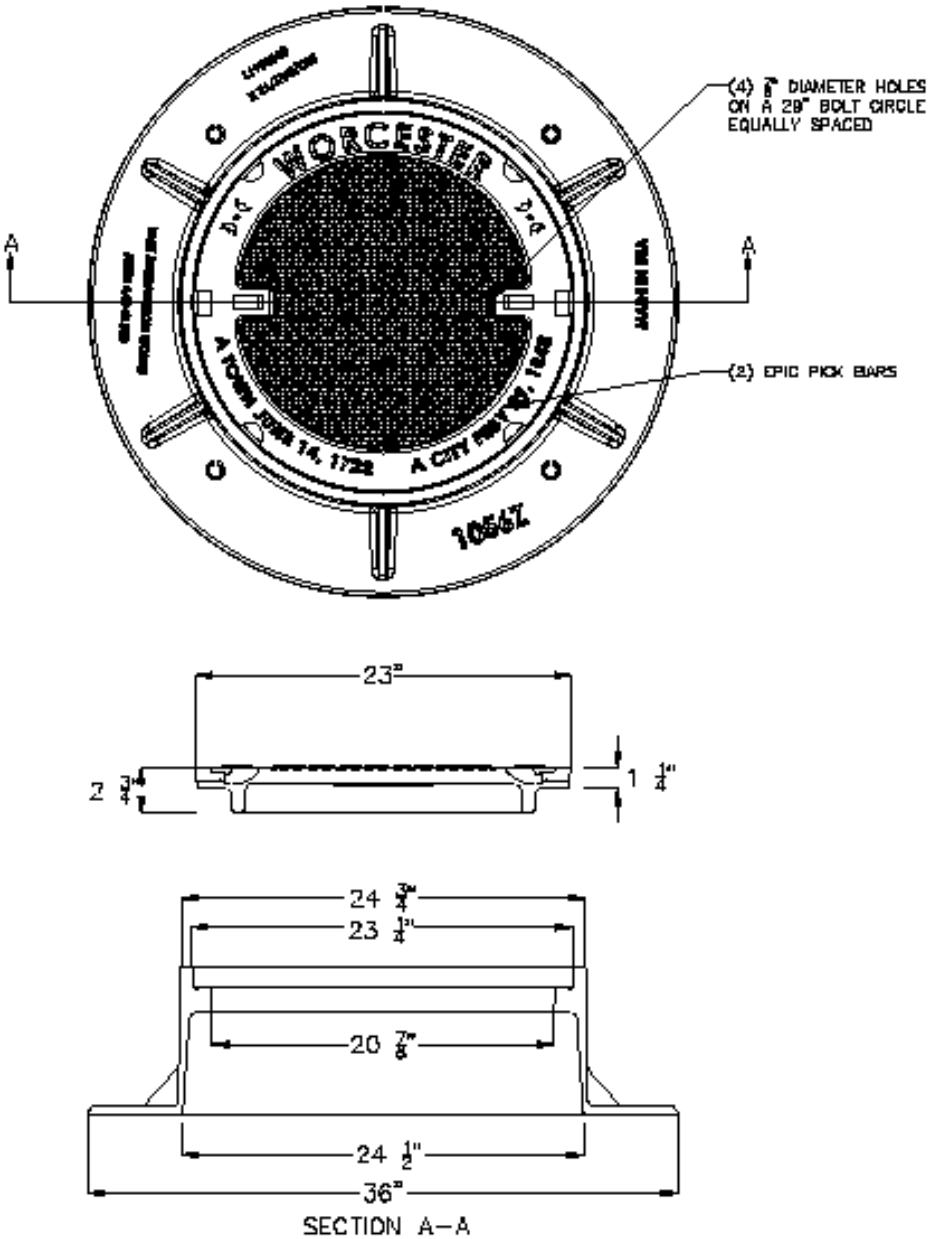

MANHOLE FRAME & COVER ASSEMBLY

MANHOLE FRAME & COVER EJIW 1056Z/1056A,
LEBARON LC239/LZ3C–1, OR EQUAL.

JANUARY 14, 2020		DEPARTMENT OF PUBLIC WORKS AND PARKS	NO.	DATE	DESCRIPTION	BY
MANHOLE FRAME & COVER ASSEMBLY		Engineering Division				
NOT TO SCALE		20 East Worcester St, Worcester MA 01604				
SHEET 1 OF 1						

C. ***MEASUREMENT AND PAYMENT***

Catch basin frame and grate, cascade grate with 24" square frame, cascade grate adapter, cascade grate, or manhole frame and cover shall be paid per each complete in place, and set to finish grade as per instructed by the Contracting Officer.

The work to be done under Item 237 shall include the construction of outside drops for sanitary manholes) Outside drops are to be constructed where shown on the design drawing or as specified by the Contracting Officer. This item shall include all labor, materials, and equipment required to furnish and install all piping, fittings, and masonry.

ITEM 237.08 8 INCH OUTSIDE MANHOLE DROP

ITEM 237.10 10 INCH OUTSIDE MANHOLE DROP

ITEM 237.12 12 INCH OUTSIDE MANHOLE DROP

ITEM 237.15 15 INCH OUTSIDE MANHOLE DROP

ITEM 237.18 18 INCH OUTSIDE MANHOLE DROP

A. ***MEASUREMENT AND PAYMENT***

The unit price for outside manhole drops shall be per vertical foot complete. Measurement shall be made from the invert at the manhole to the invert at the inlet pipe.

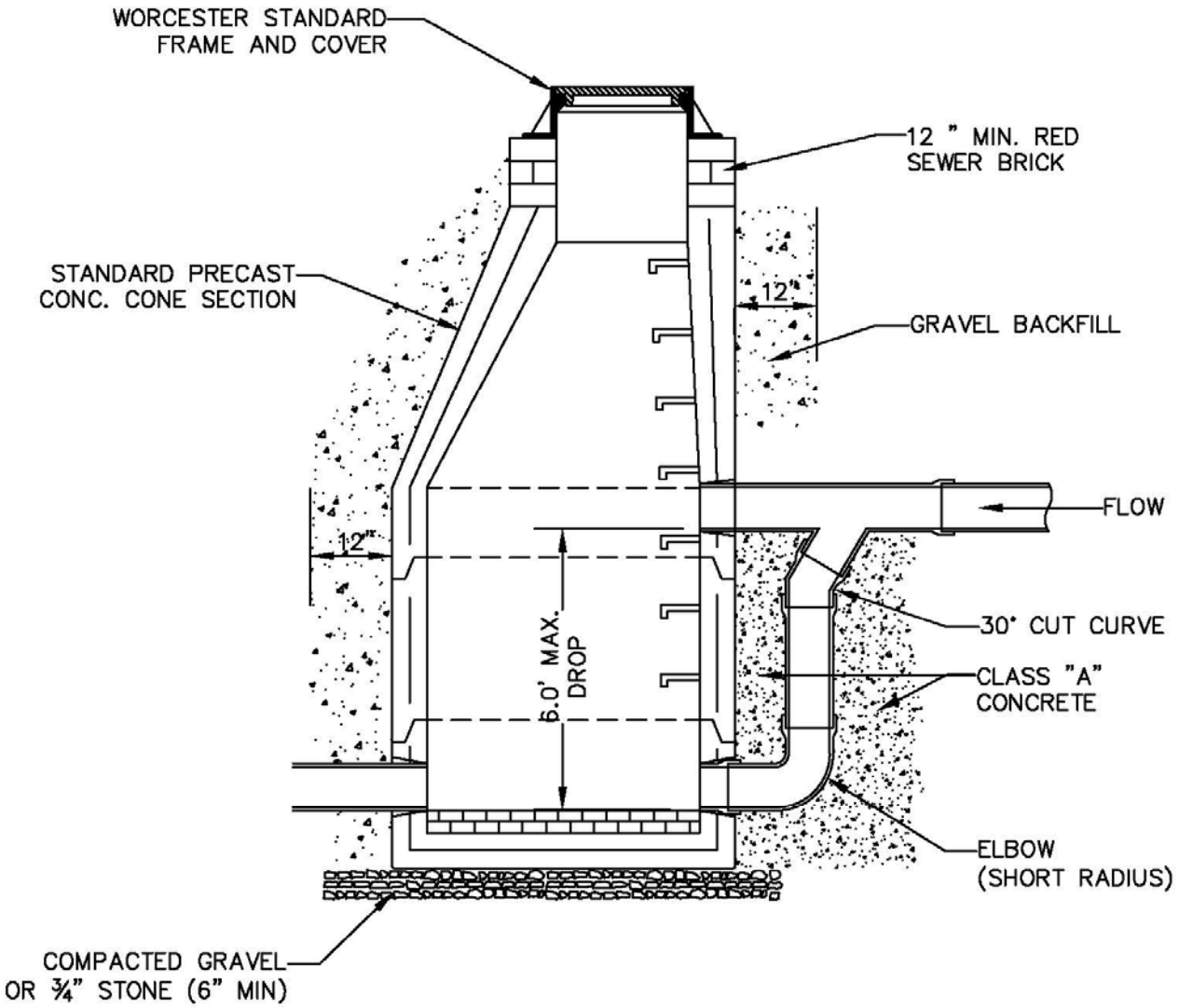

TYPICAL DROP MANHOLE

ITEM 238 6 INCH CHIMNEY

A. *DESCRIPTION*

The work to be done under Item 238 shall include the construction of 6-inch chimneys for sanitary house connections. Chimneys are to be constructed where specified on the design drawings or as specified by the Contracting Officer. Construction of 6-inch chimneys shall conform to details shown on a plan titled Chimney.

This item shall include all labor, materials, and equipment required to furnish and install all piping, fittings, and masonry.

B. *MEASUREMENT AND PAYMENT*

The unit price for 6-inch chimneys shall be per vertical foot complete. Measurement shall be made from the invert of the trunk sewer to the top of the "Y" on the chimney.

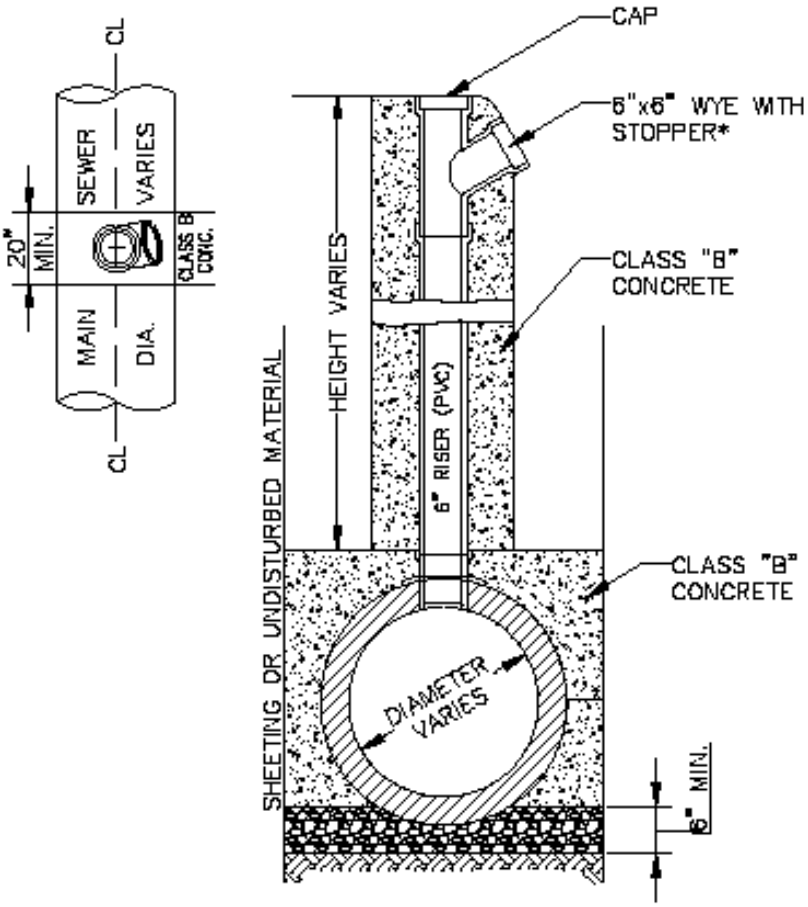

*NOTE:
FOR TWO CONNECTIONS US A DOUBLE WYE WITH 6" RISER PIPE.

TYPICAL CHIMNEY DETAIL

SEPTEMBER 25, 2009			
TYPICAL CHIMNEY DETAIL			
NOT TO SCALE			
SHEET 1 OF 1			

DEPARTMENT OF PUBLIC WORKS AND PARKS
Engineering Division
20 East Worcester St, Worcester MA 01604

NO.	DATE	DESCRIPTION	BY

ITEM 239 TYPICAL TERMINAL CLEANOUT MANHOLE

ITEM 239.1 TYPICAL CLEANOUT MANHOLE

A. *GENERAL*

This work to be done under Item 239 shall include furnishing and installing complete manhole bases and sections including hauling, excavation, placement of structures, backfilling and all labor, equipment and incidentals necessary to complete the work. All pre-cast manhole bases and sections shall conform to ASTM Specifications C 478. Installation of pre-cast manholes shall be as shown on a plan titled Typical Terminal Cleanout for Pressure sewers and in accordance with Item 230.4 and 231.4.

B. *MEASUREMENT AND PAYMENT*

Payment of the bid price for each low pressure sewer terminal cleanout manhole shall be full compensation for all clearing, excavation, backfill and compaction required for the installation of the manhole and for furnishing and installing the pre-cast manhole, piping within the manhole to one (1) foot outside of the manhole, fittings, valves, pipe insulation and all labor, equipment and materials required or incidental to the work.

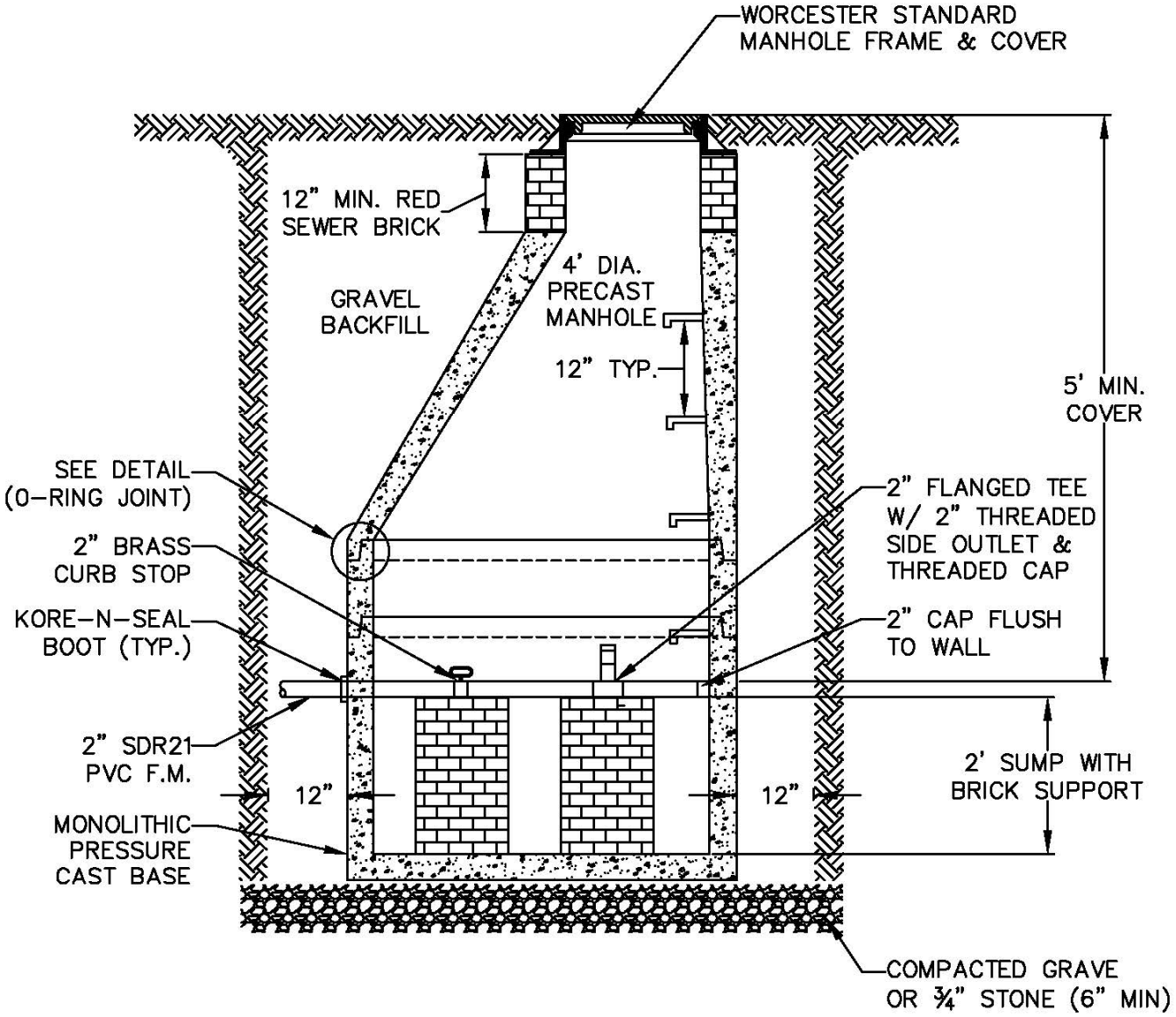

TYPICAL TERMINAL CLEANOUT-MANHOLE (FORCE MAIN)

ITEM 240 WORCESTER STANDARD CATCH BASIN (5 FOOT DIAMETER)

A. *GENERAL*

Catch basins shall be constructed of the materials, size, form thickness and in the manner shown in detail on a plan titled Typical Pre-Cast Catch Basin and shall conform to the applicable provisions of Section 201, (MSSHB).

Pre-cast concrete basins shall consist of pre-cast reinforced riser sections, a flat slab top and top ring, and a base section conforming to the typical catch basin details.

Pre-cast catch basin sections shall be manufactured in accordance with ASTM Designation C478. The minimum compressive strength of the concrete for all sections shall be 4,000 PSI on a 28 Day Test. The circumferential steel reinforcement for riser sections and base walls shall be 0.17 square inch per lineal foot. Reinforcing in the bottoms of bases shall be of the same design. Reinforcing in top slabs to be as given on the standard catch basin detail. Reinforcing shall extend into the tongue and groove of each catch basin section wall.

Each section of the pre-cast manhole shall have two holes for the purpose of handling and laying. These holes shall be tapered and shall be plugged with hydraulic cement after installation.

Type II cement to be used. Sections shall be set so as to be vertical and in true alignment. Joints shall be completely mortared by buttering the groove and immediately prior to setting a section assuring a watertight sump.

Catch basin connection to the catch basin shall be made prior to constructing the catch basin above the invert grade of the trap.

Red sewer brick shall be used in the catch basins. Limits of Class B rock excavation will be six (6) inches below and twelve (12) inches outside the base.

GRAVEL BACKFILL SHALL BE FURNISHED BY THE CONTRACTOR AT NO ADDITIONAL COST, AND SHALL BE POWER TAMPED IN TWELVE (12) INCH LIFTS, JETTED OR CDF MAY BE USED AS DIRECTED BY THE CONTRACTING OFFICER.

All excavated material, except as directed by the Contracting Officer, shall be removed from the site 3/4" crushed stone foundation six (6) inches in depth is required under the pre-cast base at no additional cost.

Traps, frames, grates and inlets shall be furnished and installed as specified under their respective items. A minimum of 12 inches of red sewer brick shall be used under the frame. The grates shall fit so as to prevent rocking or unnecessary space at the joints.

B. *MEASUREMENT AND PAYMENT*

Pay item 240 shall be catch basins (each) complete in place. The cost for Class B rock, frames and grates, inlet stones, and green traps will be paid under Items 120, 235, 245 and 246.

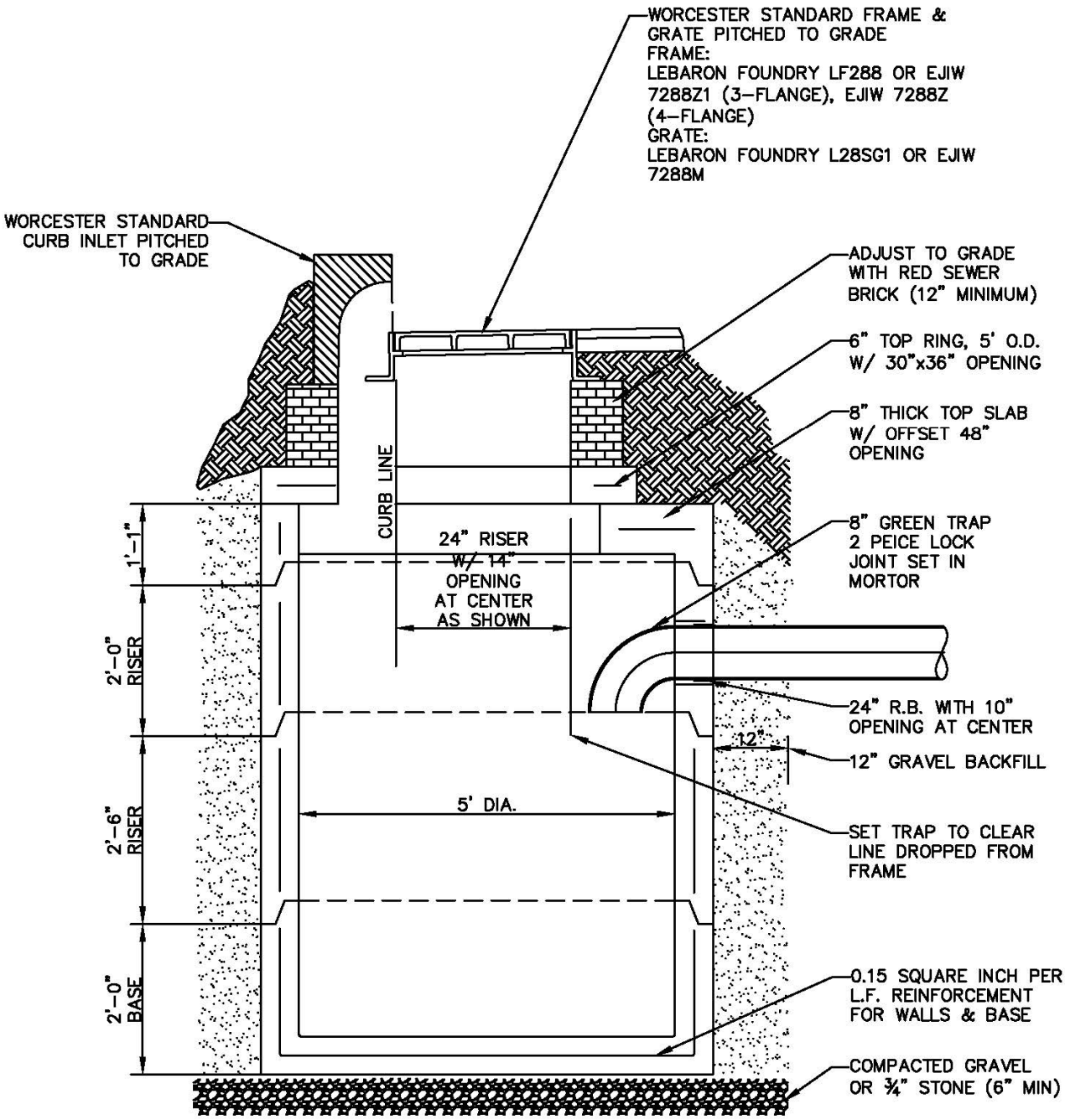

TYPICAL PRECAST CATCH BASIN

ITEM 241 CATCH BASIN ALTERNATE TYPE

ITEM 241.1 DROP INLET

A. *GENERAL*

The work to be done under Item 241 shall conform to the details shown on a plan titled Catch Basin Alternate Type and shall conform to the applicable provisions of Section 220, (MSSHB).

The work to be done under Item 241.1 shall conform to the detail shown on a plan titled Drop Inlet Detail and shall conform to the applicable provisions of Section 220, (MSSHB). The cost for frames and grates and inlet stones, will be paid under Items 235 and 245.

B. *MEASUREMENT AND PAYMENT*

Pay item 241 shall be catch basin (each) and catch basin inlet box (including drop inlet if used), complete in place. The cost for Class B rock, frames and grates, frames and covers, inlet stones, and green traps will be paid under Items 120, 235, 236, 245 and 246.

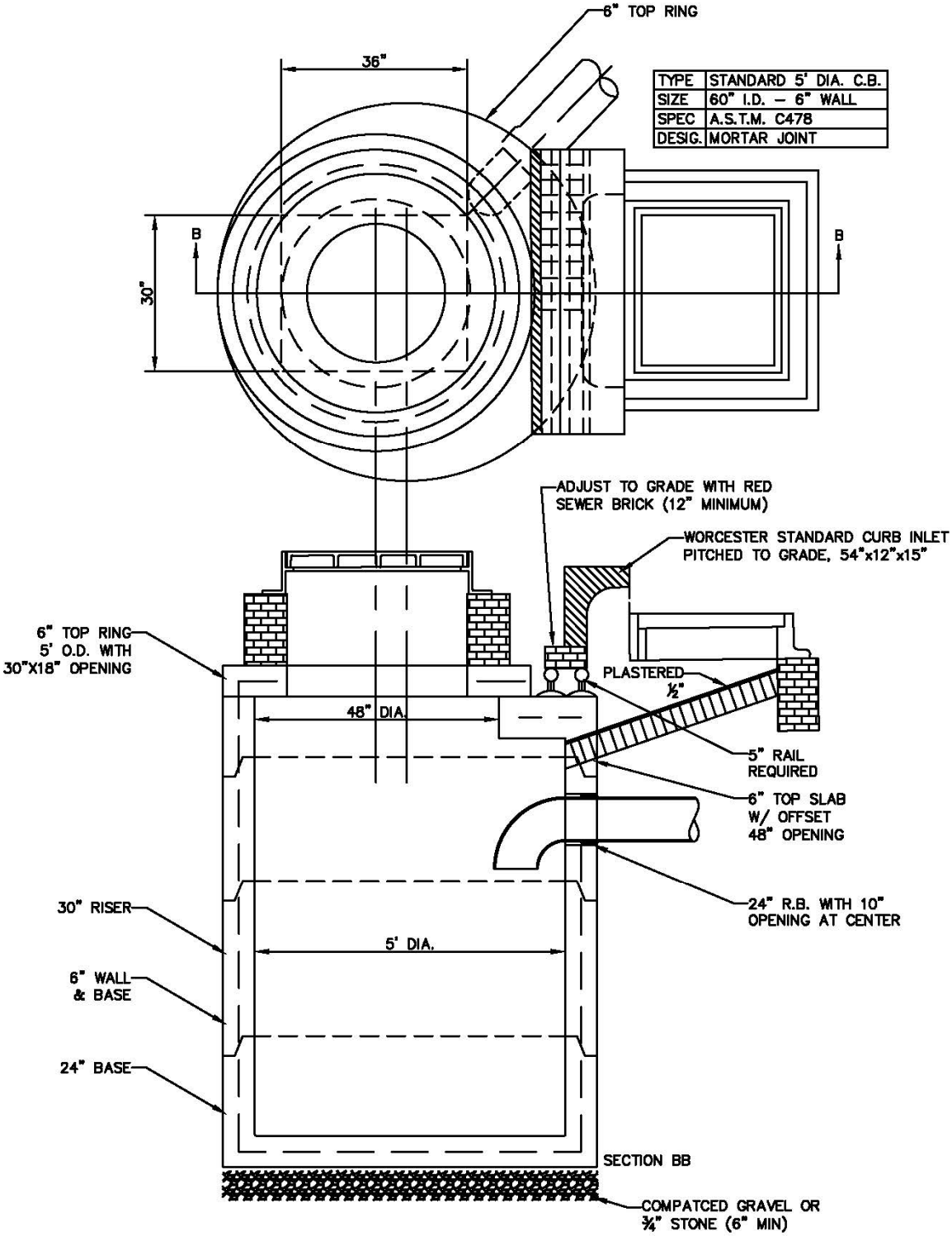

CATCH BASIN ALTERNATE TYPE

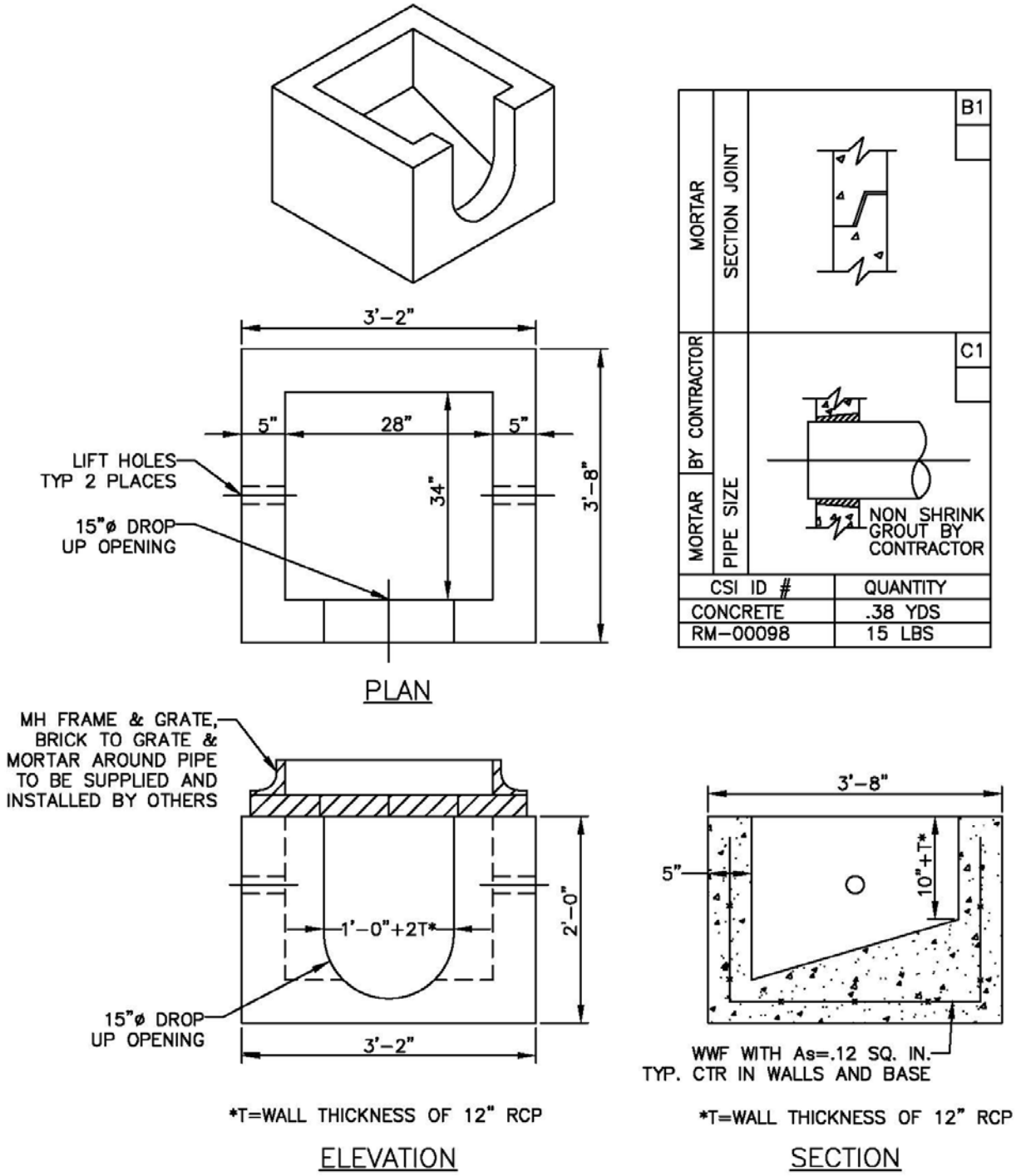

DROP INLET DETAIL

The work to be done under Items 242 and 243 shall conform to the applicable provisions of Section 220, (MSSHB) and shall consist of the removal and rebuilding of existing brick work in the basin walls to line and grade to receive the Worcester standard frame, grate, and inlet stone. The existing trap shall be removed (if not a green trap) and a new green trap shall be installed. The Contractor will be required to return the old grates, frames, and traps to the Department of Public Works and Parks at 1065 Millbury Street Yard, unless otherwise directed by the Contracting Officer. All excavation, gravel backfill, replacing Superpave Bituminous Concrete, or cutting of existing granite curb required shall be included at no additional cost to the City.

ITEM 242 CATCH BASIN REBUILD "D" FRAME TO SQUARE FRAME

ITEM 243 CATCH BASIN REBUILD BORDERSTONE TO SQUARE FRAME

A. ***MEASUREMENT AND PAYMENT***

Payment for this item will be paid for under the contract unit price (each). Frame and grate, green trap and inlet stone shall be furnished and installed under Items 235, 245, 246, complete in place.

ITEM 244 REBUILD EXISTING CATCH BASINS TO ALTERNATE TYPE

A. ***GENERAL***

The work under this item shall include the removal of the catch basin frame and grate and top ring, to a depth sufficient to accommodate the new 6” manhole top ring. The work to be done under this item shall conform to the detail, Catch Basin Alternate Type (ITEM 241), and shall conform to the applicable provisions of Section 220, (MSSHB).

B. ***MEASUREMENT AND PAYMENT***

Pay item 244 shall be paid for per each installed complete in place. The cost for frames and grates removal and replacement, frames and covers, and inlet stone removal and replacement will be paid under Items 254.1, 236, and 245.1. The trap shall be inspected as part of this work and be replaced as directed by the Contracting Officer.

ITEM 244.1 REBUILD EXISTING CATCH BASINS

A. ***GENERAL***

A Catch Basin that has been damaged to the point that it will not properly support the frame and grate (This is usually found in older brick Catch Basins), will be reconstructed. The unsuitable portions of the structure shall be removed, as directed by the Contracting Officer, and rebuilt with brick. The work to be done under this item shall conform to the applicable provisions of Section 220, (MSSHB).

B. ***MEASUREMENT AND PAYMENT***

Pay item 244.1 shall be paid for per vertical foot installed, complete in place. The cost for frames and grates removal and replacement and inlet stone removal and replacement will be paid under Items 254.1 and 245.1. The trap shall be inspected as part of this work and be replaced as directed by the Contracting Officer.

ITEM 244.2 REMOVE AND DISPOSE OF EXISTING CATCH BASIN

A. ***GENERAL***

The Contractor shall furnish all additional labor, materials and equipment required to remove and dispose of existing manholes as directed by the Contracting Officer. The work to be done under this item shall conform to the applicable provisions of Section 140, (MSSHB).

B. ***MEASUREMENT AND PAYMENT***

The unit bid price per each shall be full compensation for all work required including salvage and delivery to the City's Department of Public Works and Parks – 1065 Millbury Street Yard of any castings as directed by the Contracting Officer.

ITEM 245 GRANITE INLET STONE

ITEM 245.1 EXISTING GRANITE INLET STONE REMOVE & RESET

A. ***GENERAL***

The work done under these items shall include furnishing, handling and installing Worcester standard granite inlet stone for catch basins. Granite inlet stone shall be as supplied by H.E. Fletcher Company of West

Chelmsford, MA, or approved equal. New or existing inlet stones are to be set level with berms or curbs and pitched to follow roadway profile. Installation of inlet stones shall be as shown on the detail titled ”Typical Inlet Stone for Catch Basin”.

B. ***MEASUREMENT AND PAYMENT***

The unit of payment for granite inlet stones will be per each installed complete in place.

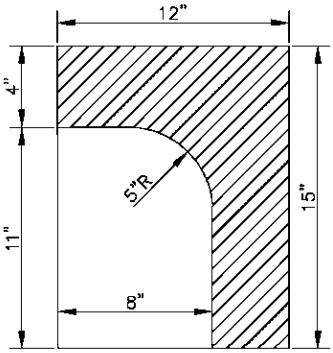

SECTION A-A

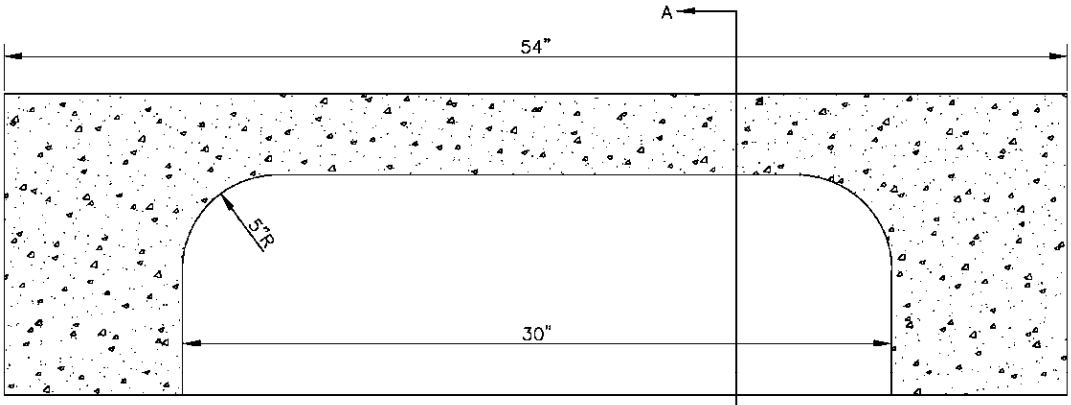

PLAN

GRANITE INLET STONE

TYPICAL INLET STONE FOR CATCH BASIN

SEPTEMBER 25, 2009		DEPARTMENT OF PUBLIC WORKS AND PARKS Engineering Division 20 East Worcester St, Worcester MA 01604				
TYPICAL INLET STONE FOR CATCH BASIN						
NOT TO SCALE						
SHEET 1 OF 1			NO.	DATE	DESCRIPTION	BY

ITEM 246 8 INCH GREEN TRAPS

ITEM 247 12 INCH GREEN TRAPS

A. ***GENERAL***

The work to be done under this item shall include furnishing, handling and installing Worcester standard green traps in catch basins. Green traps shall be as supplied by Tolman Manufacturing Company of Boston, MA., or approved equal. Green traps are to be installed as shown on a plan titled Body and Collar for 8" Trap.

B. ***MEASUREMENT AND PAYMENT***

The unit of payment for green traps will be per each installed complete in place.

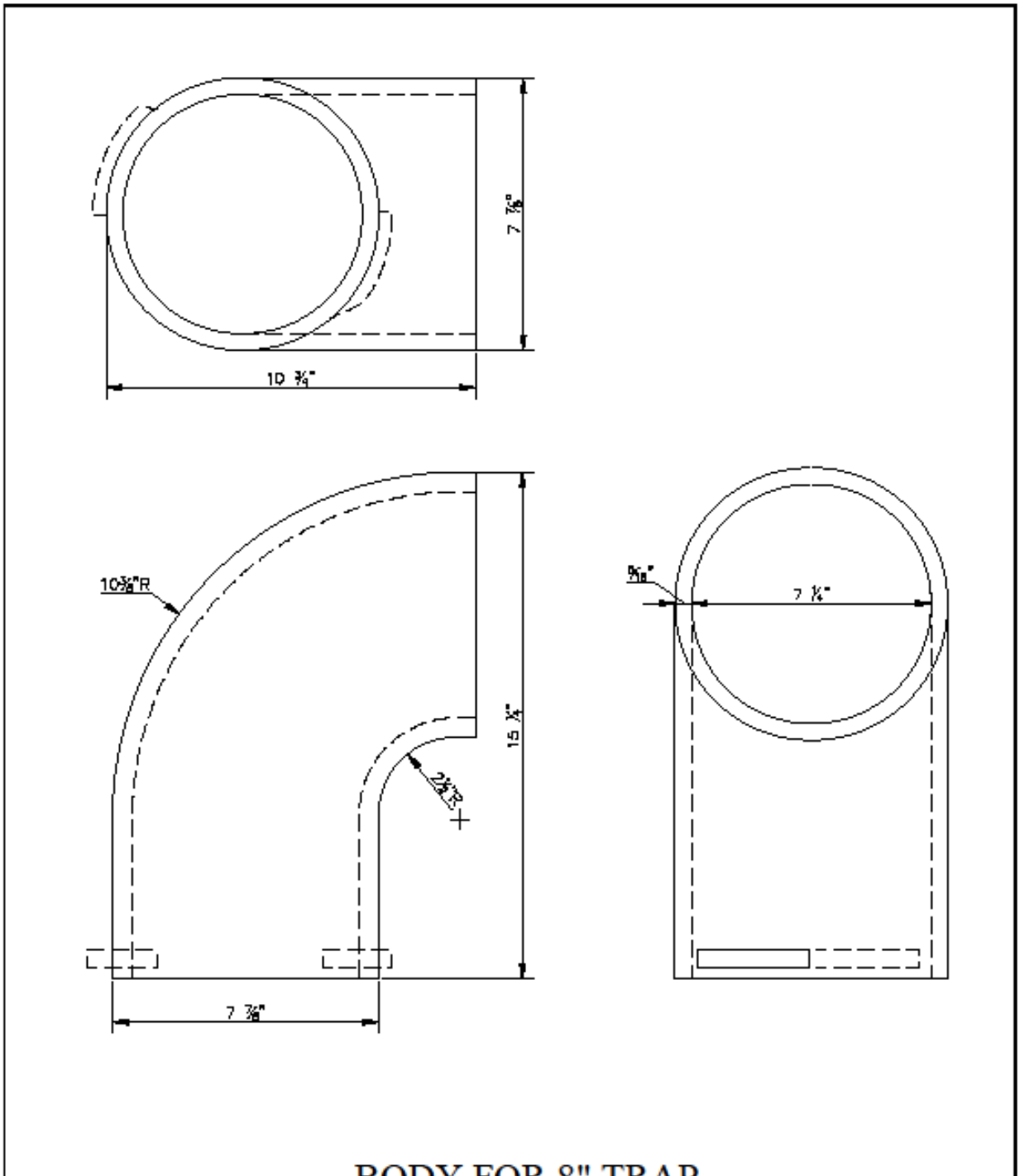

BODY FOR 8" TRAP

SEPTEMBER 25, 2009		DEPARTMENT OF PUBLIC WORKS AND PARKS Engineering Division 20 East Worcester St, Worcester MA 01604				
BODY FOR 8" TRAP						
NOT TO SCALE						
SHEET 1 OF 1			NO.	DATE	DESCRIPTION	BY

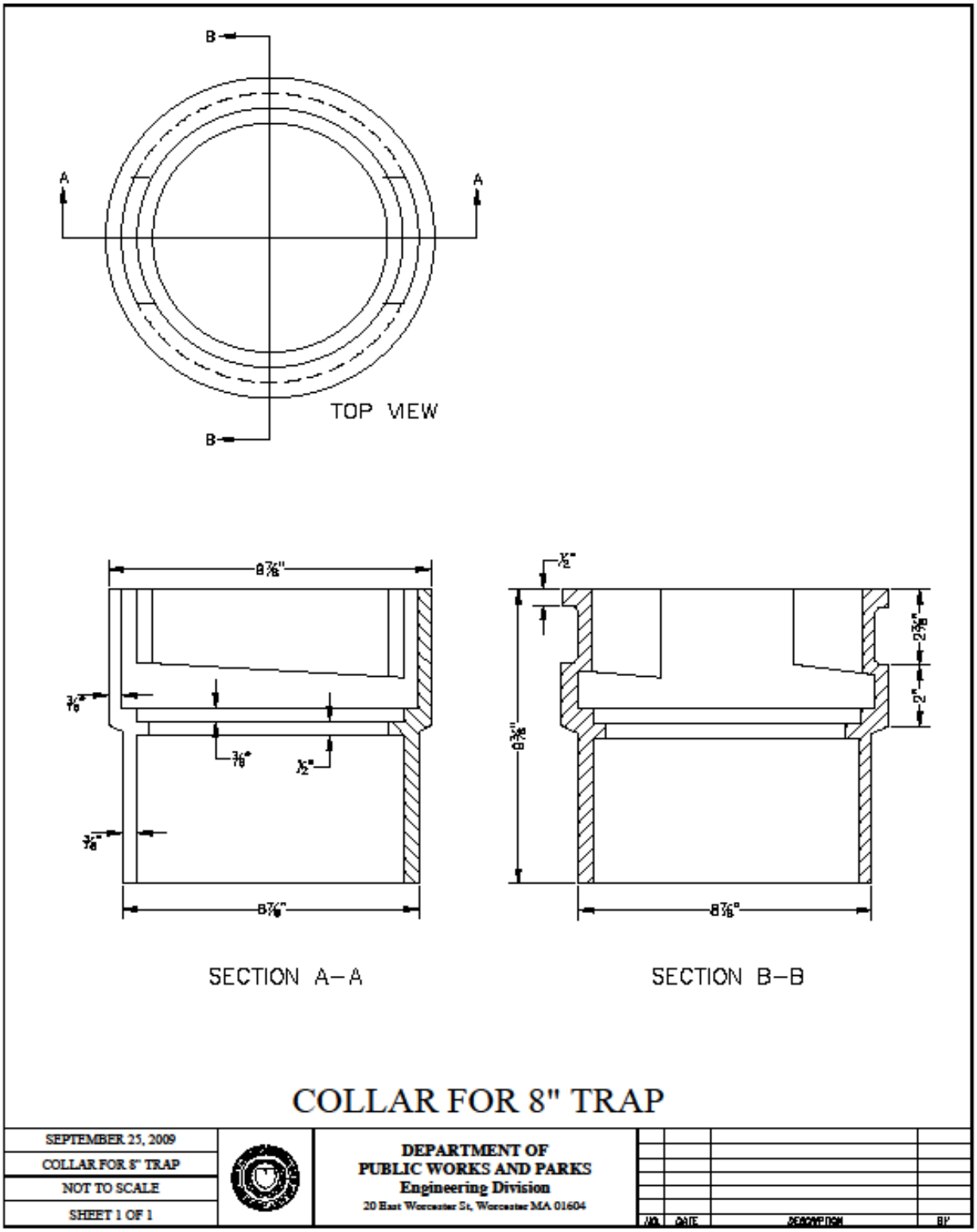
B
A
A
B
TOP VIEW
8⅞"
⅞"
⅞"
⅞"
½"
8⅞"
½"
2⅞"
2"
8¾"
8⅞"
SECTION A–A
SECTION B–B
COLLAR FOR 8" TRAP
SEPTEMBER 25, 2009
COLLAR FOR 8" TRAP
NOT TO SCALE
SHEET 1 OF 1
DEPARTMENT OF
PUBLIC WORKS AND PARKS
Engineering Division
20 East Worcester St, Worcester MA 01604
NO.
DATE
DESCRIPTION
BY

ITEM 249 CATCH BASIN CLEANING

A. ***GENERAL***

The work specified in this item shall include furnishing equipment and labor necessary to clean Worcester standard catch basins and the jetting of the catch basin connection. Catch basins are to be cleaned as thoroughly as possible and to the bottom of each catch basin by means of a truck mounted vacuum catch basin cleaner which uses a high-velocity pressure jet for removing sludge and debris from drainage lines, and simultaneously vacuum the sludge and debris from the catch basin or manhole. Said machine must be approved by the Contracting Officer. Care shall be taken not to damage any portions of the basin particularly that of the headstone, pre-cast structure, brick work or green trap. Any damage to the catch basin or immediate area of roadway or sidewalk shall be restored to its original condition by the Contractor at no expense to the City of Worcester. Non-conforming traps are to be replaced with City standard traps. Any broken connections are to be replaced with City standard pipe. Waste contents from the catch basin will become the property of the Contractor.

Catch Basin cleaning, when part of roadway resurfacing, shall be conducted once the street has been paved to the binder course and prior to placement of the top course.

B. ***MEASUREMENT AND PAYMENT***

The unit payment for catch basin cleaning will be per each complete in place.

ITEM 250 MANHOLE FRAMES, REMOVE, PLATE & RETAIN

A. ***GENERAL***

Under Item 250 the Contractor will remove and plate manhole frames where designated by the Contracting Officer. Each manhole frame shall be removed by the Contractor and retained so that each is stored in a manner as to prevent either theft or breakage. Also, it will be the Contractor's responsibility to remove the grade ring or the first 6 inches of sewer brick (whichever is applicable) so that a minimum of 14 inches clearance exists for pulverizing equipment to pass over said structure. It will also be the Contractor's responsibility to supply a plate that covers the structure completely and which is also strong enough to support construction equipment and to preserve its location for use after the SUPERPAVE base has been laid. Any debris found in the invert will be assumed to be caused by the Contractor and all liabilities including that of cleanup of such debris will be considered a subsidiary obligation of the Contractor. Also it will be the Contractor's responsibility to preserve the manhole frame and grade ring so that it may be reset as indicated under Items 252.1, 252.2, 253.1 & 253.2. Any broken manholes or grade rings caused by the Contractor shall be replaced by same. All excavated areas shall be suitably backfilled by approved compaction methods and the work site shall be left in a neat and clean state.

B. ***MEASUREMENT AND PAYMENT***

The pay item for this work shall be Manhole Frames - Removed, Plated and Retained, paid per each complete in place.

ITEM 252.1 MANHOLE ADJUSTMENT 12 INCH OR LESS GRAVEL

ITEM 252.2 MANHOLE ADJUSTMENT 12 INCH OR LESS RIGID

ITEM 253.1 MANHOLE ADJUSTMENT OVER 12 INCH GRAVEL

ITEM 253.2 MANHOLE ADJUSTMENT OVER 12 INCH RIGID

A. ***GENERAL***

Work to be done under these items shall consist of the adjustment of structures to line and grade and will be paid for under contract unit price for manhole adjustment (12" or less vertical) or (over 12" vertical). Work shall conform to the applicable provisions of Section 220.

When the line or grade of the structure requires change, the Contractor will excavate around manhole structures a minimum 6-foot diameter donut (allowing a minimum width of 20 inches, from the casting. Compaction shall be completed using a compactor weighing a minimum of 250 pounds) to a depth of 8 inches, the masonry shall be removed to such depth as directed by the Contracting Officer and new masonry shall be constructed to conform to the proposed design**.** Material from this excavation will be satisfactorily disposed of by the Contractor. The excavated area will then be filled with SUPERPAVE 12.5 mm Level 2 bituminous concrete binder course placed in two lifts and thoroughly compacted with a plate compactor. Payment for this work shall be covered under the contract price bid for Item 424

Adjusted structures will have ramped protection (i.e. asphalt “doughnuts”) if the street is not paved within 10 days from the date of adjustment. This work will be conducted at no cost to the City.

B. ***MORTAR MIX***

Conproco mortar mix will be used when adjusting manholes. It shall conform to or exceed ASTM C-270 and C-387 specifications. The mortar mix can be supplied by Camosse Masonry Supply of Worcester, MA (or approved equal).

C. ***KIND OF BRICK***

(See Items 230-232, Q. KIND OF BRICK)

D. ***MANHOLE SAFETY RAMPS***

The Contractor shall utilize manhole safety ramps as manufactured by American Highway Products (www.ahp1.com) or approved equal at no additional compensation. Said safety ramps must fit snuggly around manhole frame and at the appropriate elevation. Safety ramps shall be removed just prior to the placement of the final surface layer and removed subsequently from the job site.

E. ***MEASUREMENT AND PAYMENT***

There shall be no additional payment for the handling of pre-cast sections during adjustment of manhole.

The respective item bid shall constitute full payment for the removal, protecting and installing of any castings to be adjusted on the project; the removal of old masonry and the construction of new masonry, all materials, equipment, safety ramps, tools and labor and all other incidental work including excavation, gravel backfilling necessary for the final completion of the item specified. The adjustment for frames for structures built by the Contractor shall be considered a subsidiary obligation of the Contractor and the contract unit price bid for the installation of the structure shall include the cost of adjusting the frames to line and grade. 95% compaction must be achieved around all manholes by mechanical or vibratory equipment.

Payment for the SUPERPAVE bituminous concrete will be paid under Item 424 Various Areas (.8 ton per manhole).

The work to be done under Items 254 thru 255 shall consist of the adjustment of structures to line and grade and will be paid for under contract unit price for catch basin adjustment (12" or less vertical) or (over 12" vertical). Work shall conform to applicable provisions of Section 201, 220.

ITEM 254.1 CATCH BASIN ADJUST TO LINE AND/OR GRADE 12 INCH OR LESS, GRAVEL

ITEM 254.2 CATCH BASIN ADJUST TO LINE AND/OR GRADE 12 INCH OR LESS, RIGID

ITEM 255.1 CATCH BASIN ADJUST TO LINE AND/OR GRADE 12 INCH OR OVER, GRAVEL

ITEM 255.2 CATCH BASIN ADJUST TO LINE AND/OR GRADE 12 INCH OR OVER, RIGID

A. ***GENERAL***

When the line or grade of the structure requires change, the Contractor will excavate around catch basins a minimum of 18" wide to a depth of 8 inches, the masonry shall be removed to such a depth as directed by the Contracting Officer and new masonry shall be constructed to conform to the proposed design. Material from this excavation will be satisfactorily disposed of by the Contractor. The excavated area will then be filled with SUPERPAVE 12.5 mm Level 2 bituminous concrete binder course placed in two lifts and thoroughly compacted with a plate compactor. Payment for this work shall be covered under the contract price bid for Item 424. There shall be no additional payment for the handling of pre-cast sections during adjustment of catch basins.

Adjusted structures will have ramped protection (i.e. asphalt “doughnuts”) if the street is not paved within 10 days from the date of adjustment. This work will be conducted at no cost to the City.

B. ***MORTAR MIX***

Conproco mortar mix will be used when adjusting manholes. It shall conform to or exceed ASTM C-270 and C-387 specifications. The mortar mix can be supplied by Camosse Masonry Supply of Worcester, MA (or approved equal).

C. ***KIND OF BRICK***

Use ASTM Grade MS only.

D. ***MEASUREMENT AND PAYMENT***

The unit price shall constitute full payment for the removal, protecting and installing of any castings to be adjusted on the project; the removal of old masonry and the construction of new masonry, all materials, equipment, concrete tools and labor and all other incidental work including excavation and gravel backfilling necessary for the final completion of the item specified. The adjustment for catch basin frames for structures built by the Contractor shall be considered a subsidiary obligation of the Contractor and the contract unit price bid for the installation of the structures shall include the cost of adjusting the frames. 95% compaction must be achieved around all catch basins by mechanical or vibratory equipment.

Payment for the SUPERPAVE bituminous concrete will be paid under Item 424 Various Areas (1 ton per catch basin).

ITEM 260.06 6 INCH SUBDRAIN COMPLETE

ITEM 260.08 8 INCH SUBDRAIN COMPLETE

A. ***GENERAL***

This work shall consist of constructing sub-drains using fabric wrapped pipe, crushed stone, and filter fabric material, in accordance with the plans and these specifications and in close conformity with the lines and grades shown on the plans or established by the Contracting Officer. The drain trench shall be excavated to the depth designated on the plans, or, if directed, to a stratum of impervious material.

Where no structure is to be placed at the ends of the sub-drain pipe, the trench shall be excavated a distance of three feet beyond the end of the pipe. The excavation shall proceed in advance of the actual drain construction only to the extent the Contracting Officer directs. The width of the trench for pipe of more than 12 inches in diameter shall be 1 foot greater than the nominal diameter of the pipe. The width of the trench for pipe 12 inches or less in diameter shall be 2 feet. Filter fabric shall be continuously placed around the perimeter of the crushed stone envelope.

Where rock is encountered in the excavation, no part of any rock remaining in the trench shall come within 6 inches of any portion of the pipe.

The pipe shall be laid in accordance with a plan titled Typical Sub-Drain Detail.

Pipes used shall be round, perforated PVC pipe, or equal.

Inlets and open outlets of sub-drains shall be covered with a #23 gauge galvanized wire screen of 1/4-inch mesh satisfactorily fastened to the pipe.

Sub-drain pipe shall be measured in place and the quantity to be paid for shall be the length of pipe actually constructed, plus an allowance of three (3) feet for open ends.

The sub-drain is to be connected into an existing catch basin above the trap. The connection is to be made by breaking into the catch basin, inserting the PVC into the hole, and mortaring the pipe into the catch basin.

B. ***MEASUREMENT AND PAYMENT***

The above work will be paid for at the contract unit price per linear foot under the appropriate item for sub-drains with the specified size and kind of pipe, complete in place.

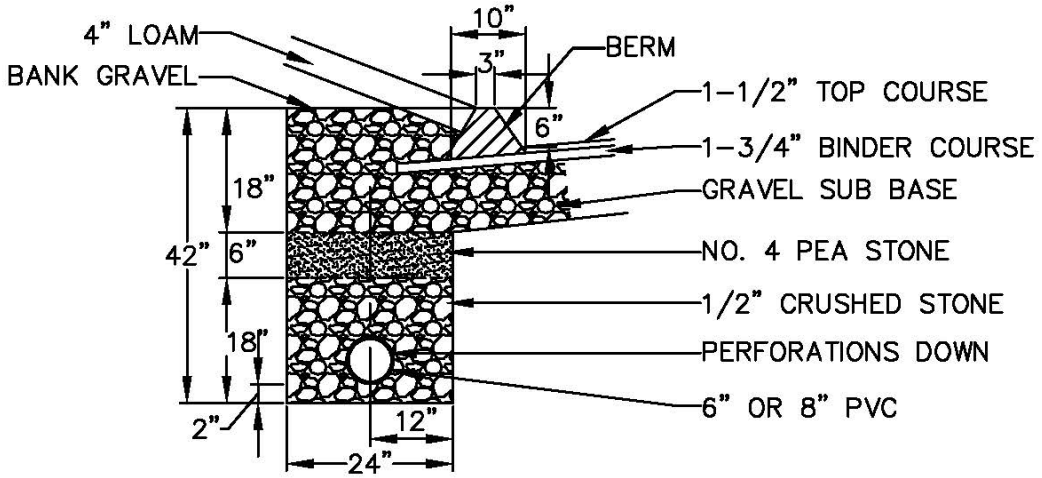

TYPICAL SUB-DRAIN DETAIL BEHIND ASPHALT BERM

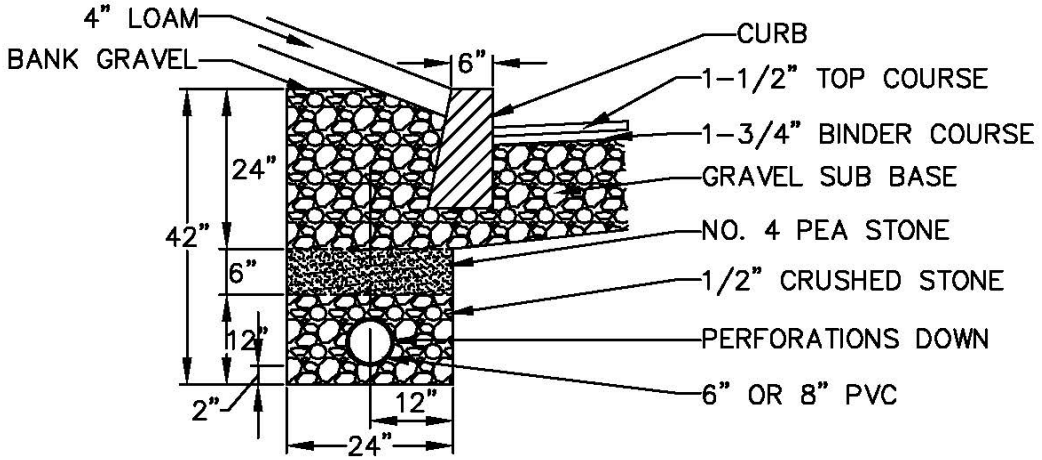

TYPICAL SUB-DRAIN DETAIL BEHIND GRANITE CURB

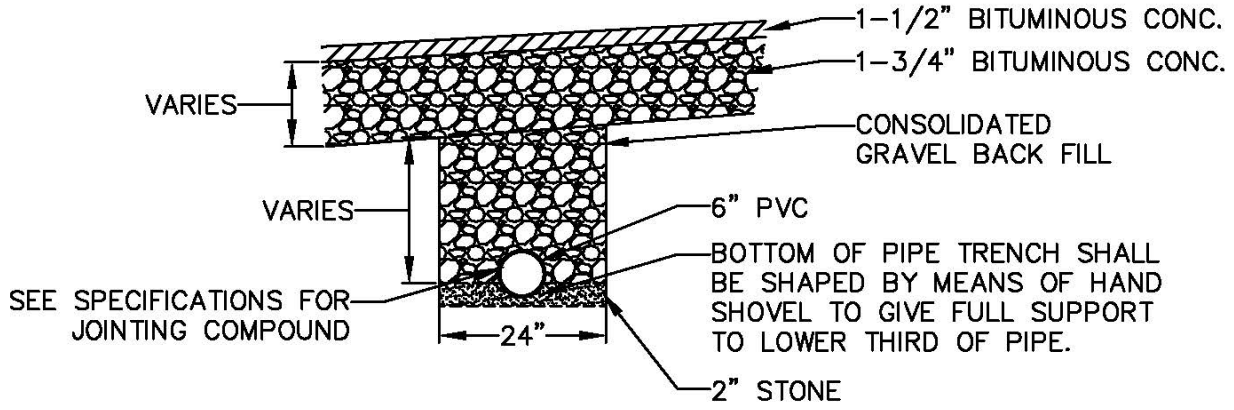

TYPICAL SUB-DRAIN DETAIL

Figure 1

ITEM 261 REPAIR, REPLACE OR RELOCATE EXISTING DRAINS

A. *GENERAL*

The work to be done under this item shall conform to the applicable provision of Section 230, (MSSHB).

Payment for repairing or replacing existing drains will be made only when authorized by the Contracting Officer. No payment to the Contractor will be made for repairs due to damage caused by his men or machines.

Drains that do not have sufficient cover (4' minimum) when the final grade is determined shall be lowered and if necessary relocated as directed by the Contracting Officer.

B. *MEASUREMENT AND PAYMENT*

Payment under this item shall be complete in place by the linear foot, including supplying of all pipe, fittings and materials, including gravel backfill and labor, also handling of water and/or raw sewage.

ITEM 265 REMOVE AND DISPOSE OF EXISTING MANHOLE

A. *GENERAL*

The Contractor shall furnish all additional labor, materials and equipment required to remove and dispose of existing manholes as directed by the Contracting Officer. The work to be done under this item shall conform to the applicable provisions of Section 140, (MSSHB).

B. *MEASUREMENT AND PAYMENT*

The unit bid price per each shall be full compensation for all work required including salvage and delivery to the City's Department of Public Works and Parks – 1065 Millbury Street Yard of any castings as directed by the Contracting Officer.

SECTION 300 - WATER

ITEM 301 WATER MAINS

ITEM 301.01	**1" POLYETHYLENE TUBING**	**L.F.**
ITEM 301.015	**1" COPPER TUBING**	**L.F.**
ITEM 301.02	**2" COPPER TUBING**	**L.F.**
ITEM 301.04	**4" ZINC COATED CLDI PIPE**	**L.F.**
ITEM 301.06	**6" ZINC COATED CLDI PIPE**	**L.F.**
ITEM 301.08	**8" ZINC COATED CLDI PIPE**	**L.F.**
ITEM 301.10	**10" ZINC COATED CLDI PIPE**	**L.F.**
ITEM 301.12	**12" ZINC COATED CLDI PIPE**	**L.F.**
ITEM 301.14	**14" ZINC COATED CLDI PIPE**	**L.F.**
ITEM 301.16	**16" ZINC COATED CLDI PIPE**	**L.F.**
ITEM 301.18	**18" ZINC COATED CLDI PIPE**	**L.F.**
ITEM 301.20	**20" ZINC COATED CLDI PIPE**	**L.F.**
ITEM 301.24	**24" ZINC COATED CLDI PIPE**	**L.F.**
ITEM 301.30	**30" ZINC COATED CLDI PIPE**	**L.F.**
ITEM 301.36	**36" ZINC COATED CLDI PIPE**	**L.F.**
ITEM 301.50	**POLYETHYLENE WRAP FOR DI PIPE**	**L.F.**

A. ***SCOPE OF WORK***

The work under this section shall consist of furnishing and installing new water pipe of various sizes, complete with gaskets, accessories, appurtenances, coatings for installing or making alterations in existing water main systems. The work shall also include excavating, backfilling, chlorinating, testing for leakage and other steps as may be necessary for the construction of new sections of existing water main systems as specified herein, as shown on the plans, or as directed by the Contracting Officer.

B. ***MATERIALS***

1. **Ductile Iron Pipe**

Standards: Ductile iron pipe shall conform to AWWA C150 and C151, subject to the following supplemental requirements. The pipe shall be of the diameter as shown, AWWA C151 Class 52 for all sizes and Class 53 for all sizes of flanged pipe with threaded flanges. Pipe shall be supplied complete with rubber gaskets, follower rings and/or flanges as indicated in the Contract Documents. Any specials or other fittings shall be provided as specified under the contract plans. Joints shall conform to AWWA C111, cement linings to AWWA C104, fittings to AWWA C153 or C110.

Markings: All pipes shall be clearly marked with Manufacturer, Class, Date, Size, standard and zinc coating designation. Any other cast marks and other marks shall be in accordance with applicable Standards.

Laying Lengths: Pipe laying lengths shall be provided in standard pre-approved lengths with allowable trim pipe lengths in accordance with AWWA C151 and special shorter lengths provided as required by the Drawings.

Joint Design: Ductile iron pipe shall be furnished with push-on joints or push-on restrained joints. Restrained joints shall be AMERICAN Fast-Grip, Flex-Ring, Mega-Lug, Lok-Ring or per-approved equal. All shall conform to AWWA C111.

Lining: Interior surfaces of all ductile iron pipe, fittings, and specials shall be cleaned and lined at the pipe casting facility with a standard thickness cement mortar lining applied in conformity with AWWA C104. A thin asphaltic coating shall be applied over the cement lining as per ANSI/AWWA C104/A21.4 to assist in curing of the cement and prevent altering of water PH.

Coating: The exterior of ductile iron pipe shall be coated with a layer of arc-sprayed zinc per ISO 8179. The mass of the zinc applied shall be 200 g/m2 of pipe surface area. A finishing layer of asphaltic topcoat shall be applied to the zinc. The mean dry film thickness of the finishing layer shall not be less than 3 mils with a local minimum not less than 2 mils. The zinc coating system shall conform to ISO 8179-1 “Ductile iron pipes – External zinc-based coating – Part 1: Metallic zinc with finishing layer. Second edition 2004-06-01."

Polyethylene Wrap: All ductile iron pipe shall recieve a Polyethylene encasement that shall meet all the requirements for ANSI/AWWA C105/A21.5, *Polyethylene Encasement for Ductile Iron Pipe Systems*. Each pipe joint shall be covered with an 8 mil thick polyethylene sleeve that is 2 feet longer than the pipe joint. The sleeve shall cover the full length of the pipe joint, lap over 1 foot on each end of the adjoining pipe joints, and be secured with a minimum of two circumferential turns of pressure sensitive polyvinyl tape. Excess material should be neatly drawn up around the pipe barrel, folded into an overlap on top of the pipe, and held in place by means of pieces of pressure sensitive tape at approximately 5 foot intervals. After assembling the joint, the polywrap tube from the previously installed pipe shall be pulled over the joint and secured by the Contractor. The polywrap tube from the new joint shall be pulled over the first tube and secured by the Contractor to provide a double seal. This polyethylene wrap shall also be used for all point repairs or cut-in valves and shall include all couplings used for this work

Cast iron and ductile iron fittings and valves shall be completely wrapped in 8 mil thick polyethylene film with a minimum of a 1 foot overlap on each end and appropriately taped. Laps shall cover joints of adjoining pipe or fittings when installed. Also, the fire hydrant barrel, from the surface to the valve, shall be wrapped as specified herein. Any damaged areas in the polyethylene film shall be repaired by covering the area with a sheet of polyethylene film large enough to lap over the damaged area 1 foot minimum in any direction and appropriately taped. Extreme care shall be taken at service tap locations to insure that the tape extends beyond the corporation and onto the service line pipe by a minimum of 1 foot.

Prior to placing pipe in the trench, a cushion of approved materials shall be placed in the trench as required by, "Excavation, Trenching and Backfill." Backfill material shall be carefully placed on the pipe so as to avoid any damage to the polyethylene sleeve.

The Contractor shall use care to protect and preserve the polyethylene wrap around ductile iron water mains when installing service corporations. The required method is to wrap pipe tape around the pipe over the polywrap in the area to be tapped. The tap is to be made through the tape and polywrap. It is not necessary to remove and replace poly wrap. All exposed pipe, the corporation, and the first 3 feet of the service shall be wrapped and taped to achieve a complete seal. In addition, a sand envelope shall extend over and around the connection to a depth of 12 inches above the main.

2. **Polyethylene Tubing:**

   Polyethylene tubing shall conform to the latest revision of AWWA Standard C901, have a working pressure of 200 psi and shall meet the nominal size as shown on the plan. All tubing shall be copper tube size, meeting ASTM specifications D-1248, D-2239, and D-2737 and shall meet PE 3608 requirements.

3. **Copper Tubing:**

   Copper tubing shall conform to the requirements of ASTM-B88, Type K, “Annealed” (soft).

4. **Inspection:**

   All pipe and tubing shall be thoroughly inspected before being installed. All cracked or otherwise defective pipe shall not be laid but shall be removed immediately from the work, and new materials of acceptable quality shall be furnished at the contractor's expense.

5. **Bolts:**

   Bolts for all Flexible Couplings, Flanged and Mechanical Joints shall be high strength; low alloy steel bolts only, conforming to the latest revision of AWWA C111. Bolt manufacturers certification of compliance shall accompany each shipment.

C. *DESIGN AND CONSTRUCTION*

1. The minimum allowable size of any public water main shall be eight (8) inches in diameter unless otherwise approved by the Department of Public Works and Parks - Water Operations.
2. All water mains shall have a five (5) foot minimum and an eight (8) foot maximum depth of cover as measured from the top of the pipe to finish grade.
3. All pipes shall be thoroughly cleaned before being installed, and shall be kept clean until accepted in the finished work. The ends of all uncompleted lines shall be tightly closed with temporary plugs at all times when the pipe laying is not in progress, and no trench water or debris shall be permitted to enter the pipe.
4. The contractor shall furnish the necessary pumps and tools to handle any water encountered in the pipe trench, and shall maintain the trench in a satisfactory condition, free from water, during the laying of the pipe. The pipe, after being laid in place, shall not, under any circumstances, be used as a drainpipe for the trench. Pipe shall be set in accordance with manufacturer's recommendations. Pipe or fittings requiring cutting shall be beveled so that the cut end does not damage the gasket. Joint ends of pipe shall especially be kept clean.
5. All tees shall be three (3) way gated and all crosses shall be four (4) way gated, unless otherwise directed by the Contracting Officer.
6. Small depressions shall be excavated in the trench bottom to accommodate the pipe bells and to assure continuous support of the pipe.
7. When new mains are installed, the corporation stops shall be installed (dry tap) prior to the hydrostatic pressure test or as the Contracting Officer directs.
8. All work shall conform to Typical Trench Detail W-5 which is part of these specifications.

D. *DISINFECTION*

1. Disinfection shall be in accordance with the latest revision of AWWA Standard 651 Disinfecting Water Mains. Precautions shall be taken to protect pipe interiors, fittings, and valves against contamination during construction. The water main shall be flushed prior to disinfection except when the tablet method is used.
2. The disinfection shall be accomplished by pumping a chlorine solution into the pipes by using the continuous feed method of disinfection. The initial chlorine dose concentration shall be 25 mg/l with a free chlorine residual of not less than 10 mg/l after a 24-hour holding period. After the retention period, the chlorinated water shall be flushed from the main until chlorine concentrations in the water leaving the main are no higher than that generally prevailing in the distribution system.
3. The tablet method of disinfection shall not be used without the expressed approval of the Contracting Officer.
4. After final flushing and before the new water main is placed in service, two (2) consecutive sets of acceptable samples, taken at least 24 hours apart, and shall show the absence of coliform bacteria. At least one (1) set of samples shall be collected from the new main. All samples shall be tested for bacteriological quality and be collected from every 1,200 feet of new water main plus one (1) set from the end of the line and at least one (1) set from each branch. All samples shall be collected by DPW&P at no charge to the contractor. No hose shall be used in the collection of samples.
5. If initial disinfection fails to produce satisfactory bacteriological results, the new main shall be re-flushed and shall be re-sampled. If these check samples also fail to produce acceptable results, the main shall be re-chlorinated until satisfactory results are obtained. When check samples are taken, it is advisable to sample water entering the new main also.
6. The environment to which the chlorinated water is to be discharged shall be inspected. If there is any question that the chlorinated discharge will cause damage to the environment, then a neutralizing chemical shall be applied to the water to be wasted to neutralize thoroughly the chlorine residual remaining in the water. Where necessary, Federal, State and local regulatory agencies should be contacted to determine special provisions for the disposal of heavily chlorinated water. The contractor

shall be responsible for the proper disposal of all heavily chlorinated water at no cost to the City. Any temporary connection to the main or other facilities required to accomplish the chlorination as just described shall be at the contractor's expense. Any temporary connections shall be properly abandoned as determined by the Contracting Officer at no cost to the City.

E. *HYDROSTATIC TESTING*

1. Hydrostatic Testing shall be in accordance with the latest revision of AWWA Standard C600, Installation of Ductile-Iron Water Mains and their Appurtenances.
2. Hydrostatic pressure test shall be made at 1.5 times the working pressure but not less than 150 psi for a period of not less than 2 hours (see exception for fire systems below and Section E paragraph 7 per NFPA 24). The working pressure shall be based on the static pressure at the lowest point of the line or section under test. The test pressure shall not vary by more than 5 psi plus or minus for the duration of the test.
3. If permanent air release valves are not located at all high points, the contractor shall install temporary connections as necessary to expel any air in the line. All temporary connections shall be removed and plugged as directed by the Contracting Officer at no cost to the City. When hydrants are in the test section, the test shall be made against the closed hydrant.
4. A leakage test shall be conducted concurrently with the pressure test. No pipe installation will be acceptable if the leakage is greater than the allowable leakage as determined by the formula listed in the above-referenced AWWA Standard. Leakage shall not be measured by a drop in pressure in a test section over a period of time.
5. If any test of laid pipe discloses leakage greater than that specified, the contractor shall, at no cost to the City, locate and repair defective material until leakage is within the specified allowance.

F. *SPECIAL CONDITIONS*

1. If requested by the contracting officer the contractor shall return all existing valves and valve boxes removed under normal excavation to the Millbury Street Yard (formerly Ballard Street Yard) at no additional cost to the City.
2. Unless otherwise specified the existing pipe shall be removed and the new pipe installed within the same trench. The existing water pipe to be removed shall become the property of the contractor and shall be properly disposed of at **no** additional cost to the City.
3. Where a main is going to be abandoned in place, as specified on the plans, the service and valve boxes shall be removed and stacked at the 1065 Millbury Street at no cost to the City if requested by the contracting officer.
4. During the cutting of tees, crosses, valves; the installation of tapping sleeves and the repair of leaks and breaks, sanitary construction practices shall be followed so there is no contamination of the new or existing water main with foreign material or groundwater. Any and all pipe, valves, couplings, and fittings used as listed above shall be disinfected as outlined in the latest revision of ANSI/AWWA Standard C651 for Disinfecting Water Mains.
5. All dedicated fire protection/fire sprinkler pipes shall be hydrostatically pressure tested in accordance with the latest revision of National Fire Protection Association standard, NFPA 24. Hydrostatic test shall be made at not less than 200 psi or 50 psi above static pressures in excess of 150 psi for two (2) hours. A typical “Contractor’s Material and Test Certificate for Private Fire Service Mains” shall be submitted to the Worcester Fire Department upon successful completion of all work, inspections and tests.
6. Where CDF (controlled density fill) is used, care shall be taken to avoid any contact between the CDF and pipe or fitting surfaces either by the use of approved polywrap around the pipe, gravel fill encasing all metallic surfaces to a depth of at least 6” above pipe surfaces or a combination of these methods as directed by the contracting officer.

G. *MEASUREMENT AND PAYMENT*

1. Water Mains, Copper and Polyethylene Tubing shall be measured complete in place along the axis of the pipe excluding the length occupied by valves and fittings.
2. Water Mains, Copper and Polyethylene Tubing including fittings, shall be paid for at the Contract Unit Price under the respective items for the kind of work involved, as set forth in the Proposal, which price shall include all pipe, excavation less than 7 feet in depth, backfill, compaction, disposal of all waste material from the excavation, tools, materials, disinfection, sheeting, shoring, successful hydrostatic and leakage tests, labor and equipment necessary to complete the work as specified herein.
3. Any excavation beyond the standard trench (see detail W-5) shall be compensated under excavation pay item “122 Earth Excavation below normal grade”. Likewise any excavation, as directed by the Contracting Officer, which results in a “dry” hole, also referred to as “outside excavation” shall also be compensated under item 122.
4. Polyethylene wrap for ductile iron pipe shall be paid per linear foot of water main installed where needed, in addition to the price per foot for the ductile iron pipe.

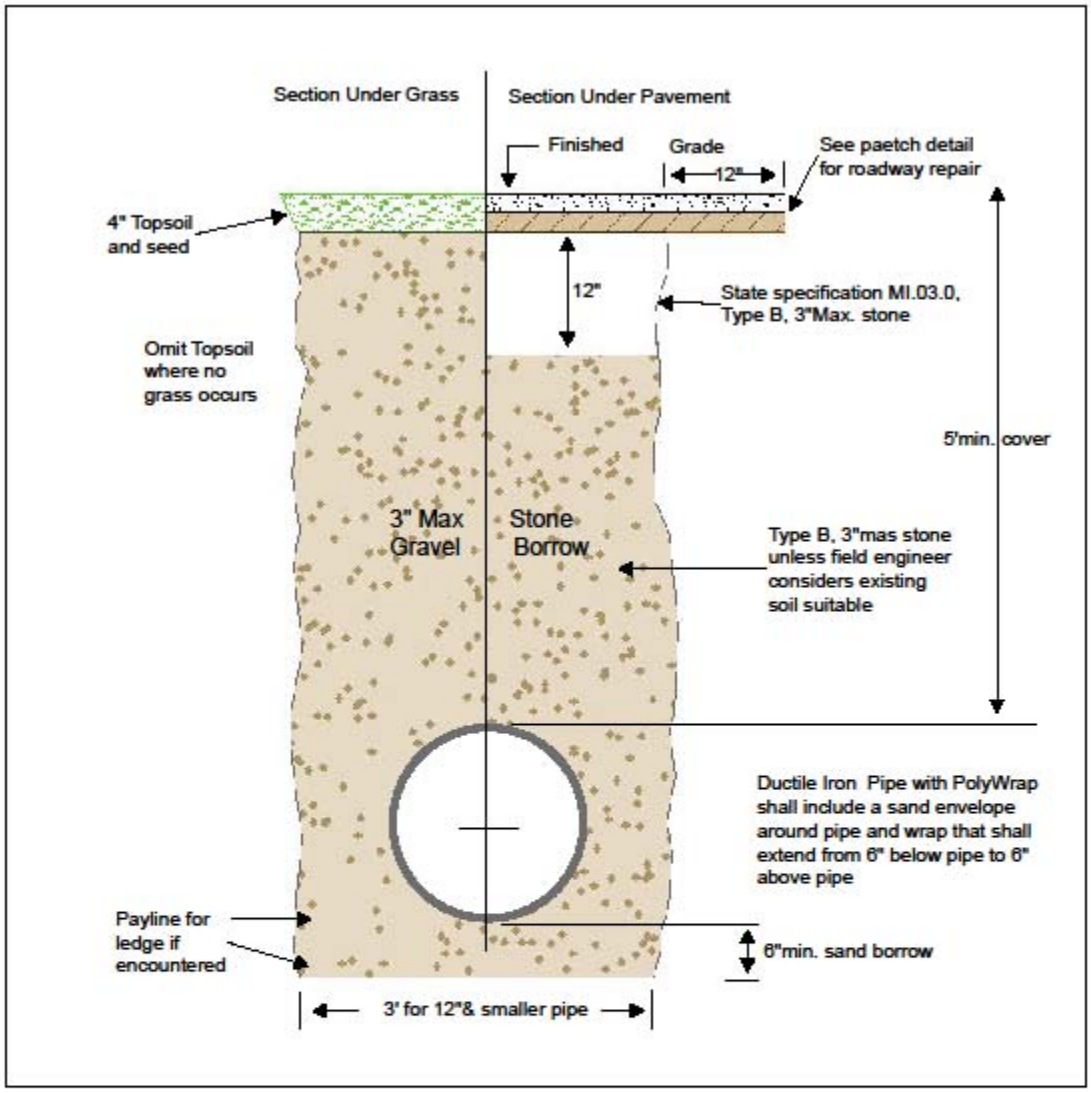

Trench Detail Typical	Rev. No.	By	Date
	1	M.F.J	1/24/79
	2	A.V.C.	4/13/93
	3	A.C.M.	4/1/05
City of Worcester DPW&P Water Operations	Drawn By: R.H.		Detail W-5
	Checked By: M.E.D.		
	Last update 2/3/2020		

ITEMS 302 and 303 CAST OR DUCTILE IRON FITTINGS

ITEM 302.1	**CAST OR DUCTILE FITTINGS**	**LBS.**
ITEM 302.0804	**8”X4” CUT-IN TEE**	**EA.**
ITEM 302.0806	**8”X6” CUT-IN TEE**	**EA.**
ITEM 302.0808	**8”X8” CUT-IN TEE**	**EA.**
ITEM 302.1208	**12”X8” CUT-IN TEE**	**EA.**
ITEM 302.1212	**12”X12” CUT-IN TEE**	**EA.**
ITEM 302.1408	**14”X8” CUT-IN TEE**	**EA.**
ITEM 302.1608	**16”X8” CUT-IN TEE**	**EA.**
ITEM 302.1612	**16”X12” CUT-IN TEE**	**EA.**
ITEM 303.0808	**8”X8” CUT-IN CROSS**	**EA.**
ITEM 303.1208	**12”X8” CUT-IN CROSS**	**EA.**

A. ***SCOPE OF WORK***

The work under this section shall consist of furnishing and installing cast iron or ductile iron fittings including bends, elbows, tees, plugs, reducers, flexible couplings where required, sleeves and other accessories in new or existing water mains, as shown on the plans, or as directed by the Contracting Officer.

B. ***MATERIALS***

All fittings for use with cast iron or ductile iron pipe shall conform to the latest revisions of AWWA C110 (gray and ductile iron standard fittings) or AWWA C153 (ductile iron compact fittings). All fittings shall be cement lined in accordance with the latest revision of AWWA C104 and shall have mechanical joints in accordance with the latest revision of AWWA C111. The ductile iron compact fittings shall be marked in accordance with Sec. 53-10 which states that the fittings shall have distinctly cast on them the identity of this standard, C153; the pressure rating, 350 psi; nominal diameter of openings; manufacturer’s identification; the country where cast; the letters “DI” or word “Ductile;” and the number of degrees or fraction of the circle on all bends.

All fittings shall be thoroughly inspected before being installed; all cracked or otherwise defective fittings shall not be laid but shall be removed immediately from the work and new materials of acceptable quality shall be furnished at no cost to the City.

Mechanical joint restraint shall be incorporated in the design of the follower gland and shall include a restraining mechanism which, when actuated, imparts multiple wedging action against the pipe, increasing its resistance as the pressure increases. This fitting shall be “Mega lug” or equal.

Flexible couplings shall be Dresser style or an approved equal. An approved tar coating shall be applied on the entire outer surface of such couplings including bolts when installed. **Bolts shall have a factory-applied epoxy coating.**

Bolts for all Flexible Couplings, Flanged and Mechanical Joints shall be high strength; low alloy steel bolts only, conforming to the latest revision of AWWA C111. Bolt manufacturer’s certification of compliance shall accompany each shipment.

C. ***DESIGN AND CONSTRUCTION***

Fittings, which are furnished and installed in the normal course of constructing new water mains, shall conform to all applicable provisions of these specifications.

Tees, which are to be furnished and installed in existing water mains, will be known as Cut-in Tees, and construction shall also conform to all the applicable provisions of these specifications. In addition, the work of Cut-in Tees shall include the cutting of the existing pipe to be connected to the run and the branch, and furnishing and installing all necessary items to successfully accomplish the work including the tee, nipples, couplings, sleeves, and accessories as required. When cutting in a tee to a water main, measurements must be taken to insure close tolerances between existing pipe and pipe nipple. If the tolerance is, in the opinion of the Contracting Officer, too large, a ring section shall be cut and installed on one side to make up the difference in length.

The contractor shall install permanent blocking under any cut-in tee or cross and under any valve or fitting installed to prevent any movement or settlement of the valve or fitting during backfilling and compaction.

D. ***MEASUREMENT AND PAYMENT***

Fittings will be measured by the pound and the quantity to be paid for shall be the cast iron weight stated in latest revision of AWWA Specification C110, or the manufacturer's rated weight, as listed in the catalog, whichever is the lesser. The Contractor shall furnish a copy of the manufacturer's catalog at the start of the work.

The weight of glands, bolts, gaskets, restraints and other iron fitting accessories will not be included for measurement and payment.

Cut-in Tees and Crosses will be measured per Each completely installed and in place.

Fittings will be paid for at the Contract Unit Price as set forth in the Proposal which price shall include full compensation for furnishing all labor, materials, restraint fittings or rodding, tools, equipment, and incidentals for doing all the work involved in furnishing and installing iron fittings complete in place as specified herein.

The work necessary to install a Cut-in Tee or Cross on an existing water main shall include all pipes, nipples, couplings, sleeves, accessories, the tee or cross, excavation less than 6 feet in depth, backfilling, compaction, sheeting, shoring, tools, equipment and labor. This work shall be paid for only under the item of Cut-in Tee or Cross. Under no circumstances will any of the work under this item be compensated by other pay items.

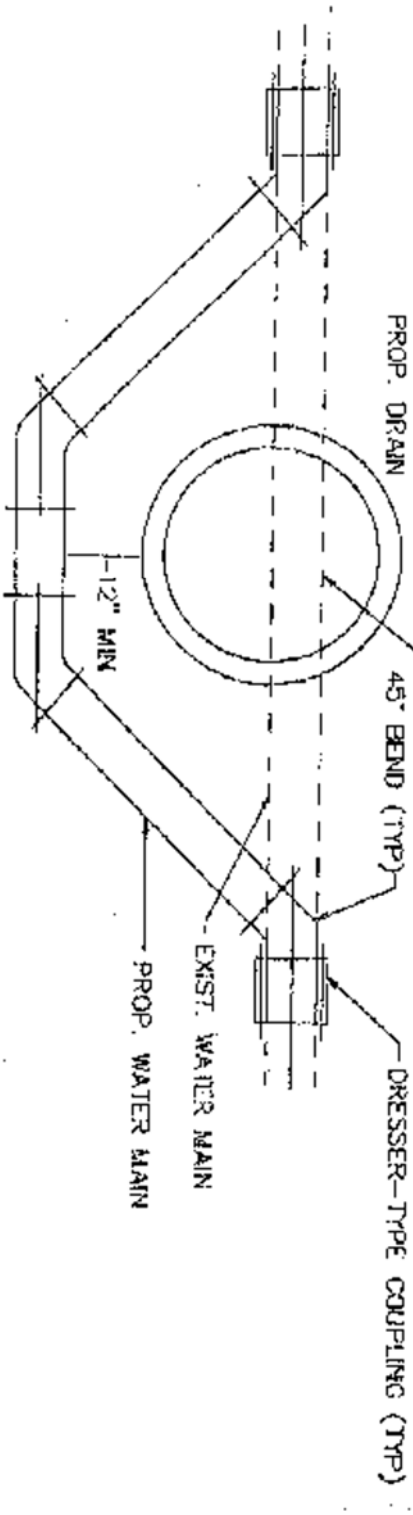

TYPICAL WATER MAIN OFFSET

NTS

ITEMS 304 through 308 VALVES AND VALVE BOXES

The work under this section shall consist of furnishing and installing new valves in new water lines, new valves in existing water lines, furnishing and installing new or removing and stacking valve boxes in water lines, adjusting gate boxes in street, adjusting service boxes (curb stops) in sidewalk area as specified herein, as shown on the plans, or as directed by the Contracting Officer.

ITEM 304.01 VALVE BOX EA.

ITEM 304.02 SERVICE BOX EA.

ITEM 304.03 ADJUST CURB STOP TO GRADE EA.

A. ***MEASUREMENT AND PAYMENT***

Adjusting curb stops will only be considered for payment when an extension rod is furnished and installed by the Contractor or if a repair is requested by the Contracting Officer.

ITEM 304.04 REPLACING 4" - 12" GATE VALVE BOX, GRAVEL BASE{}

ITEM 304.05 REPLACING 4" - 12" GATE VALVE BOX, RIGID BASE

A. ***SCOPE OF WORK***

The work to be done under Items 304.04 and 304.05 shall conform to the applicable provisions of MHD, Section 301 and Items 304.08 and 304.09 of the contract. The work shall consist of the supply and replacement of existing 4" through 12" gate valve box with a three-piece slip type valve box #6855 series with flange at bottom manufactured by Tyler Corporation with the cover to read "water" or approved equal. This work shall include furnishing all necessary labor, materials and equipment, backfilling with bituminous concrete, power tamped in 6" layers, set to designated line and grade, operating the gate nut to the satisfaction of the Contracting Officer and patching the base course with SUPERPAVE binder course without extra cost to the City. The contractor will also be required to return all old water castings to the Department of Public Works and Parks, 1065 Millbury Street, unless otherwise directed by the Contracting Officer. All valve boxes shall be set in bituminous concrete. The bituminous concrete shall extend a minimum 18" beyond the outside of the valve box to a depth of 12" so the area can be packed with a plate compactor.

As part of this work, each valve box and riser will be cleaned of soil and debris with an “air-lance” or equivalent, to accommodate the proper access to the valve. This work will be completed at no additional cost to the City.

B. ***MEASUREMENT AND PAYMENT***

Measurement shall be at the number of units furnished and installed in place and paid for at the unit price for each bid therefore in the proposal. No additional payment will be made for bituminous concrete used in this item (only when the City of Worcester cannot supply said boxes, will this item be used).

ITEM 304.06 REMOVE AND RETAIN WATER BOX{}

ITEM 304.07 RETURN AND RESET WATER BOX

A. ***SCOPE OF WORK***

The work to be done under Items 304.06 and 304.07 shall conform to the applicable provisions of MHD, Section 301 and Items 304.08 and 304.09 of the contract.

Under Item 304.06 the contractor will remove all top boxes from the roadway prior to the excavation and store such boxes in a manner to insure their safe keeping from theft or damage. Also it will be the Contractor's responsibility to protect the bottom box from clogging, misalignment and damage and to preserve its location for use after the SUPERPAVE bituminous concrete binder course base has been laid. Any bottom boxes that are within 15 inches of finish grade shall be trimmed down by hand to insure that the excavation equipment will not contact any part of said box or any buried covers. All excavated areas shall be suitably backfilled by approved compaction methods and the work site shall be left in a neat and clean state.

Under Item 304.07 the Contractor shall return to the job site all undamaged top boxes and covers previously removed under Item 304.06. It will be the contractor's responsibility to then reset the top boxes as indicated in the specifications of Items 304.08 & 304.09 of the contract, taking care as to the clearing of all debris from the bottom box and to successfully operate each gate valve to the satisfaction of the Contracting Officer. It will be the Contractor's responsibility to neatly trim or cut the new binder course, excavate, compact and repave the excavated area with SUPERPAVE bituminous concrete binder. Water boxes shall be adjusted to specific line and grade given by the Contracting Officer and shall be set prior to the laying of the top course.

As part of this work, each valve box and riser will be cleaned of soil and debris with an “air-lance” or equivalent, to accommodate the proper access to the valve. This work will be completed at no additional cost to the City.

B. ***MEASUREMENT AND PAYMENT***

Measurement shall be at the actual number of water boxes removed and retained and returned and reset as applicable. Payment shall be at the respective item bid for each in the proposal.

ITEM 304.08 WATER BOX ADJUST TO GRADE, GRAVEL BASE{}

ITEM 304.09 WATER BOX ADJUST TO GRADE, RIGID BASE

ITEM 304.10 LOWER STREET SERVICE BOX EA.

A. ***SCOPE OF WORK***

The work under Items 304.08 and 304.09 shall conform to the relevant provisions of MHD, Section 301 supplemented by the Materials section below.

B. ***CONSTRUCTION METHODS***

The pay item for this work shall be Water Boxes Adjust to Grade and shall be full payment for all excavation, trimming or cutting of existing box, bituminous concrete backfill, and placing SUPERPAVE bituminous concrete binder course collar for all labor, equipment, tools and incidental expenses required to locate, maintain in proper working order, and set to finished grade complete in place.

Water boxes shall be adjusted to line and grade before the top course has been laid. The bituminous concrete binder course shall be thoroughly compacted with a plate compactor.

It shall be the Contractor's responsibility to mark locations of each box and to maintain each and every box in proper working order, free of all dirt and/or debris and in true alignment at all times.

The Contractor shall notify the Contracting Officer immediately of any boxes found in poor, broken or leaking condition. The locations given at start of work in each street shall be preserved by the contractor for use in establishing water box locations after SUPERPAVE base course has been laid. The Contractor shall be responsible for location of all water boxes at all times during the construction period.

All valve boxes shall be set in bituminous concrete binder. The bituminous concrete shall extend a minimum of 18" beyond the outside of the valve box to a depth of 12", and compacted in two 6" lifts with a plate compactor.

Gate boxes and service boxes shall be carefully fitted together and to the valve with minimum overlap of six (6) inches between the box sections when in the most extended position. The soil shall be firmly compacted around bonnet of the valve to prevent settling. The bottom of the lower section shall enclose the stuffing box and operating nut of the valve. The valve box shall be securely held vertical and plumbed straight during backfilling. Covers shall be set to the specified line or grade as directed by the Contracting Officer.

Gate boxes and service boxes that are removed and stacked shall remain the property of the City of Worcester, DPW&P, Water Operations. The Contractor shall deliver, unload and store said gate and service boxes at the 1065 Millbury Street.

The Contractor shall adjust all existing gate and service boxes where indicated on the drawings and detail sheets. When adjusting a water box, the Contractor shall be responsible to clear all debris from the bottom box and to successfully operate each gate and valve to the satisfaction of the Contracting Officer.

Some gate and service boxes that are called out to be adjusted may not be able to be adjusted as described above. There may be grade changes that exceed the range of adjustment within the existing box; or the top and bottom sections of the existing box have been fused together due to age and corrosion and cannot be separated or there may be damage to the box sections that is not visible from the surface. If one or more of these conditions exists, the Contracting Officer may deem it necessary to remove and stack the existing box and a new gate or service box will be installed. The contractor shall make every effort to separate the sections of the existing box to be adjusted prior to the Contracting Officer allowing the removal and stacking of the existing box.

Valve and service boxes shall be trimmed and/or cut with an abrasive pipe saw only. The use of hammers and wrenches to hand trim the boxes shall not be allowed.

On all water services that have an existing curb stop or have a curb stop and service box installed without the changing of the service pipe the 4 inch service box over the corporation stop shall be adjusted as follows:

The 4 inch service box shall be adjusted to 18 inches below finish grade unless a cement concrete road base exists, in which case the service box shall be set in the finished grade of the cement concrete road base. If the Contracting Officer determines that the 4 inch service box to be adjusted is not suitable for re-use, the contractor will remove and stack the existing gate box and a new gate box will be set.

C. ***MEASUREMENT AND PAYMENT***

Gate boxes and service boxes that are set, removed and stacked or adjusted shall be paid for at the contract unit price per each complete in place. All equipment, tools, Superpave bituminous concrete binder course materials, labor and transportation required to complete all of the above items as specified shall be considered as incidental to the construction and be included in the contract price per each item.

Under Items 304.10 payment will exclude the cost of a casting. The City of Worcester, DPW&P, Water Operations will furnish the new 4 inch service box when necessary and the contractor shall pick up said boxes at the 1065 Millbury Street at no additional cost to the City.

Measurement shall be for work completed in place and paid for at the unit price each bid therefore in the proposal. No additional payment will be made for bituminous concrete used in this time.

ITEM 305.02	**2" BALL VALVE**	**EA.**
ITEM 305.04	**4" GATE VALVE**	**EA.**
ITEM 305.06	**6" GATE VALVE**	**EA.**
ITEM 305.08	**8" GATE VALVE**	**EA.**
ITEM 305.10	**10" GATE VALVE**	**EA.**
ITEM 305.12	**12" GATE VALVE**	**EA.**
ITEM 306.06	**6" CUT-IN GATE VALVE**	**EA.**
ITEM 306.08	**8" CUT-IN GATE VALVE**	**EA.**
ITEM 306.12	**12" CUT-IN GATE VALVE**	**EA.**
ITEM 307.14	**14" BUTTERFLY VALVE**	**EA.**
ITEM 307.16	**16" BUTTERFLY VALVE**	**EA.**
ITEM 307.18	**18" BUTTERFLY VALVE**	**EA.**
ITEM 307.20	**20" BUTTERFLY VALVE**	**EA.**
ITEM 307.24	**24" BUTTERFLY VALVE**	**EA.**
ITEM 307.30	**30" BUTTERFLY VALVE**	**EA.**
ITEM 307.36	**36" BUTTERFLY VALVE**	**EA.**
ITEM 307.40	**40" BUTTERFLY VALVE**	**EA.**
ITEM 307.48	**48" BUTTERFLY VALVE**	**EA.**
ITEM 308.16	**16" CUT-IN BUTTERFLY VALVE**	**EA.**

A. ***MATERIALS***

All valves **12 inches and less** and all tapping valves shall be gate type resilient-seated style and shall meet or exceed the minimum materials and performance requirements of the latest revisions of the applicable AWWA StandardsC-509 and C515 for resilient-seated. Both ends shall be mechanical joint in accordance with the latest revisions of AWWA C-111 except tapping valves where the outlet end will be mechanical joint.

Design Pressure: The design of the water gate valves as described below shall be based on an internal hydrostatic pressure (working water pressure) of 200 psi.

Stem: Resilient-seated gate valve stems shall be non-rising design, grade E bronze with a yield strength of not less than 32,000 psi. and an elongation of not less than 10 percent in 2 inches, or stainless steel AISI Type 420, 304, or 316. The 300 series stainless steel shall be strain-hardened to meet the physical requirements referenced above.

Resilient-Seated Disc Wedge: The resilient-seated disc wedge shall be fully (100%) encapsulated in rubber. The rubber shall be securely bonded to the wedge, including the part which houses the stem nut. The stem hole through the wedge shall be full opening top to bottom and shall also be covered with rubber. Disc wedges that are not 100% fully encapsulated shall not be acceptable.

Bolting: All resilient-seated gate bonnet bolts, seal or gland plate bolts, stuffing box bolts or any other bolts with threads exposed to the environment shall be type either 304 stainless steel, everdur bronze, cadmium-plated (ASTM B766), or zinc-coated (ASTM A153 or ASTM B633).

Tapping Valves: All tapping valves shall be furnished with the tapping flange having a raised face or lip designed to engage the corresponding recess in the tapping sleeve flange in accordance with MSS-SP60. Tapping valves without the raised face shall not be allowed because they do not assure the proper alignment required to prevent damage by a misaligned shell cutter. The interior of the waterway in the valve body shall be a full opening capable of passing a full-sized shell cutter equal to the nominal diameter of the valve.

Country of Origin: To insure compliance with AWWA and other applicable standards, and access to manufacturing facilities for inspection purposes, and assure timely shipment and delivery, all gate type valves shall be manufactured, assembled, and tested in plants located within the continental United States.

All valves 14 inches and over shall be butterfly type and shall meet or exceed AWWA Standard C504 as latest revised, and shall comply with the specific requirements and design standards that follow.

Design Pressure: The design of the water butterfly valves as described below shall be based on an internal hydrostatic pressure (working water pressure) of 200 psi.

Body Type: All butterfly valves shall be of the rubber seated tight-closing type. Both ends shall be mechanical joint per AWWA Standard C111 as latest revised. All accessories (bolts, glands, and gaskets) required to make up two (2) mechanical joints shall be supplied in boxes by the vendor. The rubber seat shall be a full circle 360 degrees seat not penetrated by the valve shaft.

Valve: Bodies of all valves shall be either of cast iron conforming to ASTM A126, Class B, or ASTM A48, Class 40; of ductile iron conforming to ASTM A536, Grade 65-45-12; or of alloy cast iron conforming to ASTM A436, Type 1 and 2, or ASTM A439, Type D2, with a maximum lead content of 0.003%.

Valve Seat: The valve seat rubber shall be Buna-N rubber. If the valve seat rubber is on the disk it shall be held mechanically in place with a stainless steel clamp ring and mate with a stainless steel body ring mechanically held in place. If the valve seat rubber is on the valve body, it shall not be glued in place but it shall be held in place without hardware.

Actuator: The actuator is essentially an integral part of a butterfly valve. Actuator shall be totally enclosed and fully greased-packed for buried, submerged service up to 25 feet of head. It shall be capable of withstanding an overload input torque of 450 ft. lbs. at full-open or full-closed position, without damage to the valve or valve operator. Number of turns to operate valve shall closely resemble conventional distribution valve practices and to minimize water hammer. Actuators shall be built in full conformance with AWWA Standard C504, Class 150b as latest revised.

Testing: Shall be in compliance with AWWA C504 Section 5 as latest revised.

Performance Testing: Each valve with the actuator mounted directly on the valve shall be shop-operated three (3) times from the fully closed to the fully opened position and the reverse under a no-flow condition to demonstrate that the complete assembly is workable.

Leakage Tests: Each valve shall be shop-tested for leaks with the disc in the closed position at 200 psi.

Hydrostatic Test: All valve bodies shall be subjected to an internal hydrostatic pressure equivalent to two (2) times the rated pressure.

All gates (including tapping valves) and butterfly type valves shall be spray coated with a two-component epoxy to cover all interior ferrous surfaces that come in contact with water. The constituents of the cured film shall be non-hygroscopic, non-water soluble, and FDA approved for exposure to fluids for human consumption. Surface preparation shall be blast cleaned or other approved method to near white metal. All metal surfaces shall be cleaned to remove all dirt, dust, mill grade, rust, corrosion products, oxides, paint or any other foreign matter. Blast cleaned surface shall be protected from conditions of high humidity, rainfall or surface moisture. No surface shall be allowed to flash rust before coating. The coating shall be applied to a minimum thickness of 8

mils. All holidays in the coating shall be repaired by the application of another coat of epoxy over the area. The body and ferrous vane shall then be 100% checked on the water-wetted surfaces to be electronically void-free.

All resilient gate valves (including tapping valves) shall have a fusion-bonded epoxy coating applied to and fully cured on all interior and exterior ferrous surfaces that are in constant contact with water. Coating shall meet or exceed the minimum materials and performance requirements in AWWA C550 latest revisions. The coating shall be a minimum of 10 mils thickness, and shall be shown to be holiday-free when tested with a low-voltage holiday detector, using a sponge saturated with a 1/2 percent by weight sodium chloride solution.

Certificates of Compliance: A certificate of compliance from the manufacturer stating that the valve, stem, operator and coating meets all criteria set forth in this specification shall be submitted and approved before installation of any valve. The certificate must be signed by an authorized company official and notarized by a notary public.

All valves, except 2 inch, shall be fitted with a standard 2 inch square operating nut and shall **open right (clockwise)**.

Valve boxes shall be cast iron two- (2) piece slip type having an extension range of 40 inches to 61 inches, with the flange located at the **bottom** of the top section. Gate box extension sections shall have an extension range as listed below.

Top Section: This section shall be 26 inches in length with a minimum internal diameter of 6-1/8 inches. A flange shall be located at the bottom of the section and the flange shall have a minimum diameter of 9 inches.

Bottom Section: This section shall be 36-inches in length with a minimum internal diameter of 5-1/4 inches. The lower portion of this section shall be bell-shaped to accommodate the operating nut and packing assembly of the valve it will be set on. The minimum internal diameter of the bell-shaped portion shall be 8 inches and the minimum height of the bell-shaped portion shall be 6-1/2 inches.

Intermediate Extension Section: This section shall be 18 inches in length with an extension range up to 14 inches. The section shall have a minimum internal diameter of 5-1/4 inches.

Gate Box Cover: The cover shall be cast iron with the word “WATER” cast into the cover. The cover shall have a minimum overall length of 3-1/2 inches.

Fixed or adjustable cast iron riser sections that are less than 5-1/4 inches in diameter and can be placed on or inserted inside the existing top section shall not be allowed.

Roadway Boxes to accommodate 2-inch valves shall be cast iron, two- (2) piece slip type with an arched base having an extension range of 49 inches to 62 inches.

Top Section: This section shall be a minimum of 18 inches in length with a minimum internal diameter of 5-7/16 inches. A flange shall be located at the bottom of the section and the flange shall have a minimum diameter of 8 inches.

Bottom Section: This section shall be a minimum of 27 inches in length with a minimum internal diameter of 4-1/4 inches. The lower portion of this section shall be an arched bell-shape to accommodate the 2-inch valve and 2-inch pipe it will be set over. The minimum width and the minimum height of the arch shall be 3-5/8 inches and 3-1/4 inches respectively. The minimum internal diameter of the bell-shaped portion shall be 7 inches and the minimum height of the bell-shaped portion shall be 6 inches.

Extension Section: This section shall be a minimum of 22 inches in length with an extension range up to 18 inches. This section shall have a minimum internal diameter of 4-1/4 inches.

Cover: The cover shall be cast iron with the word “WATER” cast into the cover. The cover shall have a minimum width and length of 5-7/8 inches and 1-9/16 inches respectively.

All 2-inch corporation valves shall be ball-type equal to or exceeding the quality of series FB1000 with tee head adapter (cc. thread x compression) as manufactured by Ford.

Bolts for all flexible couplings, flanged and mechanical joints shall be high strength, low alloy steel bolts only, conforming to AWWA C111 as latest revised. Bolt manufactures certification of compliance shall accompany each shipment.

CUT-IN VALVES: Valves of a given size to be cut-in to an existing line shall have the same pay item number followed by the words “CUT-IN”. A valve to cut-in shall meet the same specifications as valves of a similar size

but shall include cutting of existing pipe, removing existing valve, stacking existing pipe and valve at the Ballard Street Yard, dewatering the trench, the required tie-ins, pipe, couplings, accessories, other fittings, labor, equipment, materials, excavation, and backfilling as specified herein. Under NO circumstances shall any of the work under this item be compensated by other pay items.

VALVES REMOVED & RESET: An existing valve to be removed and reset for the purpose of cleaning & cement lining shall have the same pay-item number as other similar valves followed by "R&R". A valve to be removed & reset shall utilize the existing valve but shall include cutting of existing pipe, removing existing valve, stacking existing pipe and valve at the Ballard Street Yard, dewatering the trench, the required tie-ins, pipe, couplings, accessories, other fittings, labor, equipment, materials, excavation, and backfilling as specified herein. Under NO circumstances shall any of the work under this item be compensated by other pay items.

B. *DESIGN AND CONSTRUCTION*

All valves shall be installed at a maximum of 500 feet, unless otherwise directed by the Contracting Officer. All valves shall be set level. Each gate shall be tightly closed before being placed in line, and shall remain so until the joint on each side is completely made.

All valves shall be carefully handled to avoid shock or damage.

Proper installation of valve boxes helps ensure against operating difficulties in the future. The soil shall be firmly compacted around the bonnet of the valve to prevent settling. The bottom of the lower section shall enclose the stuffing box and operating nut of the valve. The valve box shall rest above the valve so the weight of traffic passing over the street will not be transferred to the pipe or valve.

Valve boxes shall be carefully fitted together and to each valve with a minimum overlap of six (6) inches between the box sections when in the most extended position. The valve box shall be securely held vertical and plumbed straight during backfilling. Covers shall be set to the finished grade as directed by the Contracting Officer. After the box is set, the contractor shall operate the valve or corporation stop to the satisfaction of the Contracting Officer.

During the course of water main construction and/or resurfacing of street, the contractor may have to adjust or remove and replace existing valve and service boxes. When adjusting a water box the contractor shall excavate the complete top section of the box, separate the top section from the lower or bottom section and raise or lower the top section to the specified line or grade. Some gate and service boxes that are called out to be adjusted may not be able to be adjusted as described above. There may be grade changes that exceed the range of adjustment within the existing box; the top and bottom sections of the existing box may be fused together due to age and corrosion and the sections cannot be separated or there may be damage to the box sections that is not visible from the surface. If one or more of these conditions exist, the Contracting Officer may deem it necessary to remove and stack the existing box and have a new valve or service box installed. The contractor shall make every effort to separate the sections of the existing box to be adjusted prior to the Contracting Officer allowing the removal and stocking of the existing box. The City shall supply new valve or service boxes to replace existing boxes that are not suitable for reuse only when the damaged box is on an existing public water main or service. **The City will not supply valve boxes for new construction or to replace damaged boxes that are on private water mains or services.**

Valve and service boxes that are removed and stacked shall remain the property of the City of Worcester D.P.W. Water Operations. The contractor shall deliver, unload and store said valve and service boxes at the City's Ballard Street Pipe Yard at no additional cost to the City.

Valve and service boxes shall be trimmed and/or cut with an abrasive pipe saw only. The use of hammers and wrenches to hand trim the boxes shall not be allowed.

Valves that are furnished and installed in existing water mains will be known as Cut-In Valves. The work of cut-in valves shall include the cutting of the existing pipe and furnishing and installing all necessary items to successfully accomplish the work.

All tees shall be three (3) way gated and all crosses shall be four (4) way gated unless otherwise directed by the Contracting Officer.

Water Operations shall check and clean all main gates needed for a shutdown before the contractor starts the work.

C. *MEASUREMENT AND PAYMENT*

Ball Valves, gate valves, butterfly valves, cut-in valves, valves removed & reset, tapping sleeves and valves, roadway boxes and valve boxes will be measured per Each as determined by actual count complete and in place.

Valves, cut-in valves, valves removed &reset, tapping sleeves and valves, ball valves, and boxes will be paid for at the Contract Unit Price as set forth in the Proposal which price shall include full compensation for furnishing all labor, materials, tools, equipment, and incidentals necessary to complete the work specified herein.

Payment for a cut-in valve, valves removed & reset, butterfly or gate type, on an existing line, shall include cutting of existing pipe, removing existing valve, stacking existing pipe and valve at the Ballard Street Yard, dewatering the trench, the required tie-ins, pipe, couplings, accessories, other fittings, labor, equipment, materials, excavation, and backfilling shall be paid only under the item of cut-in valve. Under NO circumstances will any of the work under this item be compensated by other pay items.

Payment for Adjusting Gate Box or Service Box to Grade shall include all excavation, concrete or asphalt collars to anchor the top box, labor, equipment, materials, delivering and unloading of any boxes deemed unsuitable for reuse at 1065 Millbury Street and any incidentals necessary to complete the work. Please note: Adjusting the valve box includes lowering or adjusting to any grade other than finished grade. Gravel, temporary and permanent patch, gate boxes, service boxes, and any other items needed for this work shall be paid for at the respective Contract Unit Price for that item.

ITEM 309 SERVICES AND SERVICE CONNECTIONS

ITEM 309.1 SERVICE CONNECTION EA.

ITEM 309.2 SERVICE BOX AND CURB STOP EA.

ITEM 309.3 SERVICE BOX AND CUT-IN CURB STOP (3/4" - 1") EA.

ITEM 309.4 SERVICE BOX AND CUT-IN CURB STOP (1 1/4" - 2") EA.

ITEM 309.5 SERVICE BOX AND CURB STOP 2" EA.

A. ***SCOPE OF WORK***

The work specified in this section includes the installation of new water service lines and the replacement of and the repair of existing water service lines as shown on the plans and specified herein.

B. ***MATERIALS***

All brass fittings shall conform to AWWA C800 as latest revised with a maximum lead content of 0.25 % by weight and shall be manufactured by Ford Meter Box Company or equal unless otherwise approved by the Director. The design of all brass fittings shall be based on a minimum internal hydrostatic pressure (working water pressure) of 200 psi

1. **Corporations:**

   For new taps one (1) inch FB1000 cc (AWWA) thread x pack joint (compression)

   For new taps 1-1/4 inch to 2 inch FB1000 with Tee Head Adapter cc (AWWA) thread x pack joint (compression)

   For replacement of existing corporations one (1) inch or less FB1100 IP thread x pack joint (compression)

   For replacement of existing corporations 1- 1/4 inch to 2 inch FB1100 with Tee Head Adapter IP thread x pack joint (compression)

2. **Curb Stops:**

   B44 Series full port pack joint x pack joint

3. **Couplings:**

   C44 Series - pack joint x pack joint

   C22 Series - flared joint x flared joint

All compression fittings shall be installed with solid tubular stainless steel internal insert stiffeners.

Service boxes shall be arch pattern rod type, with a one (1) inch diameter upper section, as manufactured by Quality Water Products, or approved equal. The service box shall adjust one (1) foot for proper height. The arch will accommodate up to one (1) inch ball curbs. The 36-inch rod shall be offset for centering in pipe and must be minimum 5/8" diameter. A brass cotter pin must be supplied with each rod. Rod shall be permanently attached to end yoke. The plug cover shall have a deep slot for the release of water and removal of debris. The brass pentagon plug shall have a coarse thread.

Polyethylene tubing shall meet the latest revision of AWWA Standard C901, have a working pressure of 200 psi, and shall meet the nominal size as shown on the plan. All polyethylene tubing shall be copper tube size (CTS), meeting ASTM specifications D-1248, D-2239, and D-2737 and shall meet PE 3608 requirements.

Copper tubing shall conform to the requirements of ASTM-B88, Type K, “Annealed” (soft).

All materials and construction shall conform to figures W-8A, W-8B, W-8C and W-8D which are part of these specifications.

C. *DESIGN AND CONSTRUCTION*

The minimum allowable size of any water service shall be one (1) inch.

All pipe and other appurtenance, on both fire and domestic service lines, from the public or private water main to the outlet side of the meter or to the main control valve immediately inside the foundation in case where meter pits are required shall conform to all City of Worcester DPW&P Standard Specifications and Details.

All service lines shall be tapped on or connected to a public water main on City property. No service line shall be connected to another service line without prior written approval from the Director of Water Operations. If one service line is allowed to be connected to another service line, the connection point and controlling valve shall be on City property.

All service lines, whether tapped on or connected to a public water main or another service line, shall be individually gated. This is to allow control of any one service line without affecting any other service line.

All individually owned units shall have separate water services installed a minimum of six (6) feet apart throughout their entire length.

Condominium and apartment-type developments shall be allowed one (1) adequately sized service.

All service lines shall be sized by the owner's architect or engineer.

All water services shall have a five (5) foot minimum and an eight (8) foot maximum depth of cover as measured from the top of the pipe to finish grade.

Contemplated services shall be allowed in order to minimize trenching in base paved streets, particularly in developments. If a contemplated service is not used by the developers or owner, that service shall be properly plugged at the main and curb stop box removed by the developer or owner.

Water service lines shall be installed straight and perpendicular from the water main to the foundation unless otherwise directed by the Contracting Officer. This will facilitate the easy locating of the service pipe in the future. Service lines shall be installed a minimum of ten (10) feet away from any sewer service.

All service lines greater than two (2) inches in size shall be even sized pipe.

All service lines between 1-1/4 inches and 2 inches in size shall be copper tubing.

All service lines greater than two (2) inches in size shall be ductile iron pipe as specified in Item 301 of these specifications.

All service lines shall be pressure tested, disinfected and bacteria tested as specified in Item 301, Section C. of these specifications.

When any water service runs under a concrete floor the pipe shall be installed inside an approved conduit. The size of the conduit shall be at least twice the diameter of the service pipe being installed. See figure W-8D.

All taps shall be made on the horizontal and a minimum of three (3) feet away from any joint or bell in the water main unless otherwise directed by the Contracting Officer.

All one (1) inch taps on cast or ductile iron mains 8-inch or greater in size shall be made by direct means only using cc (AWWA) thread corporations. A minimum of three full threads shall be required for one (1) inch corporation stop taps. If the minimum number of threads cannot be achieved, a service saddle shall be used.

All one (1) inch taps on cast or ductile iron mains between 2-inch to 6-inch in size shall be made with cc (AWWA) thread corporations using a service saddle.

All taps on PVC water mains shall be made using a service saddle.

All 1-1/2 inch and 2 inch taps made on mains less than 16 inches in diameter shall be made with cc (AWWA) thread corporations using a service saddle. All 1-1/2 inch and 2 inch taps made on mains 16 inches or larger shall be made by direct means using cc (AWWA) thread corporations.

All taps four (4) inches or greater in size shall be made as detailed in Item 311 of these specifications.

All lengths of polyethylene and copper tubing shall be joined by means of compression or flared fittings only. Joints below ground shall be kept to a minimum; ideally the service pipe shall be installed in one continuous length from the corporation stop to the curb stop and from the curb stop to the meter valve.

As a general rule, a curb stop and box shall be installed within the City right-of-way at or near the property line behind the sidewalk usually in the grass area. Curb stops and boxes shall not be located within the sidewalk unless directed by the Contracting Officer because of special or unique conditions. Curb stops boxes shall be supported by a flat brick or concrete block so that the weight of the traffic passing over the box will not be transferred to the valve or service pipe.

The Contractor shall be required to install new curb stops and service boxes on existing polyethylene and copper tube service lines with sufficient cover in sizes ranging from 3/4 inch through 2 inch. The pay items covering this operation shall be Item No. 308.3 “Service Box and Cut-In Curb Stop (3/4" - 1")” or Item No. 309.4 “Service Box and Cut-In Curb Stop (1-1/4" - 2").” Any 3/4" or 1" pipe used during the cutting in of any 3/4" or 1" curb stop shall be considered incidental to pay item 309.3 and shall be compensated for under pay item 309.3. Any 1-1/4", 1-1/2" or 2" pipe needed to cut-in any 1-1/4", 1-1/2" or 2" curb stop shall be supplied by the Contractor at no additional compensation to the Contractor. The Contractor is encouraged to reuse the existing service pipe whenever possible.

Polyethylene tubing shall be installed with enough slack to compensate for settlement and compaction.

When any service pipe is replaced, the contractor shall thoroughly rod out the existing corporation so that there are no obstructions and a full port of water is able to flow. The contractor shall then connect the changed service pipe to the existing corporation.

The changing of water service pipes 2-inch or less in size from an old water main to the new water main shall include the disconnecting of the service pipe from the old water main; the tapping of the new water main; the installation of the appropriate size corporation stop and the installation of a new copper or plastic gooseneck and fittings to reconnect the existing service pipe to the new water main. The minimum length of the service pipe or gooseneck used to connect the existing service pipe to the new corporation stop shall not be less than two (2) feet unless otherwise directed by the Contracting Officer. Payment for all service tubing installed during a service connection shall be made under pay items: 301.01, 1” Polyethylene Tubing; 301.015, 1” Copper Tubing or 301.02, 2” Copper Tubing, whichever is applicable.

The Contractor may be required to change, replace and/or lower existing water service pipes 2-inch or less in size on the City property only. All existing black iron or galvanized iron service pipes shall be replaced from the water main to the property line with the appropriate size polyethylene or copper water service tubing. If any existing water service is found to lack sufficient depth of cover the pipe shall be lowered to ensure a minimum of five (5) feet of cover. The existing service pipe shall be replaced with the appropriate size polyethylene or copper water service tubing and an appropriately sized curb stop and service box shall be set at the property line. The replacement and/or lowering of existing water service pipes shall be compensated for using pay items 301.01, 1” Polyethylene Tubing; 301.015, 1” Copper Tubing or 301.02, 2” Copper Tubing, whichever is applicable. Curb stops and service boxes installed as part of the replacing and/or lowering of water service pipes shall be compensated for using pay items pay item 309.2, Service Box and Curb Stop or pay item 309.5, Service Box and Curb Stop 2”, whichever is applicable.

All service pipes and water mains two (2) inch or less in size shall be installed on a bed of six (6) inches of moist sand borrow and backfilled with such sand, well compacted, to a level of one (1) foot above the crown of the service pipe. The remaining backfill from a point one (1) foot above the crown of the pipe to a point one (1) foot below finished grade shall be select common fill or gravel borrow as directed by the Contracting Officer.

The Contractor shall be required to lower the existing street service boxes whether during the changing of the existing service pipe; on existing service lines that have receive a Service Box and Cut-In Curb Stop or already have a curb stop and box in place. The pay item covering this operation shall be Item no. 304.10 "Lowering Service Box." (see previous section for detailed description) This will be done by removing the existing top box

and resetting it to the proper grade approximately 15” to 18” below finished grade unless a rigid road base exists in which case the box shall be set to finish grade of the rigid base. It shall be set in a plumb position over the corporation stop so that the corporation may be operated by a wrench. Gravel Borrow, where required, will be paid to the Contractor under its respective pay item. The Contractor shall be responsible for cleaning existing service boxes over corporation stops where needed. Compensation for this work shall be included as part of Item no. 304.10. When the Contracting Officer deems it necessary, the contractor shall pick up a new street service box for installation over an existing corporation to replace a broken box not suitable for reuse. The contractor shall pick up a street service box at 1065 Millbury Street using his copy of his water permit as a receipt to obtain the boxes. Street service boxes not suitable for reuse shall remain property of the City and shall be returned to the City's pipe yard.

The contractor shall operate the completely installed and backfilled curb stop in the presence of and to the satisfaction of the Contracting Officer. At this time the contractor shall flush the service to eliminate any foreign material that could clog the plumbing of the building being served. If the service line, meter or internal plumbing becomes plugged due to construction, the contractor under the supervision of the Contracting Officer shall remove the meter and flush the service line and the buildings internal plumbing.

D. *SPECIAL CONDITIONS*

New service connections made on existing two (2) inch copper or plastic mains shall consist of a 2 inch brass tee, with a one (1) inch cc threaded side outlet, cut in on the existing main unless otherwise directed by the Contracting Officer.

When a new main is installed and the existing service line consists of copper tubing; copper tubing shall be used to connect this existing service line to the new main. The minimum length of service pipe that shall be used to connect the existing service pipe to the new corporation stop is two (2) feet or unless otherwise directed by the Contracting Officer.

All service lines for gasoline service stations, gasoline and oil storage facilities, bulk chemical storage facilities or other high risk areas shall be copper tubing or ductile iron pipe in order to prevent the permeation of organic chemicals through the polyethylene tubing pipe wall and the subsequent contamination of the potable water.

PRIVATE STREET CONVERSION or **ROADWAY RECONSTRUCTION** may require lowering service lines that are deemed too shallow. Contractors shall be paid under the appropriate size in Item 301 at cost per foot for a given size service line.

When permanent repairs are made to any damaged or broken water service, all repairs shall be made as follows:

1. Plastic (PE) pipe up to one (1) inch in size shall be repaired with the same sized plastic (PE) pipe only.
2. Copper tubing up to two (2) inch in size shall be repaired with the same sized copper tubing only.
3. Iron or galvanized pipe up to one (1) inch in size shall be repaired with the same sized plastic (PE) pipe or copper tubing.
4. Iron or galvanized pipe between one (1) inch and two (2) inch in size shall be repaired with the same sized copper tubing only.
5. Cast iron or ductile iron pipe greater than two (2) inch in size shall be repaired with the same sized ductile iron pipe only.

E. *MEASUREMENT AND PAYMENT*

Service Connections, Service Box and Curb Stop, Service Box and Cut-in Curb Stop, Lower Street Service Box, and 2-Inch Taps will be measured per Each complete in place including excavation as specified herein.

All services 1” or less in size connected to the new main shall receive a service connection to be paid for at the Contract Unit Price. This price shall include all excavation less than 7 feet in depth, backfilling, compaction, the corporation stop, brass fittings, tapping of the water main, tools, labor, and equipment necessary to do the job.

Services that are to be relayed to the street line shall also include a service box and curb stop to be paid under the Contract Unit Price.

Cut-in Curb Stops shall be used where the existing service line is of acceptable material. This shall include all excavation less than 7 feet in depth, the curb stop, service box, service box extensions and base adapters, brass fittings, tools, labor, backfill, compaction, and equipment necessary to do the job.

Services to be abandoned, or boxes to be lowered at the main shall each be paid under the appropriate pay items. This shall include all excavation less than 7 feet in depth, brass fittings, a new service box if needed, tools, labor, backfill, compaction, and equipment necessary to do the job.

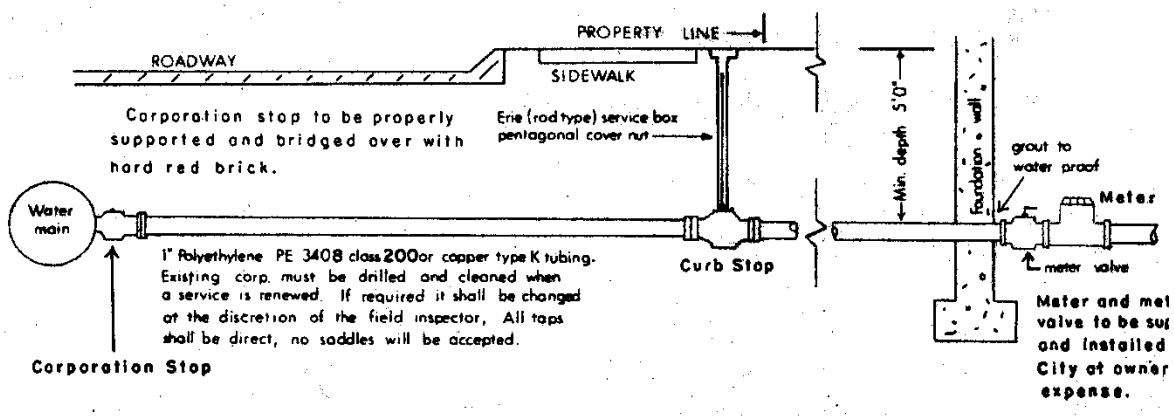

GENERAL NOTES

1. *Fittings and valves shall be manufactured by Ford or approved equal. Corporations: Ford FB1000 c.c. thread by compression; Curb Stops: B44 series full port (comp. x comp.)*
2. *All compression fittings used on polyethylene tubing shall be installed with solid, tubular stainless steel insert stiffeners.*
3. *Sand shall be used for backfilling from a point 6 inches below the pipe to a point 12 inches above the pipe. The remaining backfill shall have no stones greater than 3 inches in their largest dimension. Before any excavation is done and any pipe is installed, permits shall be obtained from the Management Service office at 20 East Worcester St. and the Water Engineering office at 18 East Worcester St. All paving shall conform to City of Worcester D.P.W. standards.*
4. *Services shall be flushed before activating to avoid meter clogging.*
5. *Main valves are to be operated by the City only. Costs incurred in shutting down mains due to negligence of the Contractor as determined by the Field Inspector shall be paid by the Contractor.*
6. *The Contractor shall inform the owner and the City wire inspector of proper grounding requirements pursuant to M.G.L. Chapter 165, Section 1C.*
7. *On new services, in accordance with the Mass. Department of Environmental Protection Code 5 and its amendments, the water service shall be a minimum of 10 horizontal feet from the sewer service.*
8. *The Contractor shall furnish and* ***completely*** *install the service from corporation to the meter valves with new materials.*
9. *Upon installation of the service box, the Contractor shall operate the stop to the satisfaction of the Field Inspector prior to acceptance of the job.*

S:\WATER\STANDARD\General Notes for 1 inch service.doc
Revised 4/2004

WATER SERVICE DETAIL TYPICAL 1 INCH CITY of WORCESTER D. P. W. WATER OPERATIONS	Rev. no	by	date	
	1	m/f	3/5/79	
	2	m/f	6/4/83	
	3	ACM	3/5/85	
	4	AVC	4/1/97	
	drawn by: vjk			DETAIL W-8A
	checked by: acm			
	2/24/78			

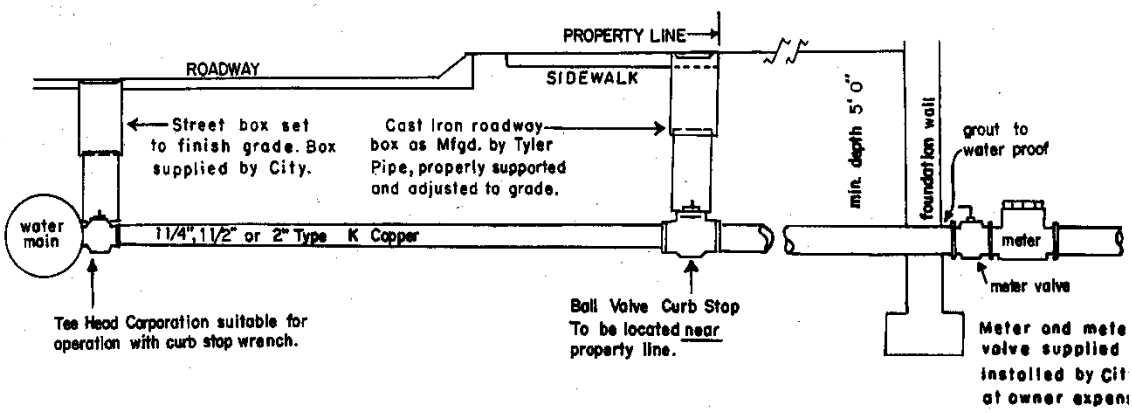

GENERAL NOTES

1. *Fittings and valves shall be manufactured by Ford or approved equal. Corporation: Ford FB1000 with tee head adapter (cc thread x comp.). Ball valve curb stop: Ford B44 series full port (comp. x comp.).*
2. *A. Mains 16 inches in diameter and larger: Taps shall be by direct means only.*
   B. Mains smaller than 16 inches in diameter: Service saddles shall be used. Saddles shall be double strap equal to Rockwell 313.
3. *Sand shall be used for backfilling from a point 6 inches below the pipe to a point 12 inches above the pipe. The remaining backfill shall have no stones greater than 3 inches in their largest dimension. Before any excavation is done and any pipe is installed, permits shall be obtained from the Management Services office at 20 East Worcester St. and the Water Engineering office at 18 East Worcester St. All paving shall conform to City of Worcester D.P.W. standards.*
4. *Services shall be flushed before activating to avoid meter clogging.*
5. *Main valves are to be operated by the City only. Costs incurred in shutting down mains due to negligence of the Contractor, as determined by the Field Inspector, shall be paid by the Contractor.*
6. *The Contractor shall inform the owner and the City wire inspector of proper grounding requirements pursuant to M.G.L. Chapter 165, Section 1C.*
7. *On new services, in accordance with the Mass. Department of Environmental Protection Code 5 and its amendments, the water service shall be a minimum of 10 horizontal feet from the sewer service.*
8. *The Contractor shall furnish and **completely** install the service from corporation to the meter valves with new materials.*
9. *Upon installation of the service box, the Contractor shall operate the valve to the satisfaction of the Field Inspector prior to acceptance of the job.*

S:\WATER\STANDARD\General Notes for 2 inch service.doc
Revised 4/2004

WATER SERVICE DETAIL	Rev. no.	by	date
TYPICAL 2 INCH,	1	ACM	6/16/88
1 ½ INCH or 1 ¼ INCH	2	AVC	2/12/92
CITY of WORCESTER	3	AVC	4/1/97
D. P. W.	drawn by: mjf		DETAIL
WATER OPERATIONS	checked by: acm		W-8B
	6/10/83		

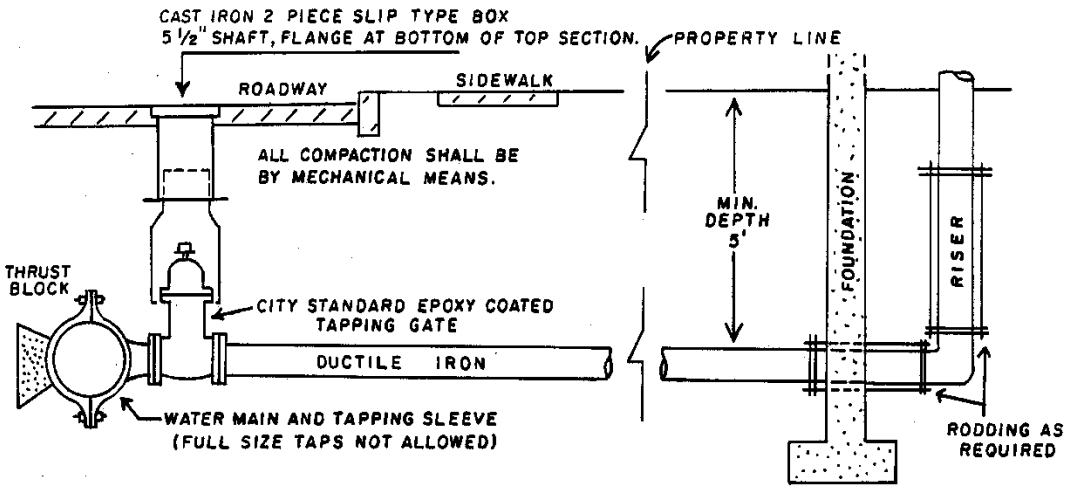

GENERAL NOTES

1. *Tapping sleeve shall be cast or ductile iron mechanical joint type. Tapping gate to be* ***City Standard Epoxy Coated.*** *The operating nut shall be 2 inches square and shall open right.*

2. *If excavated material is not suitable for backfilling, then the Contractor shall backfill with Gravel Borrow. Material used for backfilling shall contain no stones larger than 3 inches in its greatest dimension.*

3. *Before any excavation is done, a Street Opening Permit shall be obtained from the Public Works office at 20 East Worcester Street. All paving shall conform to City of Worcester D.P.W. standards.*

4. *Main line valves are to be operated by the City only. Costs incurred in shutting down mains due to the negligence of the Contractor as determined by the Field Inspector shall be paid by the Contractor. All tapping sleeves and tapping valve assemblies shall be hydrostatically pressure tested prior to tapping. The test shall be at 1-1/2 times the working pressure of the existing main or a minimum of 150 psi and shall be maintained for two hours, or as directed by the Field Engineer.*

5. *Upon installation of the gate box, the Contractor shall operate the tapping gate to the satisfaction of the Field Inspector prior to acceptance of the job.*

S:\WATER\STANDARD\General Notes for Large Service Detail.DOC
Revised 4/2004

LARGE SERICE DETAIL	REV NO.	BY	DATE
TYPICAL	1	AVC	4/2/97
CITY OF WORCESTER			
D.P.W.			
WATER OPERATIONS	RE-DRAWN BY:	AVC	4/2/97
NO SCALE	DRAWN BY:	VJK	DETAIL
	CHECKED BY:	ACM	W-8C
	DATE	2/24/78	

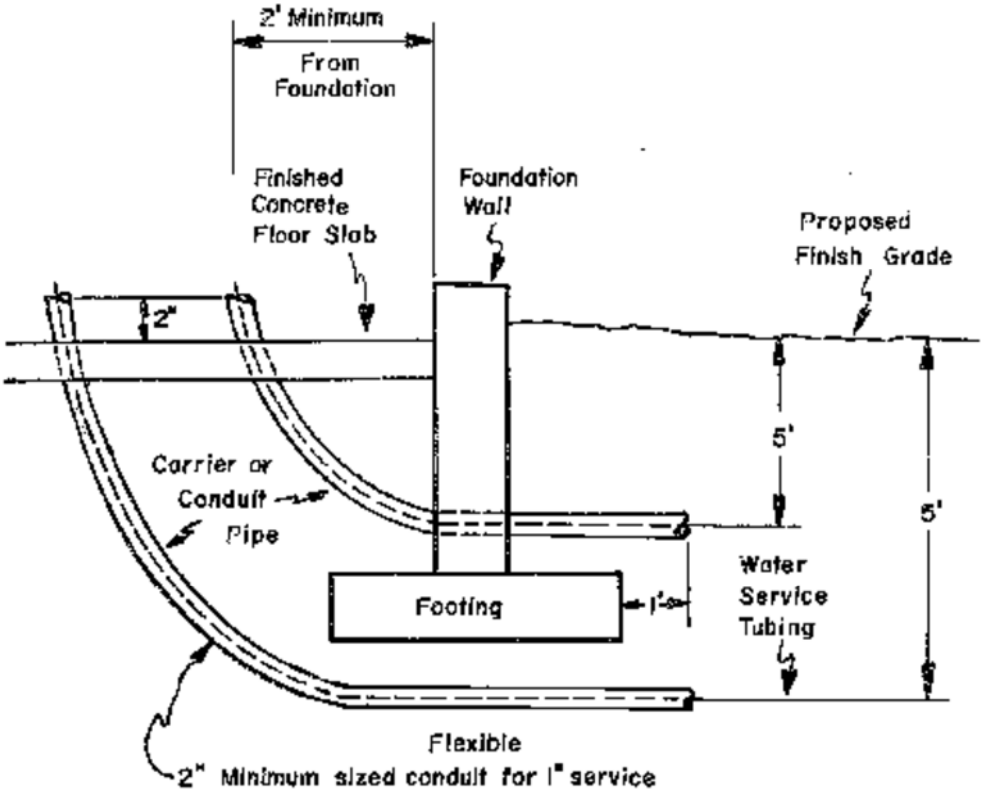

GENERAL NOTES

1. *When any water service 1-inch or less in size is to be installed under a concrete floor slab, the pipe shall be installed inside an approved conduit. This conduit shall be used as a sleeve or carrier pipe to receive the proposed water service tubing.*

2. *The size of the conduit shall be at least twice the diameter of the water service pipe being installed.*

3. *The conduit shall be installed as shown in drawing W-8D which is part of these specifications.*

S:\WATER\STANDARD\General Notes for service details\General Notes for Water Service Entrance Detail.DOC
5/2006

WATER SERVICE ENTRANCE DETAIL	Rev. No.	By	Date
CITY of WORCESTER			
D. P. W. & P.	Drawn By: P.N.B.		DETAIL
WATER OPERATIONS	Checked By: A.C.M.		W - 8D
	5/12/06		

ITEM 310 HYDRANTS

ITEM 310.1	**NEW HYDRANT**	**EA.**
ITEM 310.2	New Single Port Flushing Hydrant	Ea.
ITEM 310.3	**HYDRANT REMOVED AND STACKED**	**EA.**
ITEM 310.4	**HYDRANT REMOVED AND RESET**	**EA.**
ITEM 310.5	**INSTALL NEW CITY SUPPLIED HYDRANT**	

A. ***SCOPE OF WORK***

The work under this section shall consist of furnishing and installing new hydrants and removing and resetting existing hydrants, as specified herein, as shown on the plans, or as directed by the Contracting Officer.

B. ***MATERIALS***

Fire hydrants shall be manufactured to comply in all respects to the latest revision of AWWA Standard C-502 and shall comply with the specific requirements and design standards per the Kennedy Valve drawing no. 80783 which is attached and is part of these specifications.

The design of the fire hydrant described below shall be based on a minimum internal hydrostatic pressure (working water pressure) of 200 psi.

Hydrants shall be UL listed and FM approved.

Hydrants shall be a post type, dry top design with the main valve closing with the pressure of the normal water flow. The minimum main valve size shall be 5-1/4 inches.

Hydrants shall open **right (clockwise)**.

The operating nut shall be one (1) piece bronze and it shall be pentagonal in shape measuring 1-5/8 inches from point to opposite flat. An alemite (grease) fitting shall be supplied threaded into the operating nut for periodic lubrication of the operating threads with grease.

The nozzle cap nuts shall be pentagonal in shape measuring 1-5/8 inches from point to opposite flat.

Hydrants shall be designed for installation in a trench that will provide five (5) foot minimum depth of cover.

Hydrants shall be equipped with two (2) 2-1/2 inch hose nozzles and one (1) 4-1/2 inch pumper nozzle, national standard thread. Hose and pumper nozzles shall be the ¼ turn type, secured into the upper barrel of the hydrant by O-ring seals and stainless steel retaining screws. Each nozzle cap shall be provided with a Buna N rubber washer.

Hydrants shall be of the traffic model breakaway-type. The union between upper and lower stems shall be made by a breakable cast iron coupling retained into place by stainless steel pins. To insure proper repair, the breakable coupling shall have the word TOP cast on the appropriate half. The two (2) -piece traffic flanges shall be held in place by nuts and bolts. The upper barrel shall be able to be rotated 360 degrees without removing any bolts.

Lower barrel flanges shall be constructed of ductile iron and permanently screwed onto the ductile iron lower barrel. Flanges secured by snap rings are not acceptable. Lower barrel bolt holes mating with the break flange shall be notched to facilitate easy bolt replacement.

A dirt shield or weather cap shall be standard. This cap or shield shall be marked with an arrow and the word “open” to indicate the direction to turn the stem to open the hydrant.

The hydrant drain valve shall operate automatically, without the aid of springs, pin or toggles, each and every time the hydrant is used. The drain valve mechanism is to be an integrally cast part of the upper valve plate. The hydrant elbow shall have its interior and exterior coated with fusion bonded NSF approved epoxy. The hydrant elbow shall be equipped with at least two (2) copper or bronze lined drain ports. The seat ring shall thread into a bronze bushing or drain ring. Pressure seals shall be “O” ring.

Hydrants shall be factory tested at 400 psi with the main valve in both the open and closed positions. Manufacturer shall provide independent verification of this test and of the hydrant flow characteristics.

Hydrant inlet connections shall be a 6-inch mechanical joint. Hydrant accessories kits shall be supplied with each hydrant and shall consist of one (1) M.J. gland, one (1) M.J. gasket, and six (6) 3-1/2 inch "T" head bolts and nuts.

Hydrants shall be painted high-visibility yellow above the break flange.

Bolts for all mechanical joints shall be high strength low alloy steel bolts only, conforming to ANSI/AWWA C111/A21.11-90. Bolt manufactures certification of compliance shall accompany each shipment.

To insure compliance with AWWA and other applicable standards, and access to manufacturing facilities for inspection purposes, and assure timely shipment and delivery, all Fire hydrants shall be manufactured, assembled, and tested in plants located with the continental United States.

As specified on figure W-9, part of these specifications.

C. *DESIGN AND CONSTRUCTION*

The contractor shall be responsible for obtaining properly sized hydrants. There shall be no additional compensation to the contractor if an extension is required to raise the hydrant up to obtain the proper exposed hydrant height.

Hydrant heights shall be obtained by measuring the distance from finish grade to the bottom or invert of the connection pipe.

The centerline of the lowest nozzle of the hydrant shall be eighteen (18) inches above finish grade.

The hydrant shall have a set back of twelve (12) inches from the curb line to the point of the hydrant nearest the curb or as the Contracting Officer directs.

All hydrants shall be installed in the grass plot between the curb and the sidewalk wherever possible.

The pumper connection of the hydrant shall face the street.

In the event that a hydrant is borrowed from the Water Operations' yard, the contractor shall submit a Purchase Order for the exact hydrant height that was obtained.

Hydrants shall be properly supported and held plumb while the connections are being made, and during backfilling. One-half cubic yard of pea stone shall be placed as directed to drain each hydrant drip.

A layer of 8 mil. polyethylene shall cover the pea stone prior to backfilling to prevent clogging of the drainage area

Thrust blocks shall be placed in accordance with the details and as directed by the Contracting Officer.

Hydrants shall be located not more than 300 feet apart in high value areas, and shall not exceed 500 foot spacing in residential areas, and shall be located as directed by the Contracting Officer.

Abandoning any hydrant shall include the removing, transporting and unloading of the existing hydrant at 1065 Millbury Street. The cutting out of the hydrant tee and the installation of a section of appropriate sized CLDI pipe; the removal and stacking of the valve box; and the cutting and plugging of the old connecting pipe.

The contractor shall verify in the field that each hydrant drains in a reasonable amount of time and shall be approved by the Contracting Officer before acceptance.

The controlling valve for the hydrant shall be restrained to the water main by the use of an Anchor Tee.

D. *SPECIAL CONDITIONS*

Persons wishing to move, relocate or abandon any public hydrant shall petition the City Council for permission to move or relocate that hydrant.

Private use of any public or private hydrant shall not be allowed without prior authorization. Persons wishing to use a hydrant shall apply for a permit at Water Operations Engineering for the use of that hydrant. No hydrant use shall be allowed during winter months.

Flow Tests shall be allowed with the persons requesting the test taking all readings and Water Operations' personnel operating all hydrants. No flow tests shall be allowed during winter months.

E. *MEASUREMENT AND PAYMENT*

Hydrants, Hydrants Removed and Reset, Hydrants Removed and Stacked, Install New City Supplied Hydrant will be measured per Each complete in place as specified herein.

Hydrants, Hydrants Removed and Reset, Hydrants Removed and Stacked, will be paid for at the Contract Unit Price, which price shall include all excavation, hydrants, hydrant extensions, and stone for drainage area, plastic to cover drainage area, backfill, materials, tools, labor, and equipment necessary to complete the work as specified herein.

Install New City Supplied Hydrant shall include all excavation, hydrant extensions, stone for drainage area, plastic to cover drainage area, backfill, materials, tools, labor, and equipment necessary to complete the work as specified herein.

Note: As of 8/17/04 Kennedy Hydrant K81D is an approved equal to

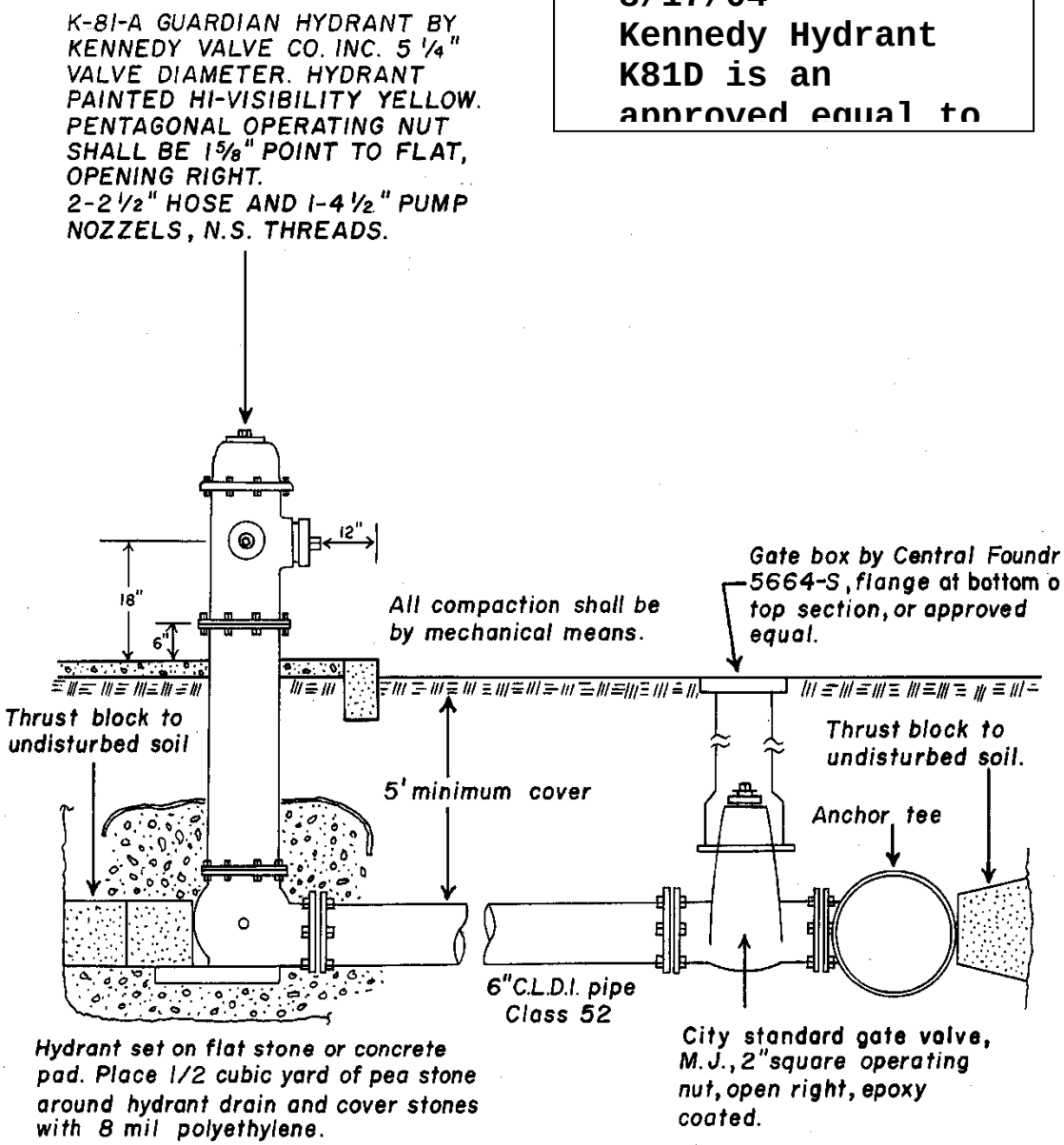

HYDRANT DETAIL Typical CITY of WORCESTER DEPARTMENT of PUBLIC WORKS NO SCALE WATER OPERATIONS	Rev. No.	By	Date	
	1	MJF	5/5/78	
	2	MJF	11/28/80	
	3	AVC	2/7/91	
	4	AVC	3/31/97	
	5	AVC	12/28/00	
	Drawn by: R.H. & A.V.C.		DETAIL	
	Checked by: A.C.M.		W-9	
	Date: 2/24/78			

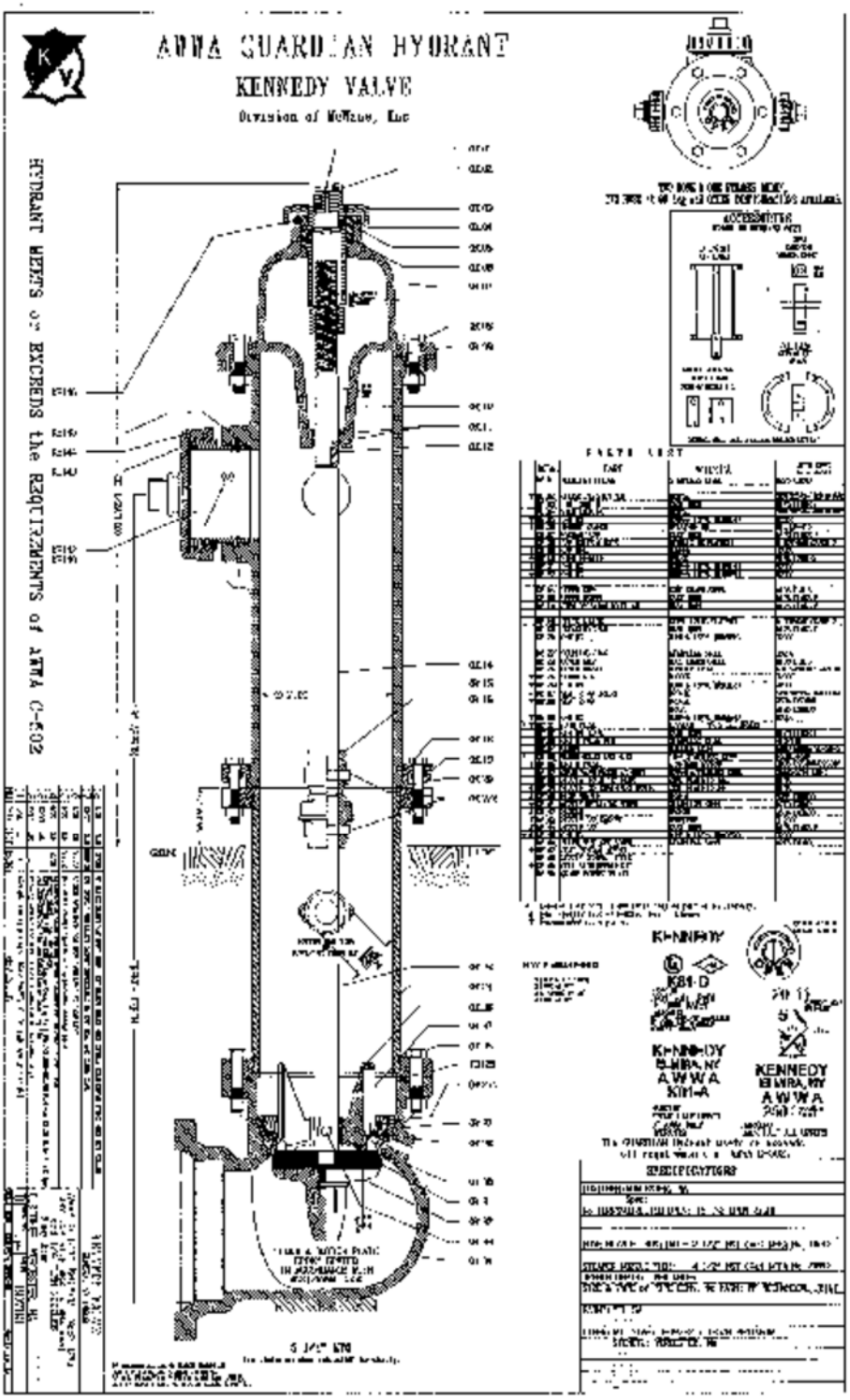
AWWA GUARDIAN HYDRANT
KENNEDY VALVE
Division of McWane, Inc
HYDRANT MEETS OR EXCEEDS the REQUIREMENTS of AWWA C-502
KENNEDY
KEN-D
KENNEDY
ELMIRA, NY
AWWA
KEN-A
KENNEDY
ELMIRA, NY
AWWA

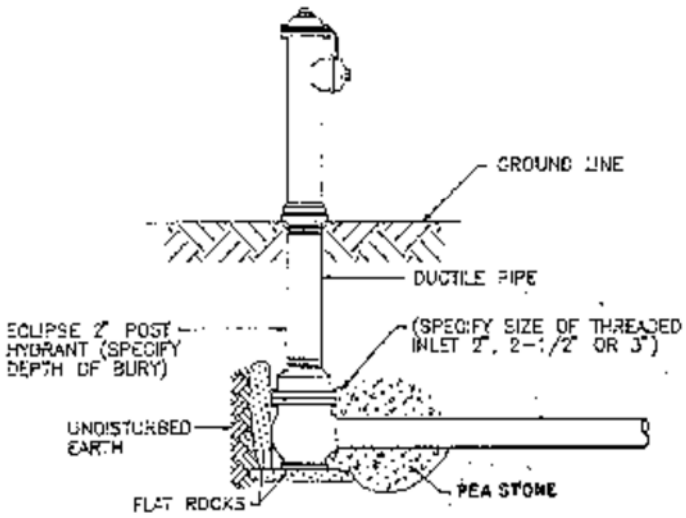

Blow-off hydrants shall be Eclipse No. 2 Post Hydrants as manufactured by John C. Kupferle Foundry Company, St. Louis, MO or equal.

Hydrants shall be self-draining, non-freezing, compression type with 2-2/16" main valve opening. Inlet connection shall be 3" MJ or 4" MJ. Outlet shall be NST.

Hydrants shall have a 3" ductile iron pipe riser with a cast iron stock top, and non-turning operating rod. Principal interior operating parts shall be brass and removable from the hydrant for servicing without excavating the hydrant.

Hydrants shall be set in 4 cubic feet of pea stone to allow for proper drainage of the hydrant. The drainage area shall be covered with fabric 1 plastic. Recommendations of the AWWA should be followed when installing the hydrants.

	Rev. No.	By	Date
SINGLE PORT BLOW-OFF			
CITY of WORCESTER			
D. P. W. & P.			
WATER OPERATIONS	Drawn By: P.N.B.		DETAIL
	Checked By: A.C.M.		W - 13B
	Date: 4/27/07		

ITEM 310.6 HYDRANT PAINTING

A. *GENERAL*

Paint Specifications:

1	Specially formulated to protect metal surface from rust and corrosion.
2	Resists chipping, peeling and impacts while retaining excellent color and gloss.
3	Protects against mild chemical spills, fumes, oil, and grease while providing superior gloss, color retention, and hiding.
4	Application Method: Brush, roller, or spray
5	Surfaces: Metal, Steel
6	Exposure Conditions: Mild and Moderate
7	Color: OSHA Yellow
8	Formulation: Metal Finish, Styrenated Alkyd base, Speedy Dry, Enamel, High Gloss
9	Unit size: Gallon (U.S.)
10	Weight: 10lbs/gal
11	VOC: greater than 450g/l
12	Tack free time: 5-15 min @ 75 Degrees Farenheit, 50% Relative Humidity
13	Dry time: 1 to 2 hours @ 75 Degrees Farenheit, 50 % Relative Humidity
14	Recoat: 2 to 4 hours @ 75 Degrees Fahrenheit
15	Coverage: 200 to 400 sq.ft/gal
16	Thinning/Cleaning: Tuluol, Xylol
17	Acceptable Brands:
18	Insil-X, Al Pro
19	Wilbur Williams, Totrust
20	Rust-O-Leum, High Performance Industrial

Acceptable Brands:

Insil-X, Al Pro; Wilbur Williams, Totrust; Rust-O-Leum, High Performance Industrial

Known Supplier:

Economy Paint Supply Co., 140 Chandler Street, Worcester, MA 01609

Tel: (508) 754-0015; (508) 792-0883

B. *LABOR SPECIFICATIONS*

The contractor is to supply all labor and materials including paint, brushes, scrapers or other materials needed to adequately paint the City hydrant.

Inspection of the hydrants will consist of a visual inspection for damage. Any visual damage will be reported to Water Operations with the intention that the City will repair the hydrant prior to painting.

Brush and any other debris will be removed from around the hydrant to an approximate 3 foot radius around the hydrant if required. Any brush and debris to be disposed of will be placed in the back of the truck and disposed of by the Contractor at his expense in an approved manner.

A “skirt” or other type of covering shall be laid on the ground around the base of the hydrant to prevent paint from splattering on the ground or sidewalk.

Any loose paint will be scrapped from the hydrant using a wire brush. Paint chips will be cleaned or removed from around the hydrant.

Apply covering coat of paint to all areas of the hydrant. Hydrants will be painted in accordance with the Worcester Water Operation's color code system. Low Service hydrants shall be painted all yellow. High Service hydrants shall be yellow except for the bonnet, which shall be painted white. Super High Service hydrants shall be painted yellow except for the bonnet, which shall be painted red.

Painting will only be done under temperature and/or weather conditions as per the recommendations of the paint manufacturer.

All left over paint, paint cans or painting supplies such as brushes and rags shall be disposed of by the contractor at his expense in a pre- approved manner that complies with all regulations pertaining to hazardous materials.

The scope of work will be performed during the DPW's normal work hours, normally 7:30AM to 4:00PM Monday through Friday, unless otherwise noted.

Care shall be taken not to paint any anti-vandalism device that may be attached to a hydrant.

C. ***MEASUREMENT AND PAYMENT***

The work under this item will include all materials and labor necessary to complete the work as specified herein. The pay item will be paid per each.

ITEMS 311 and 312 TAPS AND TIE-INS

ITEM 311.02	**2" TAP**	**EA.**
ITEM 311.04	**4" TAPPING SLEEVE & VALVE**	**EA.**
ITEM 311.06	**6" TAPPING SLEEVE & VALVE**	**EA.**
ITEM 311.08	**8" TAPPING SLEEVE & VALVE**	**EA.**
ITEM 312.02	**2" TIE-IN**	**EA.**
ITEM 312.03	**3" TIE-IN**	**EA.**
ITEM 312.04	**4" TIE-IN**	**EA.**
ITEM 312.06	**6" TIE-IN**	**EA.**
ITEM 312.08	**8" TIE-IN**	**EA.**
ITEM 312.10	**10" TIE-IN**	**EA.**
ITEM 312.12	**12" TIE-IN**	**EA.**
ITEM 312.14	**14" TIE-IN**	**EA.**
ITEM 312.16	**16" TIE-IN**	**EA.**
ITEM 312.20	**20" TIE-IN**	**EA.**
ITEM 312.24	**24" TIE-IN**	**EA.**
ITEM 312.30	**30" TIE-IN**	**EA.**
ITEM 312.36	**36" TIE-IN**	**EA.**

A. ***SCOPE OF WORK***

Work under this section shall consist of making all connections (tie-ins) from the new main to existing mains, existing hydrant laterals and existing services 1-1/2" and greater in size and the making of any and all taps on new or existing mains 1-1/2" greater in size as shown on the plans and as directed by the Contracting Officer. (The tapping for and the tying-in of individual services 1" or less in size is not included in this item, see Item 309.)

B. ***MATERIALS***

All bolted sleeve-type couplings, reducing couplings, transition couplings, and flanged coupling adapters used to join plain-end steel, cast iron and ductile iron pipe shall conform to the latest revision of AWWA C219 and shall in addition meet the specific requirements and exceptions which follow:

1. The design of bolted couplings shall be based on a rated working pressure of 200 psi, a transient or surge pressure allowance of 100 psi, and a hydrostatic test pressure of 300 psi.
2. Couplings shall be manufactured from carbon steel, stainless steel, ductile iron or malleable iron. All materials used shall conform to AWWA C219, section 4.2.
3. Bolts for all bolted, sleeve-type couplings shall be high strength, low alloy steel bolts only, conforming to AWWA C111 as latest revised. Bolt manufacturers certification shall accompany each shipment.

4. All couplings shall be clearly marked as specified in AWWA C219. These markings shall include the manufacturer's model number or type, pipe size (outside diameter of pipe), center sleeve section identification, or, for steel center sleeves, thickness and length, and the rated working water pressure

Tapping sleeves shall be cast or ductile iron full sleeve type capable of containing pressure within the full volume of the sleeve. Sleeves shall be mechanical joint type for use with Class AB or CD cast iron pipe or ductile iron pipe. All tapping sleeves shall conform to the provisions set forth in Items 302 and 303 of these specifications. All tapping sleeves shall have a threaded plug tapped into the body of the tapping sleeve for pressure testing purposes. **Wrap around stainless steel sleeves shall not be allowed. As an alternate to cast or ductile iron, rigid stainless steel tapping sleeves with removable bolts may be used. Sleeves shall be all stainless steel 304 (18-8) construction with a full gasket giving 360 degree pipe coverage. Sleeves may have stainless steel flange outlet to be used with standard tapping gate or mechanical joint (MJ) outlet suitable for use with standard (MJ) X (MJ) resilient wedge gate valves per AWWA C509.**

All service saddles shall conform to the following:

1. All service saddles shall have cc (AWWA) threaded outlet.
2. All service saddles for use on cast or ductile iron water mains shall be a double strap (bale) equal to or better than the Ford F202, Mueller DR2A, PowerSeal 3413 or Smith-Blair 313.
3. All service saddles for PVC mains or cast or ductile iron mains in known or suspected corrosive soils shall be a stainless steel double strap (band) equal to or better than Ford FSD202, Mueller DR2S, PowerSeal 3417 or Smith-Blair 317.

All 2 inch valves and tapping valves shall conform to all the provisions set forth in Items 303 through 309 of these specifications.

Bolts for all Flexible Couplings, Flanged and Mechanical Joints shall be high-strength, low alloy steel bolts only, conforming to the latest revision of AWWA C111. Bolt manufacturers certification of compliance shall accompany each shipment.

C. *DESIGN AND CONSTRUCTION*

Where existing fittings are available, a tie-in shall be made to connect the existing main, hydrant lateral or service lateral to the new main.

Where the difference in O.D.'s between the two pipes being joined is greater than one-half (1/2) inch, a transition coupling shall be used. No couplings with transition style gaskets shall be used.

Where there are no existing fittings available in the existing main to which the new main is to be connected, a tap may be required.

When 1-1/2 inch and 2 inch taps are made on mains less than 16 inches in diameter, service saddles shall be used.

When 1-1/2 inch and 2 inch taps are made on mains 16 inches in diameter and larger, the tap shall be made by direct means only.

All tapping sleeves and tapping valve assemblies shall be hydrostatically pressure tested prior to tapping. The test shall be at 1-1/2 times the working pressure of the existing main or a minimum of 150 psi and shall be maintained for one (1) hour, or as directed by the Contracting Officer.

The water service shall be maintained as continuously as possible when taps and tie-ins are made. The contractor shall notify all persons affected by the disruption of water service a minimum of 24 hours prior to the shutdown.

An approved tar coating shall be applied on the entire outer surface of all flexible couplings including bolts, when installed.

The contractor shall install permanent blocking under the tapping valve to prevent any movement of the tapping sleeve and valve on the pipe.

The contractor shall construct a thrust block behind each tapping sleeve after the sleeve has been successfully pressure tested. All thrust blocks shall conform to all provisions in Item 313 of these specifications.

The contractor shall be responsible for the proper sizing of the tapping sleeve.

No full sized taps shall be allowed (example: 8" tap on an 8" main) without prior written approval from the Director of Water Operations.

All taps shall be made on the horizontal and a minimum of three (3) feet away from any joint or bell in the water main unless otherwise directed by the Contracting Officer.

D. ***MEASUREMENT AND PAYMENT***

Taps and Tie-ins will be measured per Each complete in place as specified herein.

Taps and Tie-ins shall be paid for at the Contract Unit Price as set forth in the Proposal. Price shall include full compensation for furnishing all labor; materials, tools, equipment and incidentals for doing all the work as specified herein.

Included in the tap item shall be all necessary excavation, backfilling, compaction, dewatering, tapping sleeves, service saddles, tapping valves, 1-1/2 inch and 2 inch corporations.

Included in the tie-in item shall be the removal of any existing restraints, plugs, caps, reducers; the installation of all couplings, pipe nipples, rodding, pouring of lead joints if necessary; and all the necessary excavation, dewatering, cutting of pipe, backfilling and compaction.

ITEM 313 THRUST BLOCKS

ITEM 313.1	**THRUST BLOCK**	**C.Y.**
ITEM 313.2	**THRUST BLOCK**	**EA.**

A. ***SCOPE OF WORK***

The work under this section shall consist of furnishing and placing thrust blocks, or other approved methods of thrust restraint wherever pipes change direction or size as directed by the Contracting Officer.

B. ***MATERIALS***

Cement Concrete

All Cement Concrete shall conform to the requirements as set forth in the most recent edition and amendments thereto of the Standard Specifications for Highways and Bridges, Massachusetts Highway Department, Commonwealth of Massachusetts.

Cement Concrete for thrust blocks shall conform to Section 4.02 (3000 psi, 1-1/2", 470) of the above-mentioned specifications.

Mechanical Joint Thrust Restraining Fittings

Dimensions of glands used in mechanical joint restraining fittings shall be such that they can be used with the standardized mechanical joint bell and tee head bolts conforming to the requirements of AWWA C110 (gray and ductile iron standard fittings) or AWWA C153 (ductile iron compact fittings) and AWWA C111.

C. ***DESIGN AND CONSTRUCTION***

The balancing of thrust forces in buried pipelines is usually accomplished with the use of bearing or gravity thrust blocks, restrained joint pipe systems, or a combination of these two methods. The criteria and basis for the design of thrust restraint shall be as published by the Ductile Iron Pipe Research Association (DIPRA) entitled “Thrust Restraint for Ductile Iron Pipe”, current edition.

All tees, bends, reducers, plugs, caps, offsets, hydrants and other fittings that either change the direction of flow or stop flow completely shall be restrained or blocked.

The following parameters shall be used for design purposes:

1. Soil Bearing Pressure shall be 3,000 LB. per SQ. FT. (psf).
2. Hydrostatic Test Pressure shall be 200 LB. per SQ. IN. (psi).
3. All cement concrete used for thrust blocks shall have a compressive strength of 3,000 LB. per SQ. IN. (psi) at 28 days as specified above.
4. Safety Factor (S_F) shall be 1.5.

Thrust Blocks

The City of Worcester shall allow the use of thrust blocks on water mains and larger diameter water services as a means of restraining thrust.

Thrust blocks shall be constructed as directed by the Contracting Officer, and in full accordance with Typical Thrust Block Detail sheets which are a part of these specifications.

Thrust blocks shall be centered on the resultant thrust force to ensure an even transfer of forces from the pipe or fitting to the block. All thrust blocks shall cradle the pipe or fitting it is poured against.

Thrust Blocks shall be cement concrete poured against undisturbed original ground or approved compacted backfill to ensure an even transfer of forces to the surrounding ground.

All glands, joints, bolts and nuts shall be covered or wrapped with heavy duty polyethylene sheeting (8 mil or greater) to keep the concrete from bonding to the pipe and appurtenances. The plastic shall be placed so that pipe joints will be accessible for any future repairs. **NO** concrete shall directly cover pipe joints, fitting joints, nuts, bolts or hydrant drain holes.

Blocks shall be poured directly against forms.

Thrust anchors or a dead man may be used to restrain vertical bends. The weight or mass of the thrust anchor shall be the force balancing the vertical thrust component. Embedded steel rods anchor the fitting to the concrete block to resist the upward thrust. Anchoring rods spaced equally across the top of the bend shall be embedded in concrete. The number and size of the rods shall be as detailed in the Typical Thrust Block Detail sheets which are a part of these specifications.

Tie Rods

Yokes, friction clamps, pipe anchors and tie-rods can be installed to resist thrust forces either alone or as an addition to thrust blocks or restrained joint pipe when and as directed by the Contracting Officer. For mechanical joints, tie-rods may be threaded through the bolt holes in the flange and secured to the rod by using nuts and washers.

All steel, including rods, clamps, bolts and nuts shall be protected from galvanic action or corrosion by coating with an approved bitumastic coating or other corrosion retarding material before the pouring of concrete and/or backfilling.

Restrained Joint Pipe

Restrained push-on and mechanical joints can be used as an alternative to thrust blocking and/or tie-rods for resisting thrust forces. A restrained joint is a special push-on type or mechanical joint that is designed to provide longitudinal restraint where there is a shortage of space due to conflicts with other utilities and structures, and where there is the possibility that the soil behind the fitting has been or will be disturbed.

The criteria and basis of design for all restrained joint pipe shall be the Ductile Iron Pipe Research Association (DIPRA) publication entitled “Thrust Restraint Design for Ductile Iron Pipe,” current edition. In addition to DIPRA a computer software program for pipe thrust restraint design has been developed by EBBA Iron Sales, Inc. entitled “Restrained Length calculator”, current version. This program is based on the same engineering principles, criteria and analytical approach as the DIPRA design requirements. The use of the program by EBBA is approved. The parameters to be used shall be the same as those listed above.

D. *MEASUREMENT AND PAYMENT*

Thrust blocks will be measured per Cubic Yard completely in place as specified herein.

Thrust blocks will be paid for at the Contract Unit Price as set forth in the Proposal, which price shall include all materials, tools, labor, equipment, and incidentals necessary to complete the work as specified herein.

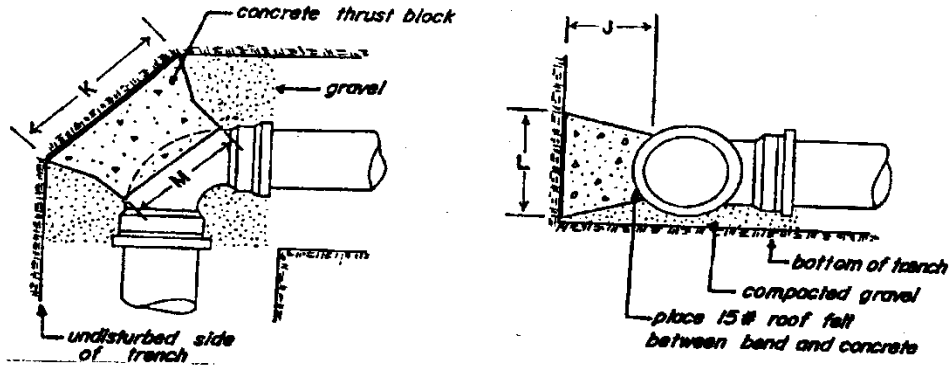

PLAN SECTION

TYPICAL PLACEMENT ON BENDS

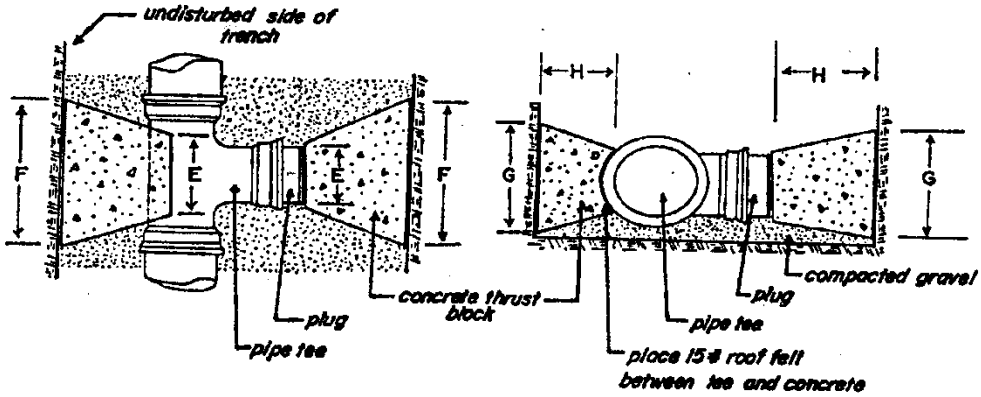

PLAN SECTION

TYPICAL PLACEMENT ON FITTINGS

THRUST BLOCK DETAILS TYPICAL CITY OF WORCESTER Department of Public Works No Scale Water Operations	Rev. no. by	date
	Drawn By: R.H.	Detail
	Checked By: A.C.M.	W-12
	Date: 2/24/78	

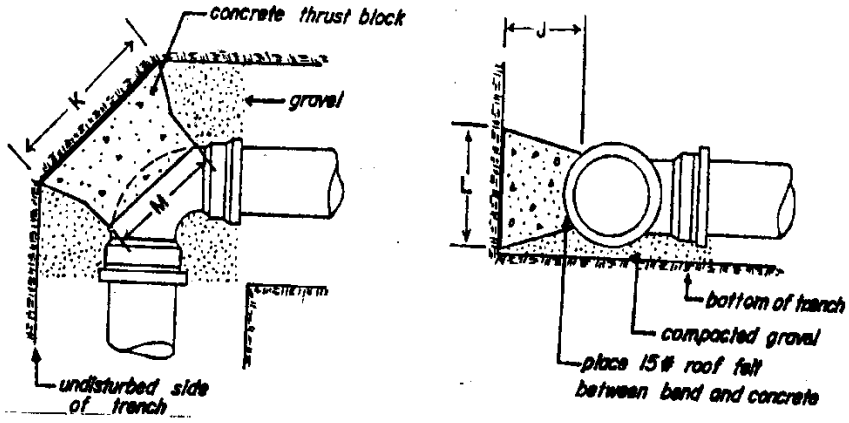

PLAN SECTION

TYPICAL PLACEMENT ON BENDS

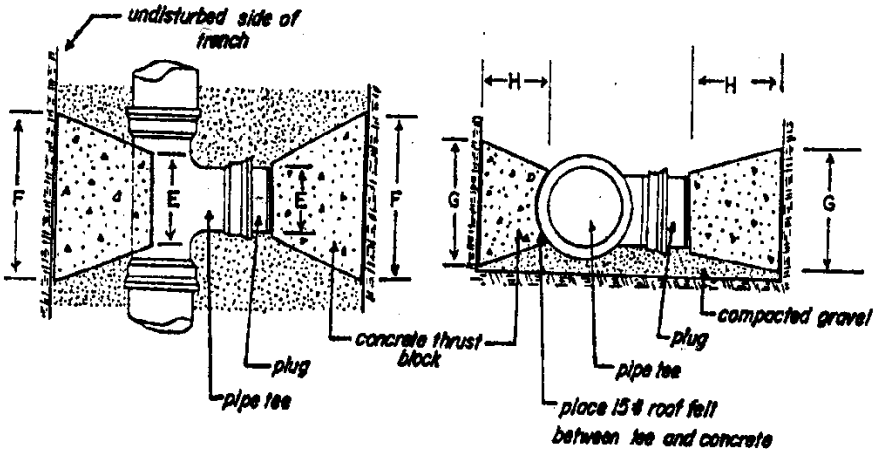

PLAN SECTION

TYPICAL PLACEMENT ON FITTINGS

THRUST BLOCK DETAILS TYPICAL CITY OF WORCESTER	Rev. no. by	date
Department of Public Works No Scale Water Operations	Drawn By: R.H. Checked By: A.C.M. Date: 2/24/78	Detail W-12

Dimensions for Blocks behind Tees and Plugs – Horizontal Thrust

	E	F	G	H	Volume (CU. YD.)
6”	1’ 0”	1’ 6”	2’ 0”	1’ 0”	0.06
8”	1’ 0”	2’ 0”	2’ 6”	1’ 0”	0.09
12”	1’ 0”	3’ 0”	3’ 6”	1’ 3”	0.20
16”	1’ 3”	4’ 0”	4’ 0”	1’ 6”	0.40
24”	1’ 6”	7’ 0”	5’ 0”	2’ 0”	1.2

Dimensions for Blocks behind Bends – Horizontal Thrust

		¼ (90°) Bend	1/8 (45°) Bend	1/16 (22 1/2°) Bend	1/32 (11 1/4°) Bend
6”	J	1’ 0”	1’ 0”	1’ 0”	1’ 0”
	K	2’ 0”	1’ 0”	1’ 0”	1’ 0”
	L	2’ 0”	2’ 0”	1’ 0”	1’ 0”
	M	1’ 0”	1’ 0”	1’ 0”	1’ 0”
Volume (cu yd)		0.07	0.04	0.03	0.03
8”	J	1’ 0”	1’ 0”	1’ 0”	1’ 0”
	K	2’ 6”	1’ 6”	1’ 0”	1’ 0”
	L	3’ 0”	2’ 6”	2’ 0”	1’ 0”
	M	1’ 0”	1’ 0”	1’ 0”	1’ 0”
Volume (cu yd)		0.13	0.07	0.05	0.03
12”	J	1’ 3”	1’ 3”	1’ 3”	1’ 3”
	K	3’ 6”	2’ 6”	2’ 0”	1’ 0”
	L	3’ 0”	3’ 0”	2’ 0”	2’ 0”
	M	1’ 0”	1’ 0”	1’ 0”	1’ 0”
Volume (cu yd)		0.23	0.12	0.11	0.07
16”	J	1’ 6”	1’ 6”	1’ 6”	1’ 6”
	K	4’ 6”	3’ 0”	2’ 6”	1’ 6”
	L	5’ 0”	4’ 0”	3’ 0”	2’ 6”
	M	1’ 3”	1’ 3”	1’ 3”	1’ 6”
Volume (cu yd)		0.58	0.35	0.23	0.16
24”	J	2’ 0”	2’ 0”	2’ 0”	2’ 0”
	K	7’ 0”	4’ 6”	3’ 5”	2’ 6”
	L	7’ 0”	6’ 0”	4’ 0”	3’ 0”
	M	1’ 6”	1’ 6”	1’ 6”	1’ 6”
Volume (cu yd)		1.58	1.0	0.58	0.45

ITEM 314 BLOW-OFFS AND AIR RELEASE VALVES

ITEM 314.1	**1-1/4" AIR RELEASE VALVE**	**EA.**
ITEM 314.2	**1" BLOW OFF**	**EA.**
ITEM 314.3	**DIG AND PLUG EXISTING CONNECTION UP TO 2"**	**EA.**
ITEM 314.4	**BLOW OFF MANHOLE**	**EA.**
ITEM 314.5	**DIG AND PLUG EXISTING CONNECTION 3" AND LARGER**	**EA.**

A. *SCOPE OF WORK*

The work under this section shall consist of furnishing and installing new air release valves and blow-offs of various sizes, including all necessary appurtenances, on new and existing water mains or digging and plugging an old service connection at the main as shown on the plans, or as directed by the Contracting Officer.

B. *MATERIALS*

All brass fittings shall conform to AWWA C800 as latest revised with a maximum lead content of 0.25 % by weight and shall be manufactured by Ford Meter Box Company or equal unless otherwise approved by the Director. The design of all brass fittings shall be based on a minimum internal hydrostatic pressure (working water pressure) of 200 psi.

Corporations (for air release valves): F800 cc thread x IP thread outlet.

Ball Valves (for air release valves): B11 series (full port) F.I.P. x F.I.P.

Brass "Street" Elbow (for air release valves): F.I.P. x M.I.P.

All valves, pipe, fittings and other appurtenances other than these specified above shall conform to all applicable specifications set forth in the appropriate sections of these specifications and Detail Sheets 13, 13A and 13C which are part of these specifications.

C. *DESIGN AND CONSTRUCTION*

Air Release Valves shall be placed at all high points on any water main installation. Air Release Valves shall be used to expel air as the water main is filled with water and shall be shut after all air has been expelled. Air Release Valves shall also be used to allow air to enter the water main to aid in the draining of that main when it is shut down.

One (1) inch Blow-Offs shall be placed on any water main that is dead-ended and has no other means of flushing out that dead-end.

All one (1) inch Blow-Offs shall have a threaded connection on the top of the copper riser pipe to allow for a hose to be tied onto that Blow-Off to carry the water away to the drainage system.

All Blow-Offs greater than one (1) inch in size shall be installed with a blow-off manhole as shown in Detail Sheet 13C.

One-half cubic yard of pea stone shall be placed under and around the air release valve or one (1) inch blow-off prior to the setting of the valve box to drain the valve box. A layer of 8 mil polyethylene shall cover the pea stone prior to backfilling to prevent the clogging of the drainage area.

Taps for air release valves and one (1) inch blow-offs shall be made vertically plumb and shall remain that way during the setting of the valve box and backfilling.

Air release valves and one (1) inch blow-offs are not interchangeable. Each one has a specific purpose and shall be used for that purpose only.

Blow-Off manholes shall be pumped out when using that blow-off.

No blow-off shall be piped directly or indirectly into any sanitary or surface sewer.

The contractor may be required to plug and/or cap water service, blow-off, air cock or other pipe connections two (2) inch or less in size that are no longer in use and are called out on the plans to be abandoned. This plug or cap shall be made right into the water main whenever possible, with all old fittings or corporation stops removed, or as directed by Contracting Officer. This item shall apply to all pipes up to 2" or less in size and shall include all work, brass fittings and restraints as needed.

The contractor may be required to and/or cap water service, water main, blow-off, air cock and other pipe connections three(3) inch or greater in size that are no longer in use and are called out on the plans to be

abandoned. The plug or cap shall be installed as close to the valve, fitting and/or tee as possible or as directed by the Contracting Officer. This item may apply to the abandonment of old fire sprinkler services, old domestic water services, old water main connections, old blow-offs that are cross connected to sanitary sewers and any other connection found to be no longer in use or needed. This item shall apply to all pipes greater than 2" in size and shall include all work, restraints, rodding and incidentals as needed.

D. *MEASUREMENT AND PAYMENT*

Blow Off Manhole, 1-inch Blow-Offs and Air Release Valves and Dig and Plug Existing Connections shall be measured per Each, completely in place.

Blow Off Manhole, 1-inch Blow-Offs, Air Release Valves or Dig and Plugged Existing Connections shall be paid for at the Contract Unit Price as set forth in the Proposal, which price shall include excavation, dewatering, backfill, compaction, materials, tools, labor, equipment, and incidentals necessary to complete the work as specified herein. Payment for all thrust blocks and cast or ductile iron fittings used as part of Item 314.5, Dig and Plug Existing Connection 3" and Larger shall be made using the appropriate pay items for that item.

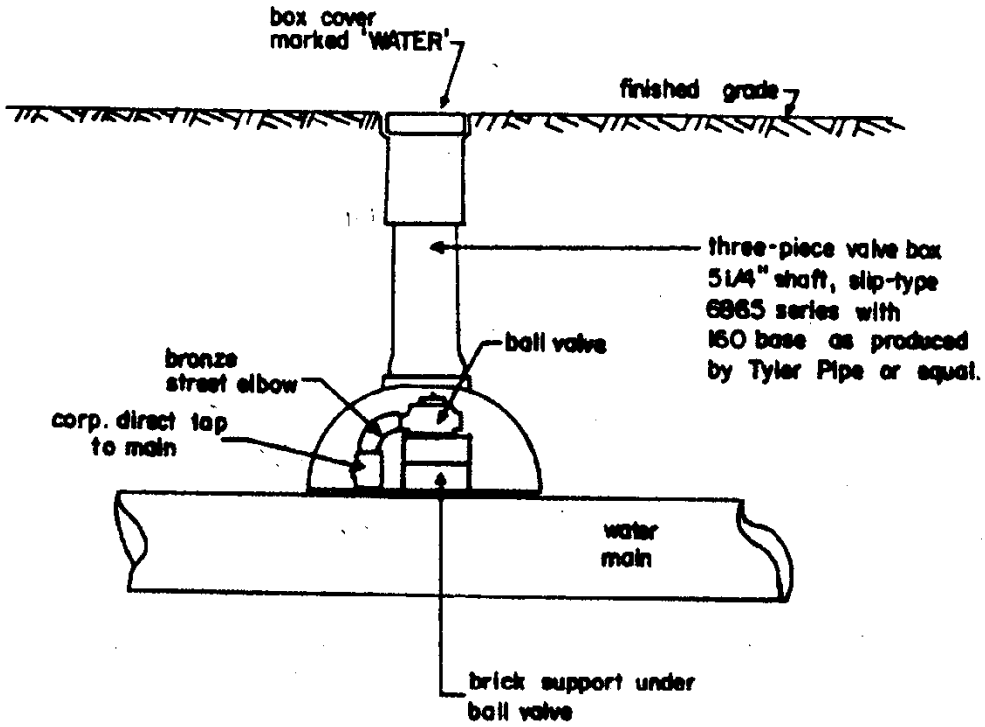

MANUAL AIR RELEASE CITY OF WORCESTER D. P. W. WATER OPERATIONS	REVISION NO.	By	DATE
	1	AVC	4/14/93
	DRAWN By:	PNB	W-13A
	CHECKED By:	MJF	
	DATE:	6/18/92	

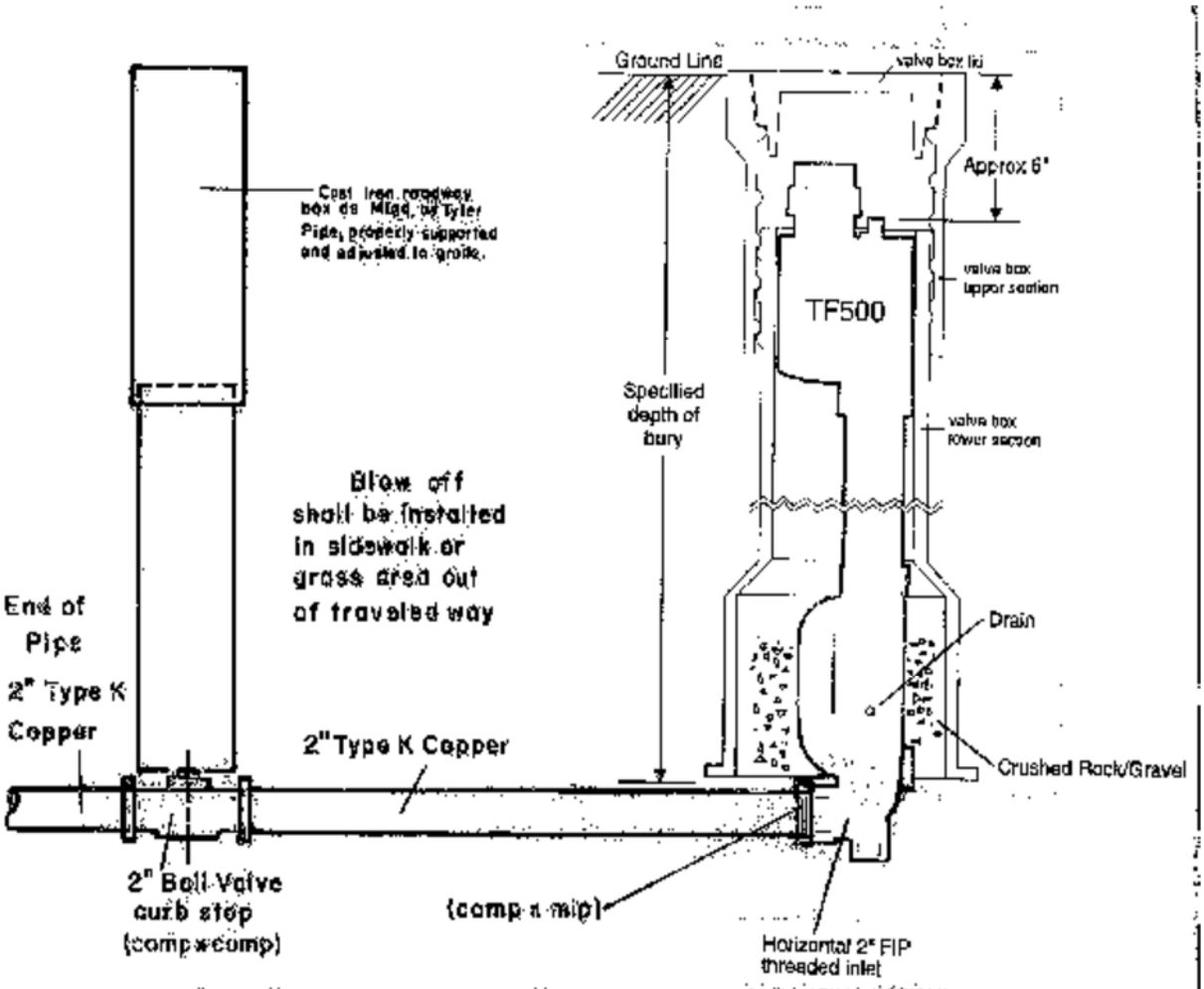

TF500 Specification	Installation Notes
Hydrant shall be " bury, with (2" Vertical FIP / 2" Horizontal FIP inlet and 2" NPT nozzle outlet. Hydrant shall be non-freezing and self-draining. Hydrant shall be operated by turning a top-mounted 9/16" square operating nut counterclockwise to open, clockwise to close. Hydrant must seat the drain outlet in all positions from 1/4-open to fully-open. All internal working parts, the inlet, and the outlet shall be low-lead brass. All working parts shall be serviceable from above with no digging required. All wear parts (o-rings and valve seat) shall be of commonly-available dimensions and materials, and none may be of vendor-unique design. Hydrant shall be the Trufio Model TF500 as manufactured by The Kupferle Foundry Co., St. Louis MO 63102 or equal.	- Insure that the hydrant is free to move vertically within the valve box. In order to prevent the transmission of traffic loads to the hydrant, it should not be jammed or wedged against the valve box ID. - The normal position of the top of the operating nut is about 6" below the top of the valve box, but you can freely adjust this position to suit your circumstances. Just keep in mind that maintenance procedures are best performed when the bolts attaching the top cap are within an easy reach. - Follow the suggestions of the AWWA for hydrant installation. In particular, surround the drain port with a sufficient amount of crushed rock/gravel to provide an adequate drain field.

BLOW OFF / FLUSHING HYDRANT for 2" TYPE K COPPER / END of PIPE CITY of WORCESTER D.P.W.& P. WATER OPERATIONS	REVISION NO. By	DATE
	DRAWN By: P.N.B.	DETAIL
	CHECKED By: A.C.M.	W - 13 C
	DATE: 5/17/07	

48" DIAMETER
PRECAST CONCRETE MANHOLE
O-RING JOINT

Aluminum manhole steps cast in place, Safe Anchor Type Mfg. Alcoa Aluminum Co. # 126538 or equal

All fittings to be Mechanical Joint.

The size of the Blow Off must be approved by Water Operations.

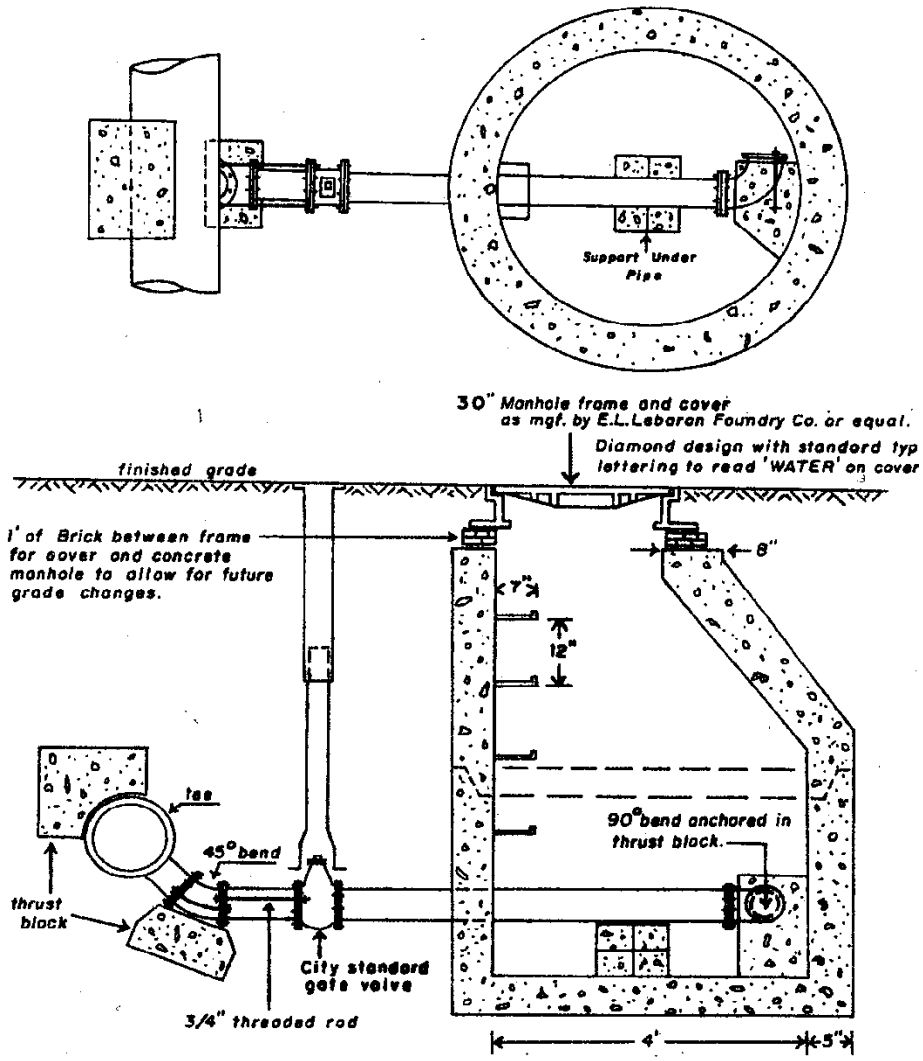

BLOW OFF MANHOLE TYPICAL CITY OF WORCESTER D.P.W. WATER OPERATIONS NO SCALE	REV NO.	DRAWN BY	DATE
	1	AVC	3/31/97
	Drawn By: M.J.F. 11/26/80		W-13
	Checked By: K.E.		
	Re-drawn By: A.V.C. 4/21/93		

ITEM 315 INDICATOR POST

ITEM 315.1 INDICATOR POST EA.

A. ***SCOPE OF WORK***

This work shall consist of furnishing and placing indicator posts at the direction of the Contracting Officer.

B. ***MATERIALS***

All materials shall be in accordance with the Detail Sheet W-16 which is part of these specifications.

C. ***DESIGN AND CONSTRUCTION***

Indicator post shall be a 6 inch iron pipe filled with stones and capped off with cement concrete. Exposed length shall not be less than 4 feet from final grade, and shall be buried for not less than 4 feet. The base around the indicator post will be secured with heavy rocks and poured concrete. The indicator post shall be painted according to the Contracting Officer's instructions, either silver, red or yellow.

Indicator posts shall be located at certain points to serve as a permanent marker for the purposes of locating valves, hydrants and other appurtenances.

Indicator posts shall be located within the City right-of-way but not in the traveled way.

D. ***MEASUREMENT AND PAYMENT***

Indicator Post will be measured per Each completely in place as specified herein.

Indicator Posts will be paid for at the Contract Unit Price as set forth in the Proposal, which price shall include all materials, tools, labor, equipment, and incidentals necessary to complete the work as specified herein.

INDICATOR POST

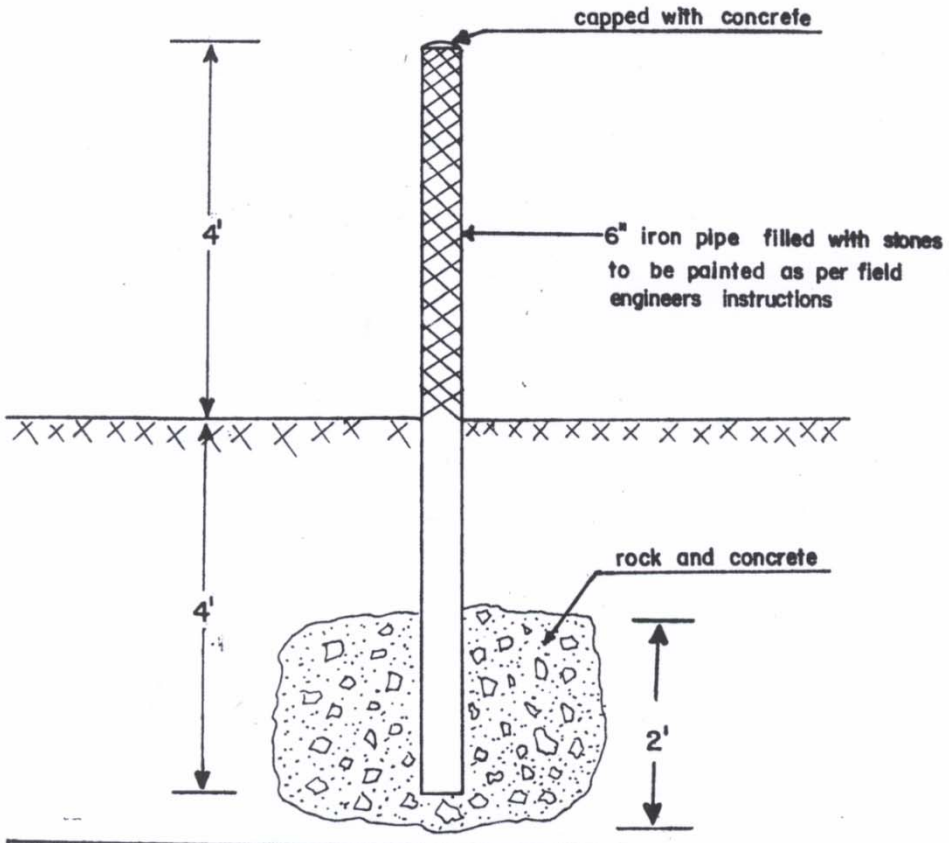

INDICATOR POST DETAIL TYPICAL CITY OF WORCESTER	Rev. No.	By	Date
DEPARTMENT of PUBLIC WORKS NO SCALE WATER OPERATIONS	Drawn By: R.H.&P.N.B.		Detail
	Checked By: A.C.M.		W-16
	Date: 2/24/78		

ITEMS 316 and 317 TEMPORARY BY-PASS-LINES WITH SERVICE HOSES AND TEMPORARY HYDRANTS

ITEM 316.02 TEMPORARY 2" BY-PASS L.F.

ITEM 316.04 TEMPORARY 4" BY-PASS L.F.

ITEM 316.06 TEMPORARY 6" BY-PASS L.F.

ITEM 317 TEMPORARY TAPS ON SERVICE LATERALS EA.

A. *SCOPE OF WORK*

The work under this section shall include furnishing, installing, maintaining and removing temporary by-pass pipes with service hoses and temporary hydrants of the sizes directed to satisfactorily service all dwellings, shops and places of business served by the water mains to be taken out of service for construction. The location and extent of temporary by-pass pipes shall be as shown on the drawings or as directed by the Contracting Officer.

B. *MATERIALS*

All temporary by-pass pipe and other appurtenances shall be fusion welded high density polyethylene (H.D.P.E). Exceptions may be made at the discretion of the project engineer for mechanical fittings at hydrant feed connections or temporary hydrant connections. All non-HDPE materials must be approved in advance. All plastic pipe and hose for service connections shall bear the imprint of the National Sanitary Foundation (NSF) approval for potable water, NSF-PW or shall be capable of meeting the standards established by the NSF for its use.

The pipe materials selected shall be fully adequate to withstand the pressures to which they will be subject to and adequate to withstand whatever forces, such as traffic loading, they will encounter. **All joints for all pipe and hoses shall be watertight.**

Ramp material for driveway crossing or other crossings not set in a trench shall consist of rubber, plastic or other polymer material capable of holding the pipe in place and withstanding expected traffic flow. Cold patch, stone dust or other similar materials will not be allowed under normal conditions as determined by the Contracting Officer.

C. *DESIGN AND CONSTRUCTION*

The minimum allowable size of temporary by-pass pipe shall be two (2) inches.

When any public or private hydrant is taken out of service, the minimum allowable size of temporary by-pass pipe shall be four (4) inches.

The minimum allowable size of any temporary service hose shall be 3/4 inch.

All temporary by-pass pipes shall be laid within the City right-of-way in the traveled portion of the roadway, in the gutter, up against the curbing, unless otherwise directed by the Contracting Officer.

Temporary hydrants shall be installed along the pipe line wherever a public or private hydrant is taken out of service or rendered inoperable due to by-pass connections. All temporary hydrants shall be individually gated; set approximately twenty (20) inches above the ground with the hose connection facing the street at a 90 degree angle to the hydrant riser pipe. The threads on all temporary hydrant hose connections shall be consistent with City of Worcester hydrant specifications.

The temporary by-pass pipes shall have a sufficient number of valves along its length to minimize the number of consumers affected by shutdowns of the temporary by-pass pipes during maintenance and repair. The number and locations of these valves shall be determined by the Contracting Officer.

The temporary by-pass pipes shall have multiple aboveground feed points to provide water at sufficient pressure and volume to supply the temporary by-pass system and to prevent the shutting-off of the entire by-pass piping during maintenance and repair. The Contractor shall be responsible for installing and maintaining any pressure reducing valves (PRV) used when connecting to one of the City's higher pressure zones for a feed to a lower pressure zone. Care shall be taken to assure pressure supplied to businesses or homes does not exceed that which is currently fed to those locations.

The pipe and other materials shall be watertight and care shall be exercised throughout the installation of the temporary pipe making up of all temporary connections to avoid any possible contamination of any City water main, house service or the temporary by-pass itself.

The Contractor shall disinfect and bacteria test all temporary by-pass pipes as outlined in Item 301 of these specifications. The temporary by-pass pipe shall be activated only after negative bacteriological results are obtained from the City.

The Contractor shall maintain unobstructed access to any and all handicapped and wheel chair ramps and curb cuts that are affected by the placement of temporary by-pass pipes by recessing the temporary by-pass pipes into the pavement.

No service hose of any size shall be laid across any street to supply a building that is on the opposite side of the road from the temporary by-pass pipe.

At driveways, provisions shall be made to permit property owners to drive over the temporary pipe by the use of ramps or other approved materials to form a ramp over each of the pipes.

At street crossings, the Contractor shall cut a narrow trench into pavement and the temporary pipe placed in the trench so the top of the pipe is below the surface. Cold patch shall then be placed in the trench and compacted to meet the existing grade of the existing pavement.

All temporary 6” and 8” by-pass lines shall be recessed into the pavement unless otherwise noted. Ramping of 6” and 8” by-pass will not be allowed. Hot patch shall be uses to cover this recessed temporary by-pass.

In certain situations, where the service hoses cannot be laid on the sidewalks due to heavy pedestrian traffic or when there is no access for the service hoses to be brought into the building to be supplied, the Contractor shall dig near the gutter, expose the service pipe, tap into or connect to that service pipe and properly secure the excavation for the duration of the construction. The method of connecting the service hose to the service pipe shall be approved of by the Contracting Officer.

Service hoses, fed from gated connections on the temporary by-pass pipes, shall be of approved size to adequately supply water at sufficient pressure and volume for the needs of building or dwelling affected by the construction.

At the conclusion of their use, the temporary by-pass pipes and service hoses shall be removed and hauled away by the Contractor and any connections, which had been previously interrupted, shall be completely restored by him.

The Contractor shall backfill all excavations and replace the surfacing in full conformity with the requirements previously specified herein. He shall restore the surface of any private property disturbed by him, shall remove all temporary filling adjacent to the temporary pipes and service pipes at driveway and other locations, and shall completely clean all areas which show evidence of his work by hauling away and removing all refuse and other materials which remain after the temporary by-pass pipes and service hoses have been removed. The Contractor must be prepared to supply a self-contained road sweeper to clean all road and driveway surfaces after either cutting temporary by-pass trenches or after final paving of such trenches.

The Contractor shall be responsible for all maintenance and repair of the temporary by-pass pipes and service hoses regardless of the time of day or the day of the week. A 24-hour telephone number shall be supplied to Water Operations by the Contractor along with the name of persons to be notified for repairs or emergencies. Failure to respond shall necessitate the actuation of City crews at the Contractor's expense.

The Contractor shall be required to have his plan for the temporary by-pass pipe layout approved by Water Operations prior to it being installed in the field.

D. *SPECIAL CONDITIONS - FIRE CONNECTIONS*

The Contractor will be responsible for the adequate temporary feed of all fire service lines in accordance with the following:

Fire Systems with Fire Pump

The Contractor will not be allowed to connect to the siamese connection except as noted in item 3 below.

The Contractor shall dig, tap and connect to the fire pipe below grade. The following minimum requirements shall apply depending upon the size of the existing connection.

8-inch fire pipe shall be fed at a minimum with 3 (three) 2-1/2-inch hoses or equivalent

6-inch fire pipe shall be fed at a minimum with 2 (two) 2-1/2-inch hoses or equivalent

4-inch fire pipe shall be fed at a minimum with 1 (one) 2-1/2-inch hose

The Contractor shall provide an additional temporary hydrant on the by-pass system at each building that has a siamese connection. This temporary hydrant connection shall only be used as a feed to the

Siamese connection as an interim fire protection when the contractor is installing new pipe work or valves that require the closure of the existing feed. NOTE: This hydrant is in addition to those required to replace existing hydrants.

The Contractor shall notify the District Chief and Fire Alarm in writing upon installation of the temporary by-pass and schedule a site visit with the District Chief. A copy of this notice shall be provided to the Water Operations' Project Engineer.

The Contractor shall notify the District Chief and Fire Alarm in writing of the date and item for any disconnection of a fire pipe as noted in Item 3 above.

The Contractor shall coordinate with each building owner and the building owner's sprinkler contractor for the connection of the fire service on a temporary basis as outlined in Item 3 above.

Fire Systems without Fire Pump

The Contractor shall install temporary by-pass to the siamese connection. The following requirements shall apply depending upon the size of the existing connection:

8-inch fire pipe shall be fed at a minimum with 2 (two) 2-1/2-inch hoses or equivalent via a wye connection at one connection at the siamese

6-inch fire pipe shall be fed at a minimum with 2 (two) 2-1/2-inch hoses or equivalent via a wye connection at one connection at the siamese

4-inch fire pipe shall be fed at a minimum with 1 (one) 2-1/2-inch hose at the siamese

One nozzle at the siamese connection shall always be available for connection by the Worcester Fire Department.

The Contractor shall notify the District Chief and Fire Alarm in writing upon installation of the temporary by-pass and schedule a site visit with the District Chief. A copy of this notice shall be provided to the Water Operations' Project Engineer.

The Contractor shall coordinate with each building owner and the building owner's sprinkler contractor the disconnection of the fire service on a temporary basis as outlined in Item 3 above.

General Conditions

The contract drawings shall provide the size and location of each known fire pipe impacted by the construction, including side streets, which may require a one-day shut down. However, the Contractor will be required to locate all fire pipes affected by the work. There will be no additional compensation for by-pass of fire pipes not shown on the plans.

The Contractor shall provide temporary connection to fire pipes impacted by a one-day shut down except where buildings are substantially vacant at night or weekends. At these locations a representative of the building owner must be at the building during the shut down period. This may require the work to be performed during off-peak hours.

The by-pass plan submitted shall demonstrate compliance with these provisions.

Buildings that have backup fire service for the entire building that will remain active do not need to be by-passed. The contractor shall coordinate this closure with the building owner.

E. *MEASUREMENT AND PAYMENT*

The length of 2-inch, 4-inch, 6-inch and 8-inch by-pass pipe shall be the number of linear feet, measured along the center line, actually furnished and installed in complete conformance with these Specifications. No payment will be made for any temporary service hoses or pipes which are smaller than 2-inches in size, as will be provided for connections to sill cocks or to house or other services, and no payment will be made for temporary by-pass pipes which are employed by the Contractor solely for his own convenience and use and not as directed and required by the Contracting Officer.

Temporary Taps on Service Laterals shall be measured per Each completely in place as specified herein. There will be no additional compensation made for multiple taps or connections made on a single service line.

Payment at the unit prices stipulated shall compensate the Contractor for all work required in conjunction with furnishing, installing, maintaining, and removing the temporary by-pass pipes and service hoses, together with all valves, fittings, and other facilities required in conjunction with the use of a temporary by-pass pipe to permit dewatering of the mains. Payment at the unit prices shall also compensate the Contractor for all mats or special provisions that may be required at driveways, street crossings, or otherwise for the protection of the temporary

pipe, and to permit the normal flow of traffic and access to private property, and shall also compensate the Contractor for hauling away his material and any refuse of any kind which remains at the conclusion of his operations.

NO EXTRA COMPENSATION WILL BE GIVEN FOR EXCAVATION OR REPAIR OF PAVED SURFACES WHEN EXCAVATED FOR RECESSED BY-PASS PIPING. Unit price per foot shall include all excavation of roadways or private paved surfaces for road crossings, driveway crossings or other recessed bypass. This unit price will include use of both temporary pavement repairs during the course of construction and permanent pavement repairs at the completion of work when used specifically for recessed by-pass trenches.

Temporary Taps on Service Laterals shall be paid for at the Contract Unit Price, which shall include all excavation, backfill, materials, service saddles, plugs, corporations, tools, labor, equipment, shoring and incidentals necessary to complete the work as specified herein. Pavement for temporary tap holes shall be compensated under the appropriate pavement item.

ITEMS 318 through 320 CLEANING AND CEMENT LINING CAST IRON PIPE

ITEM 318.06	**CLEAN AND LINE 6" MAIN**	**L.F.**
ITEM 318.08	**CLEAN AND LINE 8" MAIN**	**L.F.**
ITEM 318.10	**CLEAN AND LINE 10" MAIN**	**L.F.**
ITEM 318.12	**CLEAN AND LINE 12" MAIN**	**L.F.**
ITEM 318.14	**CLEAN AND LINE 14" MAIN**	**L.F.**
ITEM 318.16	**CLEAN AND LINE 16" MAIN**	**L.F.**
ITEM 318.18	**CLEAN AND LINE 18" MAIN**	**L.F.**
ITEM 318.20	**CLEAN AND LINE 20" MAIN**	**L.F.**
ITEM 318.24	**CLEAN AND LINE 24" MAIN**	**L.F.**
ITEM 318.30	**CLEAN AND LINE 30" MAIN**	**L.F.**
ITEM 318.36	**CLEAN AND LINE 36" MAIN**	**L.F.**
ITEM 318.40	**CLEAN AND LINE 40" MAIN**	**L.F.**
ITEM 318.42	**CLEAN AND LINE 42" MAIN**	**L.F.**
ITEM 318.48	**CLEAN AND LINE 48" MAIN**	**L.F.**
ITEM 319.06	**REMOVE EXISTING VALVE AND/OR FITTING & INSTALL 6" CLDI PIPE**	**EA.**
ITEM 319.08	**REMOVE EXISTING VALVE AND/OR FITTING & INSTALL 8" CLDI PIPE**	**EA.**
ITEM 319.10	**REMOVE EXISTING VALVE AND/OR FITTING & INSTALL 10" CLDI PIPE**	**EA.**
ITEM 319.12	**REMOVE EXISTING VALVE AND/OR FITTING & INSTALL 12" CLDI PIPE**	**EA.**
ITEM 319.14	**REMOVE EXISTING VALVE AND/OR FITTING & INSTALL 14" CLDI PIPE**	**EA.**
ITEM 319.16	**REMOVE EXISTING VALVE AND/OR FITTING & INSTALL 16" CLDI PIPE**	**EA.**
ITEM 319.18	**REMOVE EXISTING VALVE AND/OR FITTING & INSTALL 18" CLDI PIPE**	**EA.**
ITEM 319.20	**REMOVE EXISTING VALVE AND/OR FITTING & INSTALL 20" CLDI PIPE**	**EA.**
ITEM 319.24	**REMOVE EXISTING VALVE AND/OR FITTING & INSTALL 24" CLDI PIPE**	**EA.**
ITEM 319.30	**REMOVE EXISTING VALVE AND/OR FITTING & INSTALL 30" CLDI PIPE**	**EA.**
ITEM 319.36	**REMOVE EXISTING VALVE AND/OR FITTING & INSTALL 36" CLDI PIPE**	**EA.**
ITEM 319.40	**REMOVE EXISTING VALVE AND/OR FITTING & INSTALL 40" CLDI PIPE**	**EA.**
ITEM 319.42	**REMOVE EXISTING VALVE AND/OR FITTING & INSTALL 42" CLDI PIPE**	**EA.**
ITEM 319.48	**REMOVE EXISTING VALVE AND/OR FITTING & INSTALL 48" CLDI PIPE**	**EA.**
ITEM 320.0810	**ADDITIONAL OPENINGS FOR 8" TO 10" MAINS**	**EA.**
ITEM 320.1216	**ADDITIONAL OPENINGS FOR 12" TO 16" MAINS**	**EA.**

ITEM 320.1824 ADDITIONAL OPENINGS FOR 18" TO 24" MAINS EA.

ITEM 320.3036 ADDITIONAL OPENINGS FOR 30" TO 36" MAINS EA.

ITEM 320.4048 ADDITIONAL OPENINGS FOR 40" TO 48" MAINS EA.

A. ***SCOPE OF WORK***

The work under this section shall include the cleaning and application of a cement mortar lining to the inside surface of 6-inch and larger new and old steel, ductile iron, and cast-iron water pipelines that have been previously installed and all related work. All work completed under this section shall conform to latest revision of AWWA C602.

B. ***MATERIALS***

All materials used in the cement mortar shall conform to requirements set forth in section 4.3, Materials for Construction, in the latest revision of AWWA C602.

C. ***CONSTRUCTION***

DEWATERING PIPES

The Contractor shall dewater all pipe lines preparatory to the starting of work, drain all low spots, make all excavations at locations required to facilitate the work, and take special precautions to prevent the possibility of any water entering the sections in which men are working.

Water Operations personnel shall operate all valves in connection with work under this Contract unless specified or otherwise directed by the Director of Water/Sewer Operations. If permission is granted to the Contractor to operate valves, the valves must be operated in the presence of a representative of Water Operations. Under no circumstances shall the Contractor be paid any additional compensation for the operation of said valves. The Contractor will not be held responsible for any breakage or damage to said valves, unless in the opinion of the Contracting Officer, proper care was not executed in the operation of the said valve.

All valves that act in the capacity of sectioning or limiting valves for the work and are deemed inoperable and/or leaking by the City to the extent that cleaning and lining cannot be done as a result, shall be replaced by the Contractor with a new Worcester Standard Valve (open right), the necessary pipe and couplings supplied by the Contractor. The City shall make this decision within 24 hours of receiving the Contractor's request in writing through the Contracting Officer.

EMERGENCY SHUTDOWNS

In cases of emergencies, the City reserves the right to suspend the cleaning and/or lining operations at any time or times necessary and to require the Contractor promptly to restore the water main to service. The City will make every effort to avoid such suspension and, if such suspensions are unavoidable, will limit them to the shortest possible time. However, should any suspensions be effected for the above reason, the Contractor shall be allowed extensions of time equal to the delay caused thereby, but he will not be allowed any additional compensation for any losses or damages sustained or alleged to have sustained as a result of such suspensions, except for the actual extra expenses as approved by the Contracting Officer and allowed for in these specifications.

EXCAVATIONS

Pavement cuts shall be made with the edges reasonably smooth and without cracking or damage to the pavement outside the limits of the portion excavated. The excavations shall be as limited as possible, compatible with convenient and safe working conditions, so as to interfere with traffic as little as possible and limit the area to be resurfaced. All excavated materials must be removed and disposed of by the Contractor.

The Contractor shall, without extra compensation, furnish and put in place such sheeting and bracing as may be required, or ordered by the Contracting Officer, to support the sides of the excavation, to prevent undermining of the pavement or to protect from possible injury any pipes, sewers, ducts, poles, conduits, or other structures existing in the streets or highways, and shall remove such sheeting and bracing as the excavation is refilled, unless the Contracting Officer shall permit it to be left in place.

The Contractor shall, without extra compensation, maintain all excavations in proper condition for carrying on the work, and to this end shall do all bailing, draining, or pumping which may be necessary to keep the excavations free of water.

Steel plates used to cover trenches during non-working hours shall be secured to prevent movement, by either pins anchoring them to the roadway, or recessing them into the top grade of the roadway. These plates shall be properly maintained when in use and properly stored away from traveled ways when not in use, at no additional compensation to the Contractor.

PROTECTION OF PIPES AND DRAINS

All existing gas pipes, water pipes, sewers, drains, electrical conduits, telephone ducts, or other structures which are uncovered by the excavation, and which do not, in the opinion of the Contracting Officer require changes in location, shall be carefully supported and protected from injury by the Contractor, and in case of injury, they shall be restored by him without compensation therefore, to as good condition as that which they were found, and shall be kept in repair for the duration of the work.

BACKFILLING

Prompt backfilling and paving of excavations and maintenance thereof shall be considered a priority with the Contracting Officer reserving the right to suspend other work when deemed necessary to accomplish this objective.

After sterilization and pressure testing, and as soon as practicable and approved by the Contracting Officer, each excavation shall be backfilled with approved material, deposited in lifts not more than twelve (12) inches in depth and satisfactorily compacted with pneumatic tampers, each lift to be leveled and thoroughly compacted to the satisfaction of the Contracting Officer before the next lift is deposited. Special care shall be taken to consolidate the earth under the pipes to the satisfaction of the Contracting Officer and the whole work of backfilling shall be done in a manner that shall prevent, as far as possible, subsequent settlement and injury to the pipe. All backfilling shall proceed as specified above and as described in section 200 of these specifications.

TEMPORARY SURFACE REPAIR

All temporary surface repairs shall conform to all the provisions set forth in these specifications.

PERMANENT SURFACE REPAIR

A permanent surface repair shall be made on all excavations or as the Contracting Officer directs upon completion of the major portion of work. The temporary surface repair shall be totally removed, edges cut square and smooth and additional gravel deposited and compacted as required. All permanent surface repairs shall conform to all provisions set forth in these specifications.

The Contractor will be required to make repairs to his trenches within 24 hours of being notified. To accomplish this, the Contractor may employ a local paving Contractor to maintain sunken trenches and additional required paving. The Contractor shall be responsible for trenches dug for a period of two (2) years after completion of work.

CUTTING OR OPENING PIPES

The Contractor shall open the pipe at each end of the section to be cleaned and lined, at intermediate gates, bends, fittings, and obstructions shown on the Contract Drawings and at other locations which may be necessary to permit satisfactory cleaning and lining. Every effort must be made to prevent foreign material or sludge from entering lines adjacent to the work. Open ends of pipe shall be temporarily sealed with mechanical caps or plugs at all times when not being worked on at **no extra compensation** to the Contractor. Openings in the pipes shall be made by burning out existing joints, removing existing couplings or cutting the pipe square and true by hand or machine. The Contractor may salvage and reuse any undamaged pipe, sleeves, or couplings, and any material not so used shall become the property of the Contractor, and shall be disposed of by him. All valves removed and not to be reused must be delivered to 1065 Millbury Street and shall remain the property of the City.

At openings adjacent to sections under pressure or in service, the Contractor shall install adequate blocking to prevent motion of the closed gate valves during the time the pipe is open.

REPAIRING PIPES

The Contractor shall furnish all materials and install same to satisfactorily close and make watertight all openings made in the pipelines under these items. Closures shall be made with cleaned and lined pipe salvaged from the existing line or with new ductile iron cement lined pipe, Class 52 minimum thickness, and with new couplings of approved design. The new couplings used shall be entirely painted with an approved asphaltic material after installation to resist corrosion.

MAIN LINE VALVES

The cleaner and/or lining machine shall not traverse through valves not scheduled for replacement. All valves specified shall be replaced with a new Butterfly Valve or Gate Valve (open right) in accordance with Items 305 through 308 of these specifications.

SERVICES, LATERALS, AND BRANCHES

The Contractor shall be responsible that cleaning debris or cement mortar does not interfere with the operations of air valves, services, laterals, blow-offs, etc. The Contractor shall enter these pipes to plug, and subsequently remove plugs, all mortar and debris from such services, laterals, branches, etc. All sidelines, services, hydrant connections, etc., shall be back flushed into the main immediately after cleaning and before cement lining is applied. After the mortar lining has been placed, but before it takes final set, laterals and services 2-inch and smaller in diameter shall be cleared by back flushing with air. The back flushing shall be performed in a manner that shall not damage the freshly applied cement lining. Service laterals larger than 2 inches or fire lines that do not have accessibility for backflushing immediately after the cleaning/scrapping operations due to check valves or other appurtenances shall require a tap of 2 inch, or greater in size, at a location to be specified by the Contracting Officer outside of the building. Such taps shall conform to the provisions set forth in Item 311 of these specifications.

CLEANING PIPES

The interior surfaces of the pipe to be lined shall be cleaned to the satisfaction of the Contracting Officer by passing approved cleaning apparatus through the pipe in each direction as many times as required to satisfactorily remove all loose scale, rust, tuberculation, projecting jointing materials, loose deteriorated remains of old coating materials and all accumulations of dirt and debris. The cleaning tool may be dragged through the pipe by cables attached to both ends. No hydraulic flushing or cleaning of the debris from pipes will be allowed. The contractor shall dispose of the cleaning water and debris at a site and in a manner as approved by City and State agencies. **All residue shall become the property of the Contractor and lifted from the trench or access pit by a vacuum truck and removed from the site, not disposed of in the pit or trench nor reintroduced in any of the Cities other projects.** The contractor shall take special care to avoid the staining of streets or private property with rust from pipe cleaning operations. No cleaning waste shall be allowed in City drains or sewer lines. Immediately following cleaning operations, streets and affected areas shall be hosed and swept clean of any residue.

CEMENT MORTAR LINING

As soon as possible after a section of pipeline has been cleaned to the satisfaction of the Contracting Officer, cement mortar lining shall be applied to the interior of the pipeline. The Contractor shall not install the lining in any section until approval of the interior surface has been obtained from the Contracting Officer. Immediately before the lining machine travels through a pipeline all foreign material shall be removed. The thickness of the lining shall, at no point, be less than 3/16 inch nor more than 5/16 inch with every effort being made to keep it uniformly between 3/16 inch and 1/4 inch. The lining shall consist of a one-course application of cement mortar and each section shall be placed in uninterrupted continuity by a centrifugal machine projecting the mortar against the wall of the pipe without rebound, and with sufficient velocity to cause the mortar to be densely packed and to adhere in place. Compressed air shall not be used, nor will air or sand pockets, or lack of homogeneity in the lining be permitted. All mortar lining shall be mechanically troweled to produce a lining of uniform thickness with a smooth, finished surface, free of spiral shoulders. The lining machine shall be designed and propelled in such a way that it will travel smoothly through the pipe without variation in speed or rate of application of the cement mortar. Hand placing of mortar shall not be permitted except adjacent to specials or at other points where machine placing is impossible or impractical.

CEMENT MORTAR FOR LINING

The composition of all cement mortar, and the materials from which it is made, shall conform to the latest revision of AWWA C602-00, “Cement Mortar Lining of Water Pipelines In Place – 4 inch and Larger”. The materials and mortar shall be subject to thorough inspection and testing, and any sample failing to meet the above-referenced requirements may be cause for rejection of the whole from which the sample was taken.

CURING OF LINING

Immediately upon the satisfactory completion of the lining of a section of pipeline, that section shall be closed at all openings to prevent the circulation of air. As soon as practicable after the placing of the lining, a sufficient amount of water shall be introduced into that section to keep the lining damp, and under no conditions shall the lining be permitted to dry out prior to returning the section to service.

PROTECTION OF LINING

Every precaution shall be taken to prevent injury to the lining. Should it be damaged or be found unsatisfactory at any time previous to the completion of the project, such damaged or unsatisfactory portions shall be removed to the extent directed, and replaced to the satisfaction of the Contracting Officer.

CLEANING UP

The Contractor shall exercise, and shall cause each of his employees to exercise all responsible precautions to prevent contamination of the pipeline. At the conclusion of the work prior to filling and sterilization, the Contractor shall remove all fragments of mortar and all other debris from the pipeline, leaving it clean and ready for use to the satisfaction of the Contracting Officer.

During the course of the work, the Contractor shall keep the site of his operations in as clean and neat a condition as possible. He shall dispose of all residues resulting from the cleaning of the mains, and at the conclusion of the work, he shall remove and haul away any surplus material, broken pavement, lumber, equipment, and any other refuse remaining from the reconditioning operations, and shall leave the entire site of the work in a neat and orderly condition. He shall satisfactorily repair or restore any driveways, walks, culverts, pipes, fences, walls, poles, posts, curbs, or other property damaged by him or by his employees, and shall leave them in condition to that which existed at the beginning of the work.

CHLORINATION OF WATER MAINS

Upon completion of all cleaning and lining operations in a section of pipe line and after the work has been approved by the Contracting Officer, the Contractor shall chlorinate the completed section in accordance with the AWWA Standard C651-99, “Disinfecting Water Mains.” The Contractor shall furnish all materials, equipment, labor, and chlorine. The entire procedure of chlorinating the pipes shall be discussed in advance of the time the work is to be done, and the methods employed shall be fully satisfactory to the Contracting Officer.

Disinfection shall proceed as specified in Item 301 of these specifications.

GUARANTEE OF CEMENT-MORTAR LINING

The Contractor guarantees that the work to be done under this section shall be done in a good and workmanlike manner in complete conformance with these Specifications, and that the materials furnished by him and used in the construction of the same, shall be free from defects and flaws. This guarantee shall be for a period of one year after final completion and acceptance of the work. It is hereby, however, specifically agreed and understood that this guarantee shall not include any repairs made necessary by any cause or causes other than defective work or materials.

Performance Criterion – Surface Finish: The Contractor guarantees to restore all cleaned and cement-mortar lined water mains to the following coefficients “C” in Hazen-Williams formula, all based on nominal pipe diameters with proper allowance being made for bends and fittings in accordance with accepted practice:

Guaranteed Coefficient "C"	
Nominal Pipe Diameter	**Hazen-Williams Formula**
36 inch	130
30 inch	130
24 inch	130
20 inch	125
18 inch	125
16 inch	125
14 inch	125
12 inch	120
10 inch	115
8 inch	110
6 inch	100

After the mains under this Contract have been cleaned and cement lined, a reputable testing company, independent from the Contractor, shall be hired by the Contractor to perform loss-of-head tests to determine the Hazen-Williams coefficient of friction, called "C." The complete testing as described herein shall be performed at the Contractor's expense. The Testing Company shall be approved by the Contracting Officer prior to the commencement of testing work. The name, address, and a general qualification statement shall be submitted with the material submittals as required by the contract.

If, in any section of cleaned and lined water main, the coefficient "C" as determined by the loss-of-head test fails to meet the guaranteed figure, the Contract price for payment will be described as follows:

For a drop of five (5) points or fraction thereof below the guaranteed coefficient, there will be no reduction in price.

For the next ten (10) points drop in excess of five (5) points below the guaranteed coefficient, the appropriate Contract unit price shall be reduced one percent (1%) per point.

For a drop in excess of fifteen (15) points below the guaranteed coefficient, corrective measures shall take place in order to obtain the desired coefficients as specified herein. Whatever corrective measures are recommended by the Contractor, it shall have prior approval from the Contracting Officer.

For the purpose of establishing "C" coefficient on such mains where it is not practicable to carry the loss-of-head test through the full extent of the cleaned and cement-mortar lined main, the several sections thereof shall be tested and the weighted average coefficient "C" from tests of such portions shall be considered to be acceptable for the whole of the cleaned and cement-mortar lined main.

All tests for establishing the coefficient "C" for water mains cleaned and cement-mortar lined under this Contract will be completed prior to the final acceptance of this job.

In addition to the Hazen-Williams "C" factor tests, the Contracting Officer may deem it necessary to excavate and cut open at a designated location the cleaned and lined pipe for the purpose of a visual examination.

ADDITIONAL OPENINGS AT UNKNOWN BENDS OR FITTINGS

The Contractor shall make additional openings, as directed, in the pipe to be cleaned and lined, if necessary at bends or fittings not shown or noted on the drawings. The complete work of excavation and backfill and opening and repairing the pipe, etc., shall comply with the requirements of these specifications just as though said bend or fitting where shown or noted on the drawings.

VERIFICATION AND TESTING

All materials provided and work performed shall be subject to inspection and testing. The Contractor shall provide, at no additional cost to the City, samples and reasonable assistance for the inspection and testing of materials and workmanship. The City, at its expense shall retain the services of a reputable testing firm to perform tests that include but are not limited to the following: cylinder compression tests

on the cement mortar, slump tests on the freshly mixed cement mortar, gradation analysis of the sand use in the cement mortar.

D. ***MEASUREMENT AND PAYMENT***

Cleaning and Cement Lining of Water Mains shall be measured as the number of linear feet, measured along the centerline, of pipe actually cleaned and lined with cement-mortar in complete conformance with these Specifications.

Payment for "Removing Existing Valve and/or Fitting and Installing Section of CLDI Pipe" under Pay Items 319.06 through 319.48 shall be measure per Each complete in place as specified herein.

Payment for the making of Additional Openings under Pay Items 320.0810 through 320.4048 shall be measured per Each complete in place as specified herein.

Cleaning and Cement Lining of Water Mains shall be paid for at the Contract Unit Price as set forth in the Proposal. The prices stipulated shall include the furnishing of all materials, equipment, and labor necessary to satisfactorily complete the cleaning and lining, dewatering the lines; making and backfilling all excavations; making and repairing all pipe openings, cleaning and lining the pipe; chlorination of pipe; cleaning all gates, services, laterals and branches, video inspection of the cement lined water main and cleaning up the site of work as specified herein.

The Contractor shall be paid the Contract unit prices for each additional opening according to the size of the main so ordered by the Contracting Officer as specified above. The Contract unit prices for the different sizes of mains shall include all excavation, gravel backfill, couplings, and the necessary length of pipe and repairing of the pipe associated with the opening of the pipe as specified above. The specific pay item used shall be determined by the size of pipe being opened.

ITEM 321 TELEVISION INSPECTION OF WATER PIPE

ITEM 321.1 T.V. MAINS L.F.

A. ***SCOPE OF WORK***

Under this item the Contractor shall television inspect cement-lined pipe in accordance with the provisions herein.

B. ***MATERIALS***

Omitted, not applicable.

C. ***CONSTRUCTION***

The Contractor shall television inspect all newly cleaned and cement lined pipe prior to activating the water main. Water Operations shall be allowed two (2) business days to review the tape and determine if the cleaned and cement lined pipe is acceptable prior to granting permission to activate the pipe. Where deemed necessary by unusual conditions, a recording of pipe condition may be requested after cleaning but prior to cement lining of the pipe.

The videotapes furnished to Water Operations shall be **DVD color format** and shall have a distance indicator present throughout the recording. The indicator distance on the recording shall be for general purposes only and NOT for measurement of the cleaned and cement lined pipe. The DVD tape shall also have audio capabilities for comments, as it may deem necessary.

All video recordings shall become the property of the City of Worcester DPW Water Operations.

D. ***MEASUREMENT AND PAYMENT***

The video recording of the pipe condition shall be measured per linear foot as measured for the purpose of payment for cleaning and lining, and shall be recorded with the participation of the Contracting Officer.

The video recording of the water mains shall be included in the price per foot cost of Cleaning and Cement Lining of the pipe. This shall include all labor and equipment necessary to produce the tapes. There shall be no additional compensation for the re-recording of mains whereby the cleaning and/or cement lining was found to be not acceptable by the Contracting Officer.

ITEM 322 through 323 LINE STOPS & INSERTION VALVES

ITEM 322.06 6" INSERTING VALVE EA.

ITEM 322.08 8" INSERTING VALVE EA.

ITEM 322.12 12" INSERTING VALVE EA.

ITEM 323 LINE STOP (VARIOUS SIZES) EA.

A. ***SCOPE OF WORK***

The work under this section shall include furnishing all materials, labor and equipment to properly install and set line stops into the existing water mains at the locations specified on the plans, as specified herein or as directed by the Contracting Officer.

B. ***MATERIALS***

Line Stop Fitting (4" through 16")

The line stop fitting shall consist of a two-part, full encirclement stainless steel saddle with a stainless steel nozzle MIG welded to the upper half of the saddle. It shall include all fasteners and gaskets noted below.

The stainless steel used in the saddle shall be Type 304, with a minimum of 16 gauge (0.0598") thickness.

The line stop nozzle shall be machined from seamless pipe or tubing and shall have an external pipe thread to receive a screwed pipe cap at the end of the work. The interior of the nozzle shall be threaded to receive the completion plug.

The full encirclement saddle gasket shall be molded from an elastomer compound that will resist compression set and is compatible with drinking water in the temperature range of minus 40 degrees to 150 degrees F.

The gasket shall have a molded grid pattern on the surface that seals against the main. The longitudinal ends of the gasket shall be tapered to allow sealing at the lap joint.

Materials for bolts and nuts shall be Type 304 stainless steel.

Cement Concrete for thrust blocks shall conform to all provisions set forth in Item 313 of these specifications.

C. ***DESIGN AND CONSTRUCTION***

The Contractor shall excavate, expose, and clean the exterior of the water main. The outside diameter (O.D.) of the pipe shall be taken to determine the class of the pipe and the corresponding size of the line stop fitting.

All line stop fittings and equipment shall be disinfected with a chlorine solution prior to their installation on and insertion into the water main.

The assembled line stop fitting and valve assembly shall be successfully pressure tested in accordance with the provisions set forth in Item 301 of these specifications prior to the cutting of the pipe.

The existing water mains, upstream of the line stop cannot be shut down or taken out of service. To ensure that the entire operation shall be accomplished without interruption of the upstream water flow, the installation of the line stop shall be accomplished by Contractor personnel skilled and experienced in the procedures specific to line stops of the size on cast iron or ductile iron water mains.

If the existing main is to be cut in the same excavation as the line stop, the Contractor shall be responsible for restraining the line stop fitting. Restraint of the line stop fitting may include yokes, friction clamps, rods, timbers and permanent cement concrete supports or blocking as deemed necessary by the Contracting Officer.

Heavy tuberculation shall be anticipated in the existing water mains. The line stop fitting shall be able to shut down heavily tuberculated water mains through expansion of the rubber stopper itself. Non-expandable stoppers needing a brushing technique are not acceptable.

All natural rubber shall be used in the sealing element allowing customized fit to the inside diameter of the water main to temporarily stop the flow of water in heavily tuberculated mains.

Because of the condition of the interior of the mains and the age of the valves, a "bottle-tight" shut down should not be anticipated. A satisfactory shut down is one that allows the required work to proceed using pumps to dewater the excavation.

In the event that a satisfactory initial shut down cannot be obtained by the line stop, the Contractor shall repeatedly insert and remove the line stop head in an effort to break up the tuberculation or other debris that interferes with a good shut down.

The appropriate water main shall be wet tapped with a shell cutter only after successful installation and pressure testing of the line stop fitting.

The plugging or sealing element shall be inserted into the main by self contained hydraulic equipment.

After successfully completing the line stopping and required water main work the line stop equipment shall be removed, the completion plug installed and the pipe cap or blind flange installed.

D. *MEASUREMENT AND PAYMENT*

Line stops shall be measured per Each completely installed and in place.

Line stops shall be paid for at the contract unit price, which shall include all excavation, shoring, sheeting, restraint rods, yokes, friction clamps, timbers, dewatering, the installation, successful completion, and removal of the line stop, backfilling, labor, equipment, and other incidentals necessary to complete the work. Cement Concrete for thrust blocks, gravel, temporary and permanent bituminous patching shall be paid for at their respective contract unit prices.

ITEM 324 WATER METERS

A. *SCOPE OF WORK*

The work under this section shall consist of furnishing and or maintaining new water meters pits and appurtenances, and removing and replacing of existing water meters and appurtenances, as specified herein, as shown on the plans, or as directed by the Contracting Officer.

B. *MATERIALS*

All water meters shall be shall be purchased through the City of Worcester Water Operations and shall be manufactured to comply in all respects to the latest revision of AWWA Standards C700, C701, C702, and C703 and shall comply with the specific requirements and design standards that follow:

Owners will be responsible to submit to the City, documentation of expected demands within the structure to assist the City with determining proper meter sizing and typing.

C. *DESIGN AND CONSTRUCTION OF METER PIT*

See Sample Detail sheets W-18A which is part of these specifications.

Owners shall be responsible to submit detailed plans to DPW&P Water Operations of all. meter pits of any size, or all meter installations larger than 2” in size in advance for approval by the City.

D. *SPECIAL CONDITIONS*

The property owner and/or his agent shall be responsible to comply with all Federal, State and City cross connection control regulations. The property owner and/or his plumbing contractor and sprinkler contractor shall be responsible to supply design data sheets for all proposed backflow device installations to the City for approval prior to permit approval.

TYPICAL LAWN SPRINKLER METER
INSTALLATION
CITY OF WORCESTER
D.P.W.
WATER OPERATIONS

IMPORTANT:

Consult local codes for appropriate mandatory backflow prevention device to be used in conjunction with lawn sprinkler system.

NOTES:

.1 Both water meters installed by water operations at the owners expense.

.2 Meters will be maintained by water operations.

.3 Lawn sprinklers meters shall be billed water only.

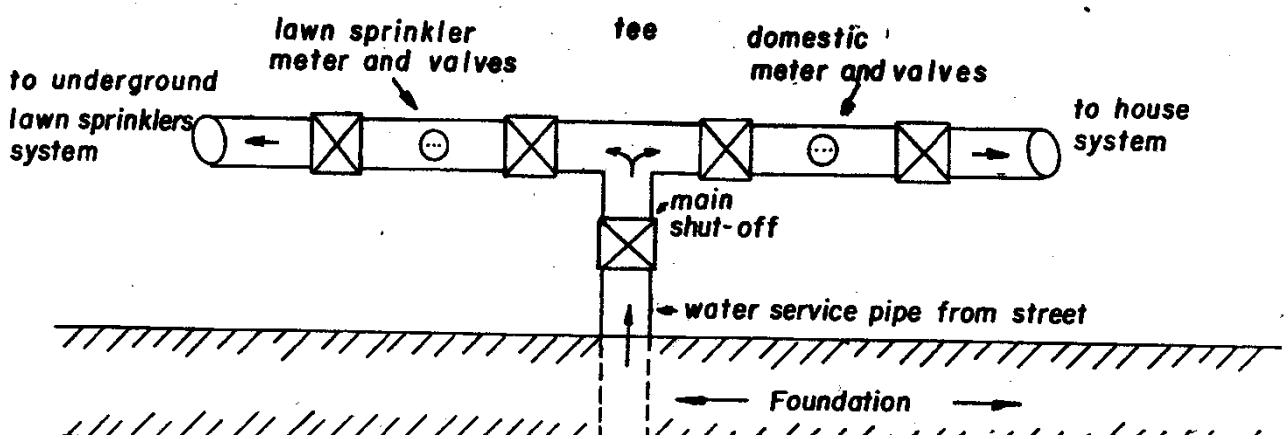

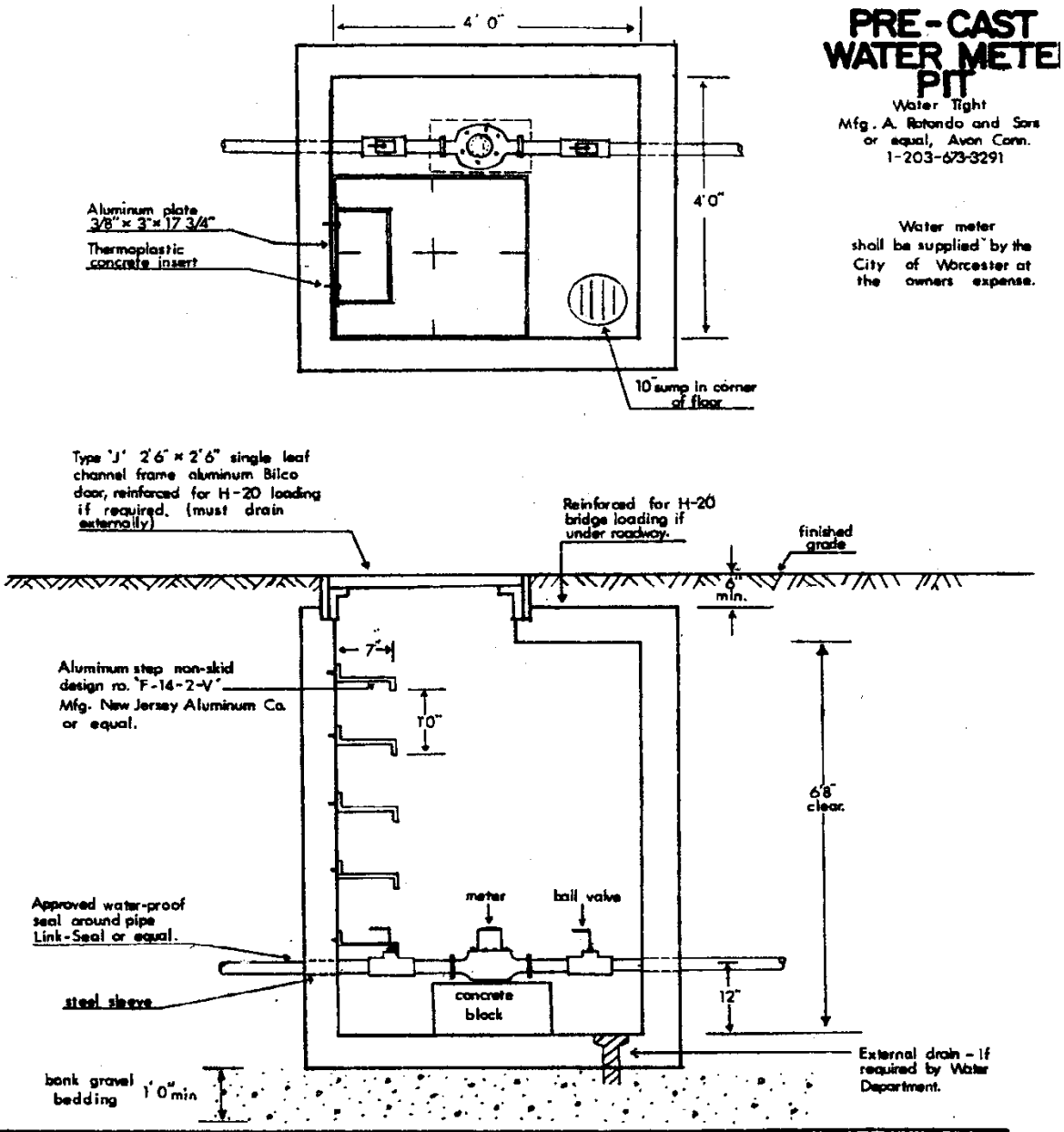

2" METER PIT DETAIL TYPICAL CITY OF WORCESTER D. P. W. WATER OPERATIONS	REVISION NO.	BY	DATE
	DRAWN BY:	MJF	W-18A
	CHECKED BY:	ACM	

SECTION 400 - PAVEMENT

ITEM 402 FINE GRADING, ROLLING AND FINISHING

A. ***GENERAL***

The work to be done under this item shall conform to the applicable provisions of Section 170, (MSSHB). See Detail for Item 116. Centerline and gutter-line grade stakes will be required every 25 feet when working under this item or as directed by the Contracting Officer.

B. ***MEASUREMENT AND PAYMENT***

Payment for fine grading shall be at the bid price per square yard complete in place.

ITEM 403 GRINDING AND MILLING 1-1/2 INCH

A. ***GENERAL***

Description - This work shall consist of preparing a foundation for the placement of surfacing courses by the removal of excess bituminous material to a grade and cross section as directed by the Contracting Officer. The depth of bituminous material removed should average approximately 1-1/2".

Equipment - Equipment for removing the bituminous surface shall be a power operated planing machine or grinder capable of removing, in one pass, a layer of bituminous material 6 feet in width and 1-1/2 inches in depth. The equipment shall be capable of accurately establishing profile grades by referencing from either the existing pavement or from an independent grade control and shall have a positive means for controlling cross slope elevations. The equipment shall also have an effective means for removing excess material from the surface and for preventing any dust resulting from the operations from escaping into the air. The Contractor will be permitted to augment the large milling or grinding equipment with other more maneuverable machines for those areas inaccessible to the 6 foot grinder such as curb or casting cuts.

Construction Methods - The bituminous surface shall be removed to the depth, width, grade, and cross section as shown on the plans, or as directed by the Contracting Officer. Excess material resulting from the operation shall be removed and disposed of by the Contractor or as otherwise specified in the Contract.

B. ***PROSECUTION OF WORK***

All milling or grinding shall be done during daylight hours unless otherwise specified in the Contract.

The Contractor shall exercise due care not to disturb or break existing manholes, valve boxes, catch basins, monument boxes, castings, etc. All castings broken shall be replaced or repaired at the Contractor's expense.

The cutting blade shall be such that the irregularities of the roadway pavement are removed without gouging and the blade can cut to the curb and around all castings when necessary.

C. ***TESTING SURFACE***

The roadway surface shall be considered smooth when tested with a sixteen (16) foot straight edge placed parallel with the longitudinal centerline of the surface. There shall be no deviation from the true surface in excess of one-fourth (1/4") inch. A ten (10) foot straight edge may be used on a vertical curve.

D. ***SWEEPING***

Sweeping shall be done prior to resurfacing where needed as designated by the Contracting Officer.

E. ***RAMPING EDGES***

Immediately after sweeping ground edges at all transitions abutting streets shall be ramped with asphalt as per the discretion of the Engineer. Said asphalt shall be removed just prior to the application of the surface course.

F. ***MEASUREMENT AND PAYMENT***

The method of payment for grinding and milling shall be at the bid price per square yard complete in place.

ITEM 403.1 GRINDING (FULL DEPTH – 6” MAXIMUM)

ITEM 403.11 GRINDING IN-EXCESS OF 6” MAXIMUM

A. ***GENERAL***

Applicable provisions of Item 403 shall apply. The depth of bituminous materials shall be removed to the existing sub-base layer. It is the intent for this item to include the removal of all existing bituminous material including berm and berm mat. Removal of the existing asphalt berm and berm mat shall be done under this item as a subsidiary obligation of the Contractor.

B. ***MEASUREMENT AND PAYMENT***

Payment for the grinding and milling shall be at the bid price per square yard complete in place. Item 403.11 shall be paid in addition to Item 403.1 in areas only where the asphalt depth is greater than 6".

ITEM 403.2 GRINDING AND MILLING 2 INCH

A. ***GENERAL***

Applicable provisions of Item 403 shall apply. This work shall be specified by the Contracting Officer.

B. ***MEASUREMENT AND PAYMENT***

Payment for this Item shall be at the bid price per square yard complete in place including removal of bituminous concrete pavement.

ITEM 404 PULVI-MILLING

A. ***GENERAL***

The work to be done under Item 404 shall include the in-place rehabilitation/recycling of bituminous concrete surfaces. Existing pavement will be scarified, pulverized and re-shaped accordingly into a processed asphalt stabilized base. Excess material above the newly proposed line and grade of the roadway as designated by the Contracting Officer shall become the property of the Contractor. Said material including asphalt berm and berm mat shall be suitably removed from the job site as a subsidiary obligation by the Contractor. All material, work practices and construction procedures must conform to applicable Worcester Department of Public Works specifications.

B. ***PROCEDURES***

The work shall be performed in the following manner:

Existing road pavement shall be scarified to a minimum depth of 9" and mixed with equal amounts of the gravel base existing in the roadway foundation. Pulverization will be by means of a traveling pulvi-miller or equivalent machine capable of ripping through existing asphalt at depths up to 12" with one pass. The machine shall be self-propelled and be equipped with an adjustable grading blade thus leaving its path generally smooth for traffic equipment such as road planers or cold milling machines which are designed to mill or shred the existing bituminous concrete pavement rather than to crush or fracture it, are not considered capable of achieving specification gradation. The required and necessary scraping action of the milling will increase the percentage of fine aggregate. Existing bituminous concrete and gravel base must be ripped and mixed so as to form a homogeneous mass of uniformly processed base material that will bond together when compacted.

The gradation of the processed material shall have a uniform distribution with no pieces exceeding six inches.

The Contractor shall provide a motor grader for leveling of the material so traffic may pass during construction and at the end of the workday.

The Contractor is fully responsible for the assurances that the equipment and construction methods are capable of complying with all specifications.

C. ***MEASUREMENTAND PAYMENT***

The method of payment for pulvi-milling shall be at the bid price per square yard complete in place.

Items 405 through 414 shall be City of Worcester standard curb or edging constructed in conformance with the applicable provisions of Section 501, (MSSHB).

ITEM 405 STRAIGHT CURB (VA-4)

ITEM 408 CIRCULAR CURB (10' RADIUS & OVER) (VA-4)

ITEM 409 CIRCULAR CURB (10" RADIUS & UNDER) (VA-4)

ITEM 410 CIRCULAR CORNER (WORCESTER STANDARD)

ITEM 412 GRANITE EDGE (10' AND OVER) TYPE SB

ITEM 414 GRANITE EDGE (10' AND UNDER) TYPE SB

A. *MEASUREMENTAND PAYMENT*

Items 405, 408, 409, 412, and 414 shall be measured and installed at the price per linear foot bid therefore in the proposal. Removal and re-setting curb corners will be paid for at the contract unit price per linear foot for curb removed and reset. Item 410 shall be paid for per each, complete in place. Where the street is to be pulverized or ground full depth, the curb shall be set prior to placement of the binder course. Should the contractor wish to place the binder prior to the resetting of the curb, no payments shall be made for saw cutting, any levelor course(s) required to bring the crown to grade, or replacement of the binder course at the curb.

Payment for concrete used around curb will be paid for under Item 446.1 Class B Concrete (CY). It will be used at the front, back, and under the joint area to support the curb.

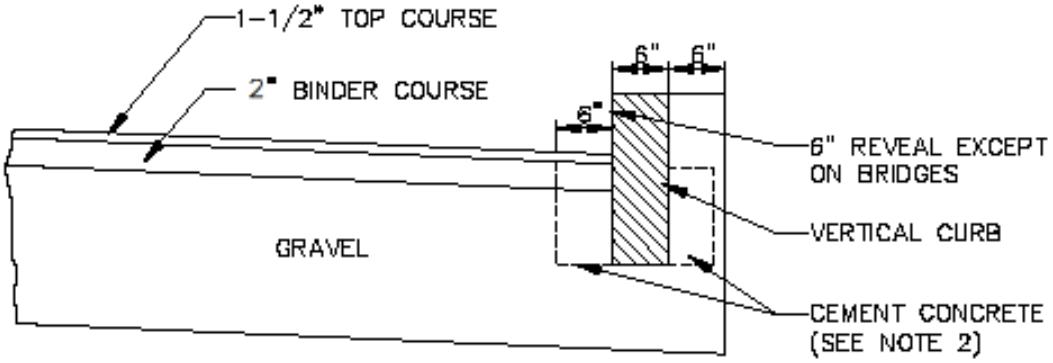

NOTES:

1. CUT NEAT LINE 6" FROM CURB LINE AND REMOVE BINDER, BASE AND STONE, REPLACE WITH CEMENT CONCRETE.

2. ANY CLASS CEMENT CONCRETE THAT IS ACCEPTABLE TO THE DEPARTMENT UNDER SECTION M4 OF THE 1973 STANDARD SPECIFICATIONS. ALL TEST REQUIREMENTS ARE WAIVED. BITUMINOUS CONCRETE SHALL NOT BE USED AS A SUBSTITUTE.

3. PAYMENT FOR CLASS B CONCRETE WILL BE PAID FOR UNDER ITEM 446.1.

METHOD OF SETTING VERTICAL CURB

SEPTEMBER 25, 2009		DEPARTMENT OF PUBLIC WORKS AND PARKS Engineering Division 20 East Worcester St, Worcester MA 01604				
METHOD OF SETTING VERTICAL CURB						
NOT TO SCALE						
SHEET 1 OF 1			1	01/2010	UPDATED TO MATCH REVISED CITY SPECS	CPW
			NO.	DATE	DESCRIPTION	BY

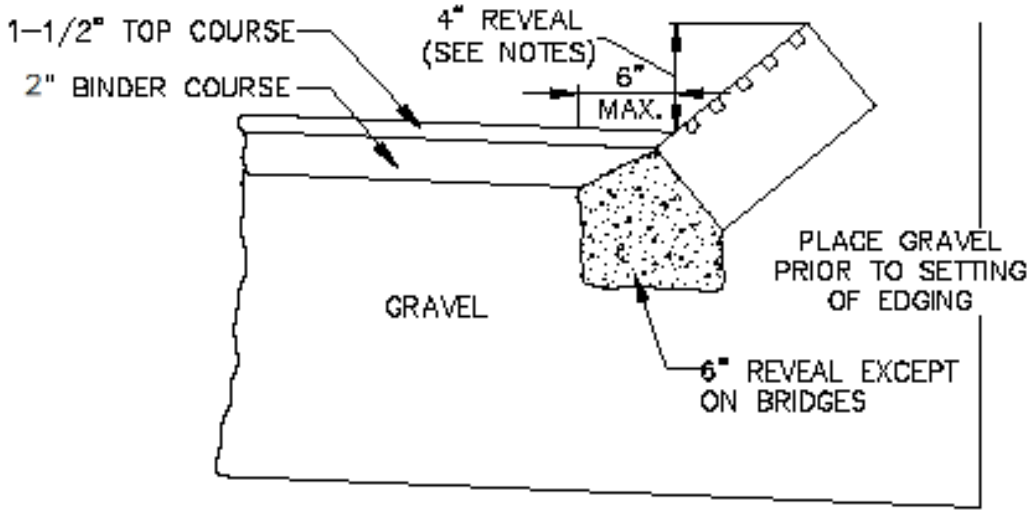

PRE–CAST EDGING

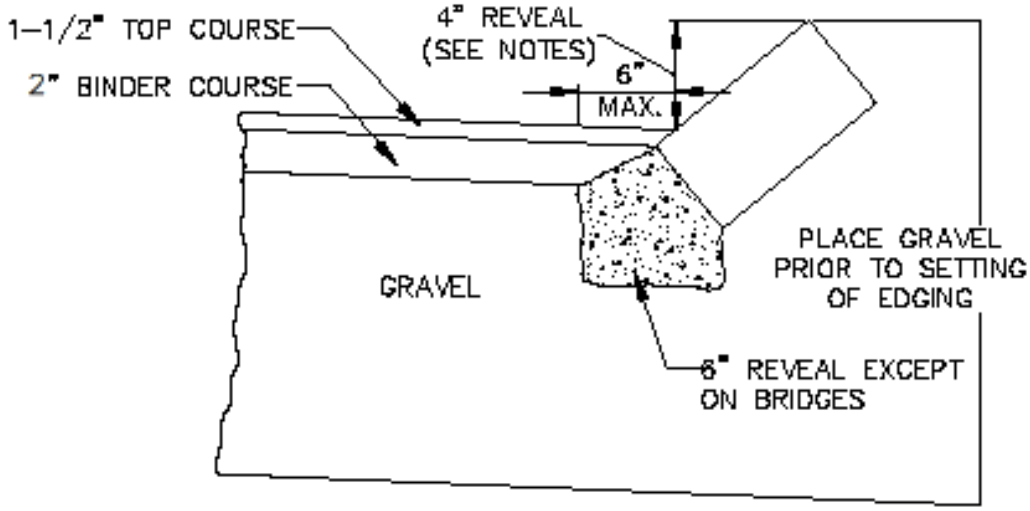

SLOPED GRANITE EDGING

NOTES:

1. ANY CLASS CEMENT CONCRETE THAT IS ACCEPTABLE TO THE DEPARTMENT UNDER SECTION M4 OF THE 1973 STANDARD SPECIFICATIONS. ALL TEST REQUIREMENTS ARE WAIVED. BITUMINOUS CONCRETE SHALL NOT BE USED AS A SUBSTITUTE.
2. PAYMENT FOR CEMENT CONCRETE WILL BE INCLUDED IN THE PRICE PER LINEAL FOOT OF PRE-CAST OR GRANITE EDGING.
3. FOR DETAILS OF PRE-CAST EDGING, SEE 106-40.
4. THE REVEAL SHALL BE 4" UNDER ALL CONDITIONS.

METHOD OF SETTING PRE-CAST CONCRETE EDGING & GRANITE EDGING

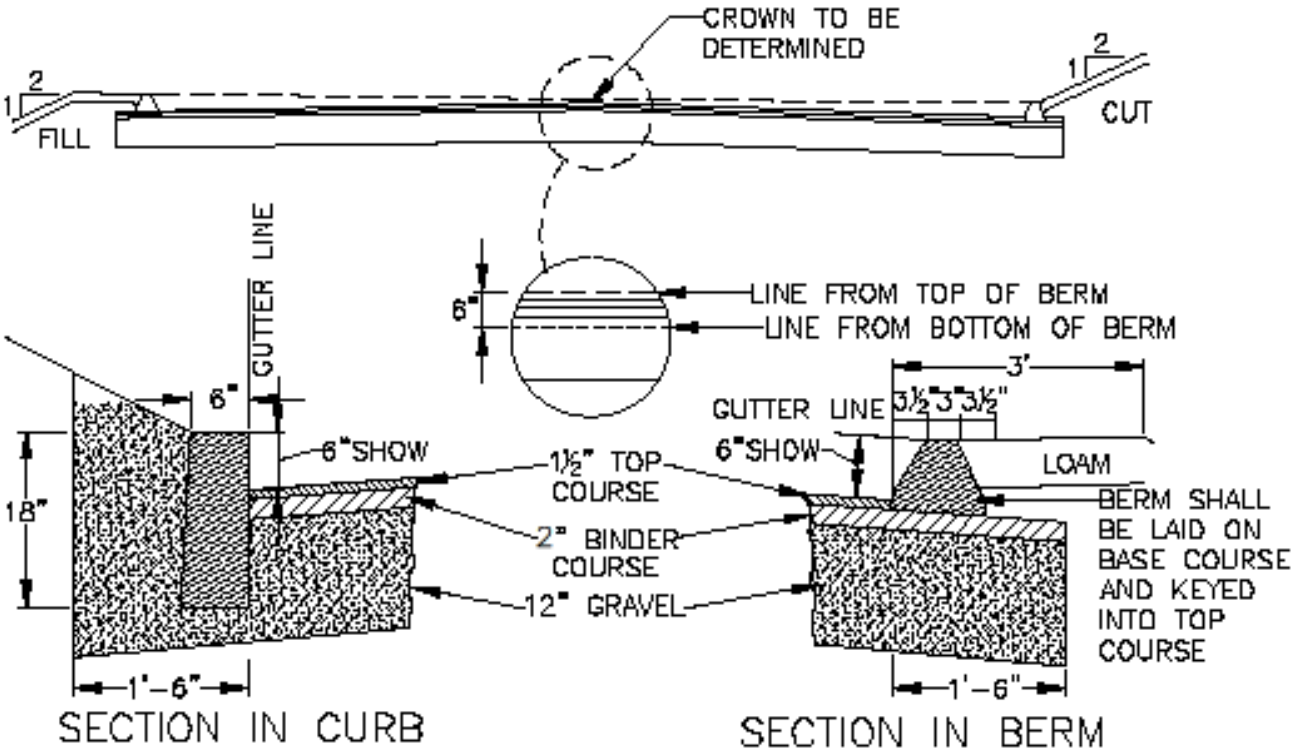

TYPICAL SECTION OF ROAD WITH BERM OR CURB

ITEM 416 CURB REMOVE & RESET

ITEM 417 COBBLESTONE CURB REMOVE & RESET

A. ***GENERAL***

The work to be done under these items shall conform to the applicable provisions of Section 580, (MSSHB). Any disruption of the roadway caused by the Contractor shall be repaired by the Contractor without extra cost to the City. Driveway curb corners that are reset shall be paid for under this item. Where the street is to be pulverized or ground full depth, the curb shall be reset prior to placement of the binder course. Should the contractor wish to place the binder prior to the resetting of the curb, no payments shall be made for saw cutting, any levelor course(s) required to bring the crown to grade, or replacement of the binder course at the curb.

B. ***MEASUREMENTAND PAYMENT***

Payment for Items 416 and 417 shall be measured and installed at the price per linear foot bid therefore in the proposal. Removal and re-setting curb corners will be paid for at the contract unit price per linear foot for curb removed and reset.

ITEM 418 CURB REMOVAL & STACK

A. ***GENERAL***

The work to be done under this item shall conform to the applicable provisions of Section 580, (MSSHB) and will be transported to the Department of Public Works and Parks, 1065 Millbury Street or as directed by the Contracting Officer.

B. ***MEASUREMENTAND PAYMENT***

Payment for Item 418 shall be measured at the price per linear foot bid therefore in the proposal.

ITEM 419 SAW CUTTING OF GRANITE CURB

A. ***GENERAL***

The contractor shall saw cut the granite curb for the installation of sidewalk ramps as specified by the City of Worcester. The saw cut shall be a smooth and continuous cut. The distance between the bottom of the gutter pan and the saw cut section of the granite curb shall be one quarter inch (1/4 in) or less. The slope of the saw cut shall match the slope of the ramp. The point at the top of the curb where it intersects the saw cut shall be ground off, making it a rounder surface. If the granite curb is saw cut, and the previously noted dimensional requirement is not met as determined by the Engineer, the complete curb and gutter shall be removed and replaced at no additional cost to the City of Worcester.

B. ***MEASUREMENTAND PAYMENT***

Payment for this item shall be complete in place, including any necessary regrading, cleanup, and disposal of debris. This item will not relieve the contractor of his responsibility to reset or saw cut the granite curb as required under item 452 or 454. Payment for replacement of the wheel chair ramp surface will be under item 430 Existing Bituminous Concrete Driveway Repair or item 446 Concrete Driveway Repair, when this item is utilized. Payment will be per linear foot, under the item “Saw Cutting of Granite Curb”.

ITEM 420 CURB RESET FROM DPW YARD

A. ***GENERAL***

Work under this item shall consist of the Contractor receiving curbing stored at the Department of Public Works and Parks, 1065 Millbury Street and transporting it to the work site as directed by the Contracting Officer. This curbing will then be reset so as to conform to the applicable provisions of Section 580, (MSSHB) at the desired locations as directed by the Contracting Officer within the work site.

B. ***MEASUREMENTAND PAYMENT***

Payment for this item shall be paid for by Item 416 curb R&R price.

ITEMS 422 - 432 BITUMINOUS CONCRETE

ITEM 422.1 SUPERPAVE 9.5 MM LEVEL 2 (TOP COURSE)

ITEM 422.2 SUPERPAVE 12.5 MM LEVEL 2 (BINDER COURSE)

ITEM 422.3 SUPERPAVE 12.5 MM LEVEL 3 (MODIFIED TOP COURSE)

ITEM 424 BITUMINOUS CONCRETE DRIVEWAY & VARIOUS AREA

ITEM 426 NEW BITUMINOUS CONCRETE SIDEWALKS

ITEM 427 BITUMINOUS CONCRETE WINTER CONDITIONS (HOT BOX)

ITEM 428 BITUMINOUS CONCRETE ROADWAY REPAIR

ITEM 430 EXISTING BITUMINOUS CONCRETE DRIVEWAY REPAIR

ITEM 432 EXISTING BITUMINOUS CONCRETE SIDEWALKS REPAIR

ITEM 432.1 EXISTING BITUMINOUS CONCRETE SIDEWALKS REPAIR < 25 L.F.

The bituminous concrete shall be laid and thoroughly rolled in two courses consisting of a bituminous concrete binder course mix and a top course mix or dense mix to the thickness as indicated below:

	Binder Course	Top Course
Roadway up to 12% grade	2" or As Directed	1.5" or As Directed
Roadway from 12% to 16% grade	2.5"	2" or As Directed
Roadway 16% and over	2.75"	2" or As Directed
Driveway	1.5"	1"
Sidewalk	1"	1"

Under Items 424 through 432 the mix design for sidewalks shall be SUPERPAVE 9.5mm Level 2 for top course and SUPERPAVE 12.5mm Level 2 for binder course. Item 427 will allow for the substitution of non-SUPERPAVE hot mix bituminous concrete if a SUPERPAVE mix is unavailable during winter conditions.

Payment for Items 424 & 426 shall constitute full payment for all labor and materials required to construct bituminous concrete sidewalks or driveways, including all gravel, excavation, fine grading and compacting to the grade specified by the Contracting Officer. No additional payments for these items will be made under their individual bid item prices.

When a substantial grade change is encountered by the Contracting Officer, he will direct the Contractor to establish new grades and pay for additional gravel and fine grading as needed.

Item 428 will be applied to those roadway repairs with a length up to 35 feet, measured parallel to the roadway. This item will be payable by the square yard and will encompass all construction activities involved with the repair of the roadway (Excavation, milling, gravel, berm, etc.). Those repairs with a length greater than 35 feet will be payable under the bid contract unit prices.

When the contractor encounters bituminous asphalt sidewalks and driveways that exceed the City of Worcester standards, gravel may be used in lieu of asphalt. There will be no additional payment for excavating, gravel and fine grading. This applies to Items 430, 432.1.

Any sub-base disturbed by the Contractor without the Contracting Officer's approval shall become the Contractor's responsibility to replace with approved gravel (graded and compacted).

All abutting surfaces of bituminous pavements shall be trimmed to a neat straight line and painted with an asphaltic cement, cutback with naptha or approved emulsion. This work of treating the pavement edges shall be the responsibility of the Contractor and payment for the work shall be covered under the contract price for Items 422 thru 436.

Under Items 430 - 432 any unsatisfactory sub-base, such as red bricks or unsuitable material is encountered in the sidewalk areas, as directed by the Contracting Officer, shall be removed and re-graded and paid for under the Item 116 Excavation, Item 126 Gravel Borrow, and Item 402 Fine Grading, Rolling, and Finishing.

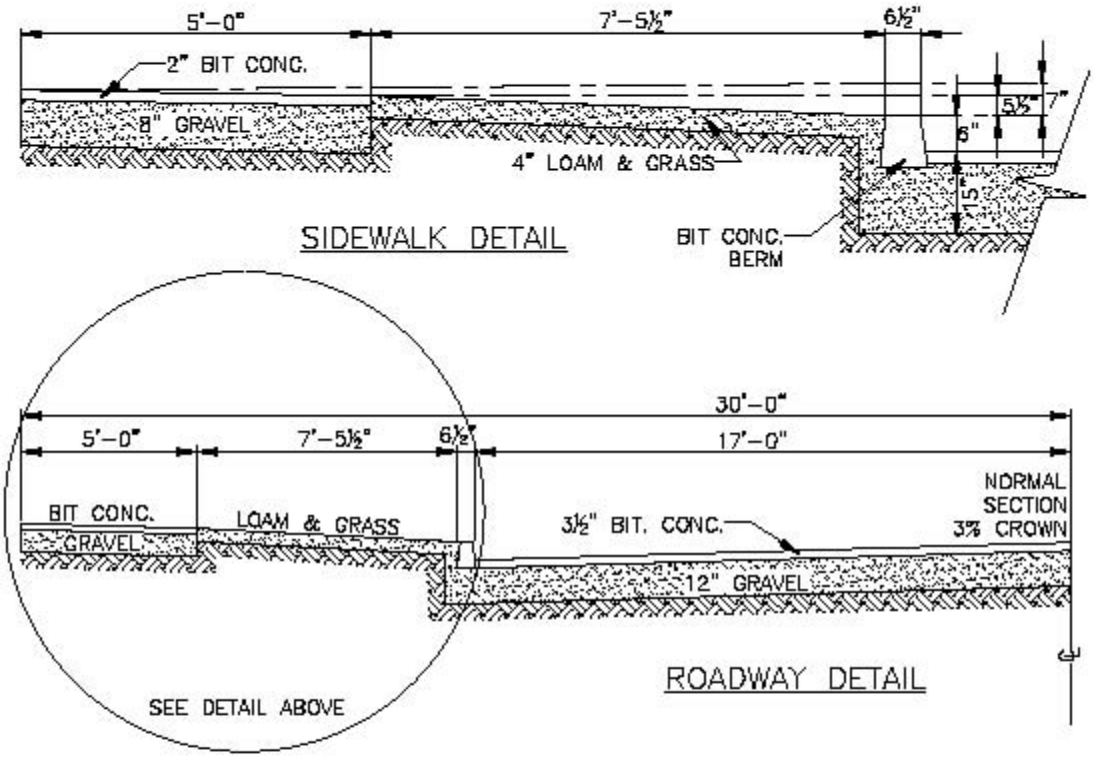

TYPICAL HALF SECTION THROUGH 60' WIDE LOCATION WITH 34' WIDE PAVEMENT

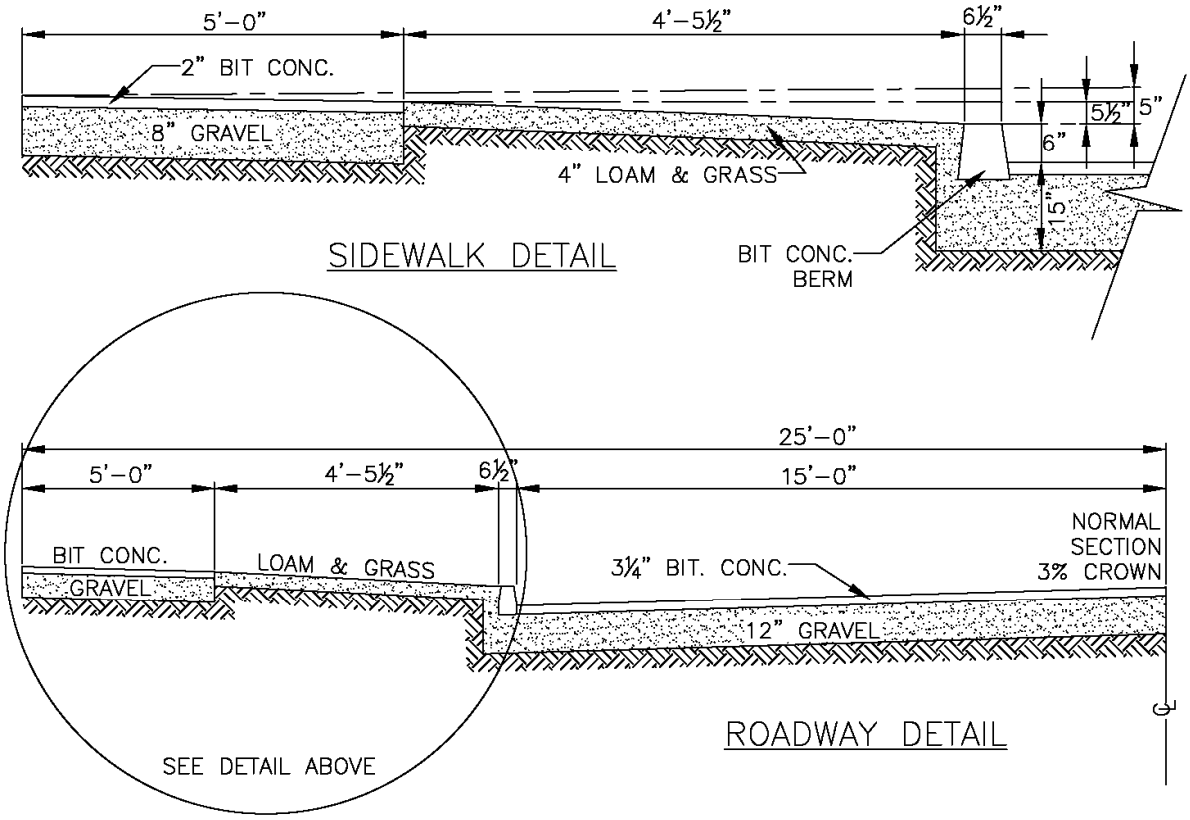

TYPICAL HALF SECTION THROUGH 50' WIDE LOCATION WITH 30' WIDE PAVEMENT

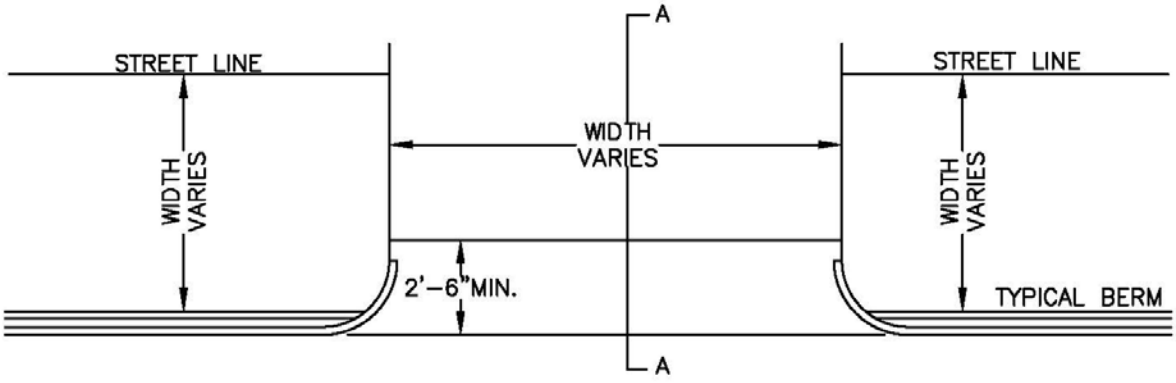

PLAN

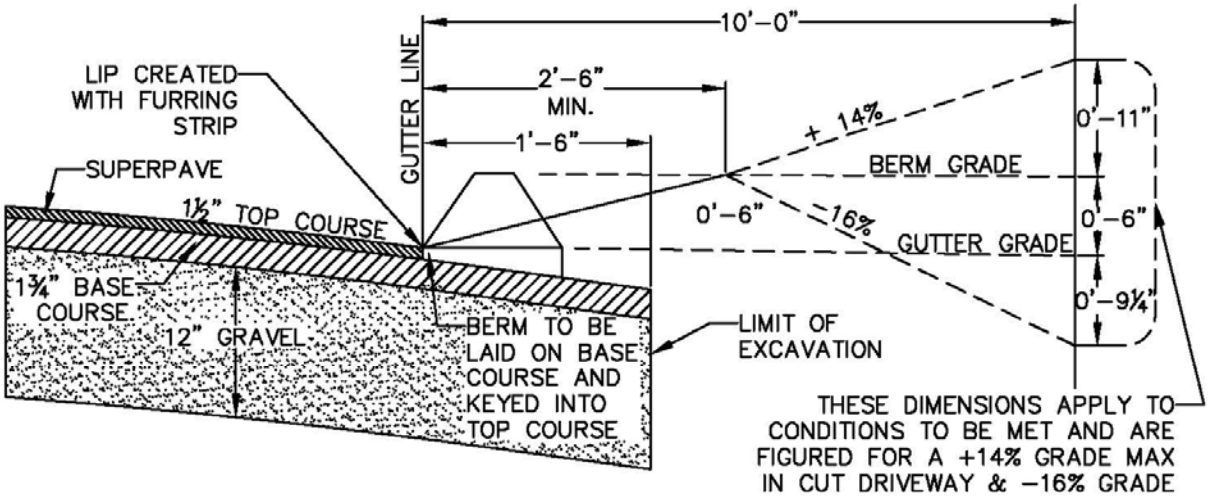

SECTION A–A
NOT TO SCALE

TYPICAL DRIVEWAY

HOT MIX ASPHALT ROADWAY PAVEMENT TON

A. ***DESCRIPTION***

SCOPE

Work under this item shall consist of furnishing hot mix asphalt composed of mineral aggregate and asphalt binder, mixed in a central mixing plant and placed on a prepared course in accordance with these specifications and conformance to the lines, grades, thickness and typical cross sections shown on the plans or as directed by the Engineer. Where reference is made to MHD Standard Specifications, Form 1995 shall apply for section references; latest edition shall apply for specifications.

Each course shall be constructed to the depth, typical section, or elevation required by the contract and/or plans and shall be rolled, finished, and approved before the placement of the next course. Each course shall be placed to a smooth, dense and uniform appearance.

Many state agencies are implementing Quality Assurance specifications. It is the intent of these municipal quality-based HMA specifications to move toward the goal of quality assurance implementation but tailored toward the real world of municipal construction. To that end, the Contractor is required to establish, provide, and maintain a Quality Control System (QCS) that will detail the methods and procedures that will be taken to assure that all materials and completed construction conform to project specifications, plans, technical specifications and other requirements, whether manufactured or processed by the Contractor or procured from subcontractors or vendors.

B. ***QUALITY ASSURANCE***

The Contractor assumes the responsibility of the quality for all materials and construction incorporated into the work and will control all the processes leading to the final result through this function. Quality Control activities should include:

1. Maintain a Contractor Quality Control System
2. Proficiency testing prior to/during production with Engineer
3. Inspection and Testing of Hot Mix Asphalt Production
4. Inspection and Testing of Hot Mix Asphalt Placement

See Section G "Contractor Quality Control of HMA Pavement" of these specifications for additional information.

The City of Worcester or their authorized agent will perform the Quality Acceptance function for this work. All material will be considered for acceptance through a sampling, testing and inspection program performed by the Engineer or their agent. Quality Acceptance activities include:

1. Proficiency testing prior to/during production with Contractor,
2. Inspection of HMA Production Plant and Testing Laboratory.
3. Production Trials of HMA Products Intended for Use in the City of Worcester.
4. Inspection/Testing for Acceptance of Hot Mix Asphalt Production
5. Inspection/Testing for Acceptance of Hot Mix Asphalt Placement
6. HMA Quality Acceptance Report of Activities

C. ***MATERIALS***

Aggregate – Aggregate shall meet the requirements of MHD M3.11.04 latest edition of the Standard Specifications and as further stipulated herein.

1. Coarse Aggregate

   The sodium sulfate soundness loss shall not exceed nine (9) percent, nor the magnesium soundness loss exceed twelve (12) percent, after five cycles, when tested in accordance with AASHTO T104.

   The coarse aggregate shall not contain more than one (1) percent of material such as crusher dust, sand or soft, disintegrated pieces. The coarse aggregate shall not contain more than ten (10) percent, by weight, of flat or elongated pieces, when tested in accordance with ASTM D4791 at a ratio of 5:1.

   For the Marshall mixes contained in Table 6, the coarse aggregate shall contain a minimum of 75% by weight having at least two or more fractured faces and 85% by weight having at least one fractured face for the base and intermediate courses, when tested in accordance with ASTM D5821. The surface

courses in Table 6 shall contain a minimum of 85% by weight having at least two or more fractured faces and 95% by weight having at least on fractured face, when tested in accordance with ASTM D5821. When two fractured faces are continuous, the angle between the planes of fracture shall be as least 30 degrees to count as two fractured faces. For the Superpave mixes contained in Table 5, the coarse aggregate shall conform to the coarse aggregate angularity requirements listed in Table 3 for the traffic level and depth within the pavement structure.

The use of steel slag or blast furnace slag shall not be permitted as a coarse aggregate.

2. Fine Aggregate

Fine aggregate shall consist of clean, sound, durable, angular particles produced by crushing natural stone, or gravel that meets the requirements for wear and soundness specified for the coarse aggregate. The aggregate particles shall be free from coatings of clay, silt, or other objectionable matter and shall contain no clay balls. The combined materials that passed the No. 100 mesh sieve shall not have sufficient plasticity to permit the performing of the plastic limit test using AASHTO T90.

Fine aggregates shall have sand equivalent values of 40 or greater when tested in accordance with AASHTO T176. The sand equivalent value shall be determined for the combined mix aggregates, including coarse and fine aggregates and mineral filler portions.

Natural (non-manufactured) sand may be used to obtain the gradation of the aggregate blend or to improve the workability of the mix. The amount of sand to be added will be adjusted to produce mixtures conforming to requirements of this specification. The aggregate shall have a fine aggregate angularity value of 40% or greater when tested in accordance with AASHTO T304, Method A. The uncompacted void content shall be evaluated for the combined mix aggregates including both coarse and fine aggregate portions.

3. Mineral Filler

If filler, in addition to that naturally present in the aggregate, is necessary, it shall meet the requirements of AASHTO M17.

HMA mixtures shall contain a dust to effective asphalt ratio by mass between 0.6 and 1.2. For Superpave designed mixtures, mixtures that pass beneath the Primary Control Sieve (PCS) control point established by AASHTO M323 may contain a dust to effective asphalt ratio by mass between 0.8 and 1.6.

4. Reclaimed Asphalt Pavement (RAP)

The use of a maximum of 15% recycled asphalt pavement (RAP) will be allowed in the HMA courses.

The RAP, incorporated into the HMA mixtures, shall be maintained as a separate captive stockpile and shall not be added to without prior approval. RAP shall consist of asphalt pavement recovered by cold milling or other removal techniques. The RAP shall be crushed so that 100 percent passes the maximum aggregate size of the HMA mix in which it will be used. The Contractor's Quality Control system shall assure that the RAP is free from detrimental amounts of contaminating substances such as joint seal compound and, is reasonably uniformly graded from fine to coarse.

The coarse aggregate in the RAP shall be crushed stone and the top-size shall not exceed the maximum aggregate size established by the JMF. The final HMA mixture containing RAP shall conform to all the specification requirements contained herein.

For mixtures containing 15% or less RAP, the asphalt binder shall be a PG 64-28 or PG 64-22. RAP content shall not exceed 15%.

The laboratory RAP-virgin binder blend viscosity value established from the RTFO residue at 140°F (60°C) shall establish the maximum viscosity allowed for the binder after discharge from the HMA plant and/or silo storage, if applicable, when recovered by AASHTO T170 and tested in accordance with AASHTO T202 and AASHTO T316.

For design purposes, the specific gravity of the combined aggregate blend with RAP used in a HMA mixture shall be determined in accordance with the attached test method for BULK SPECIFIC GRAVITY OF AGGREGATE BLENDS WITH RAP.

Sampling and Testing

All aggregate samples required for testing shall be furnished by the Contractor when requested. AASHTO-T2 shall be used in sampling coarse aggregate and fine aggregate, and AASHTO T127 shall be used in sampling mineral filler. All tests for initial aggregate submittals necessary to determine compliance with requirements

specified herein will be conducted by the Contractor under their Quality Control System. No aggregate shall be used in the production of mixtures without prior approval.

Sources of Supply

Sources of aggregate shall be selected well in advance of the time the materials are required in the work. Preliminary approval may be given when the materials are obtained from a previously approved source or an existing quarry source producing aggregates that has a satisfactory service record in hot mix asphalt construction for at least five years. Samples shall be submitted upon contract award. When time permits, samples shall be submitted fourteen days prior to the start of production. An inspection of the producers operation will be made by the Engineer. When new sources are to be developed, the Contractor shall indicate the sources and submit a plan of operation thirty days in advance of starting production. Samples from test pits, borings and other excavations shall be submitted at the same time. Approval of the source of aggregate does not relieve the Contractor in any way of the responsibility for delivery at the job site of aggregates that meet the requirements specified herein.

Samples

Samples of aggregates shall be furnished by the Contractor at the start of production and at intervals during production of HMA mixtures. The intervals and points of sampling will be designated by the Engineer.

ASPHALT BINDER MATERIAL - The types, grades, and controlling specifications, the maximum mixing temperatures and compaction temperatures for the asphalt binder materials shall conform to the following:

Performance Graded Asphalt Binder: The Asphalt Binder shall be a Performance Graded Asphalt Binder (PGAB) which meets the specification requirements of AASHTO M320 and AASHTO R29. Acceptance of the PGAB will be in accordance with AASHTO R26 “Standard Practice for Certifying Suppliers of Performance Graded Asphalt Binders”. PGAB shall be provided by an Approved Supplier (AS) under the Approved Supplier Certification (ASC) system.

THE PGAB GRADE SELECTED FOR THIS WORK IS PG 64-28 or 64 -22 - If traffic speed and/or level warrant, the PGAB may be adjusted by the Engineer for the design traffic conditions in accordance with the table below. **No chemically modified PGAB shall be used on this project.**

Table 1. SUPERPAVE PGAB Adjustment for Design Traffic Conditions

Traffic Loading	Adjustment to PGAB Grade
Standing <12mph(<20 km/h)	Increase high temperature grade by 2 grades (12° C), or 76-XX. Use low temperature grade as determined by LTTP BIND software.
Slow Transient 12 to 44mph(20 to 70 km/h)	Increase high temperature grade by 1 grade (6° C), or 70-XX. Use low temperature grade as determined by LTTP BIND software.

Traffic Level (ESALs)	Adjustment to PGAB Grade
1×10^7 to 3×10^7	Consideration should be given to increasing high temperature grade by 1 grade (6° C), or 70-XX. Use low temperature grade as determined by LTPP BIND software
$>3 \times 10^7$	Increase high temperature grade by 1 grade (6° C), or 70-XX. Use low temperature grade as determined by LTTP BIND software.

1. A separate JMF with TSR results shall be submitted for each PGAB grade proposed for use on this project.
2. Limit one binder grade per production day unless otherwise adjusted by the Engineer for the City of Worcester traffic conditions.
3. Documentation of the type of binder used per production day is to be stated on the weigh slips.

The Contractor shall furnish manufacturers' certified test reports for each carload or equivalent of binder shipped to the project as well as applicable Materials Certificates for the shipment of each carload or equivalent to the production plant. The reports shall be delivered to the Engineer before production of the HMA. The furnishing of the vendor's certified test reports and material certificates for the PGAB material can be used as the basis for final acceptance of the bituminous material, or, tested by the Engineer. If the Engineer elects to test the binder material at their costs, then the Contractor shall set aside one (1) 1-qt samples of the asphalt binder material obtained from each truckload, shipment, or equivalent of asphalt binder material shipped to the production facility. Each sample shall be labeled with the PG grade, source and batch number, quantity, project name, plant, date, and the sampling inspector. The Contractor shall maintain documentation in the form of a Materials Certificate of each shipment, with a copy attached to each quart sample.

After receiving the quart samples, obtained by the Contractor, the Engineer may test the samples for verification of the performance grade. Material shall conform to the specification requirements for the applicable performance grade as specified herein. Material not conforming to specification requirements shall be subject to corrective action, production suspension, rejection, removal, or reduced payment as determined by the Engineer.

The blending at the HMA plants of PG binder from different suppliers is strictly prohibited. Contractors may switch to another approved source of PG binder, upon written notification to the Engineer, and by certifying that the tank to be utilized has been drained to an un-pumpable condition. The tank shall not retain more than 0.5% in volume capacity of previous residue source. Contractors who blend PG binders will be reclassified as a supplier and required to certify the binder in accordance with AASHTO M320 and AASHTO R26. Also if any modifications, blending, or addition of additives occurs, the Contractor shall re-certify the material in accordance with AASHTO M320 and AASHTO R26.

A copy of the Certified Test Reports shall be provided in accordance with the frequency requirements established in the latest version of AASHTO M320, and shall include the following:

1. Flash point
2. Rotational viscosity at 275°F and 329°F
3. Specific gravity at 77°F
4. Original G*/sinδ and phase angle at test temperature
5. RTFO percent mass loss
6. RTFO - G*/sinδ and phase angle at test temperature
7. PAV Residue - G*(sinδ) and phase angle at test temperature
8. Creep stiffness and m-value at test temperature
9. Direct tension results (when equipment available)
10. Strain sweep in accordance with AASHTO T315 (optional)
11. Physical hardening after 24 hours in accordance with AASHTO T313 (optional)

Asphalt Binder Anti-Stripping Additive - This specification provides for an additive to asphalt to assist in the coating of wet aggregate and to increase the resistance of the binder coating to stripping in the presence of water. The additive shall be chemically inert to asphalt (heat stable) and when blended with asphalt shall withstand storage at a temperature of 400°F (204°C) for extended periods without loss-of effectiveness.

Composition: Anti-stripping compound shall be an organic chemical compound, free from inorganic mineral salts or inorganic mineral soaps. It shall contain no ingredient harmful to the binder material or to the operator, and shall not appreciably alter the specified characteristics of the binder material.

Anti-stripping additive shall be incorporated and thoroughly dispersed in the asphalt binder material in an amount equal to the percent by weight established by the job mix formula. This percent is based on the efficiency of the additive as determined by laboratory tests. The treated composite mixture shall have a minimum tensile strength ratio (TSR) of not less than 80, when tested in accordance with AASHTO T283 with the freeze/thaw cycle. The specimens for the AASHTO procedure shall be 4” (100mm) in diameter, compacted with the Marshall hammer or the Superpave gyratory compactor to the desired air void level of 7.0 $\pm$ 1.0%. If the TSR ratio is less than 80, the aggregates shall be treated with an approved antistrip in sufficient quantity to produce acceptable results. The hot mix asphalt materials and asphalt binder material that require antistrip additives (either liquid or mineral) shall continue to meet all requirements specified herein for binder and HMA. The anti-strip agent shall be included in the bid price.

Tack Coat: Emulsified asphalt; AASHTO M140/ASTM D 997 or AASHTO M 208/ASTM D 2397, RS-1 or CRS-1

PRELIMINARY MATERIAL ACCEPTANCE - Prior to delivery of HMA materials to the job site, the Contractor shall submit certified test reports to the Engineer for the following materials certified under the Contractor's quality control system:

Coarse Aggregate

1. Percent of wear
2. Soundness
3. Flat and Elongated
4. Coarse aggregate angularity

Fine Aggregate

1. Liquid limit
2. Plastic index
3. Sand equivalent
4. Fine aggregate angularity

Mineral Filler

Performance Graded Asphalt Binder: The certification(s) shall show the appropriate AASHTO and/or ASTM test(s) for each material, the test results, and a signed statement that the material meets the specification requirement.

The Engineer may request samples for testing, including but not limited to, modifiers, truck coatings, and emulsion, prior to and during production, to verify the quality of the materials and to ensure conformance with the applicable specifications.

D. *COMPOSITION OF HMA MIXTURES*

Hot Mix Asphalt - HMA plant mix may be composed of a homogeneous mixture of aggregate, filler if required, bitumen, and/or additives, combined to meet the composition limits by weight and other characteristics as specified. The several aggregate fractions shall be sized, uniformly graded and combined in such proportions that the resulting mixture meets the grading requirements of these specifications.

Hot Mix Asphalt Mix Design - The Contractor shall be responsible for the development of all job mix formulas. All job mix formulas other than for Surface Treatment and Base mix shall be based on and supported by volumetric mix designs, either Marshall Method or Superpave method. Marshall Mix design method, procedures and criteria shall be based on Asphalt Institute MS-2 and AASHTO T245 and the requirements contained herein. At the option of the Contractor, or as specified by the Engineer, Superpave mix designs may be utilized. Superpave mix designs shall be based on Asphalt Institute SP-2 and AASHTO M323, R35, R30, T312, and the requirements contained herein. For the Superpave volumetric mix design, the mixture of asphalt and aggregate shall be oven aged at the mixture's specified compaction temperature in accordance with AASHTO R30.

JOB MIX FORMULA (JMF) - Work shall not begin nor shall any mixture be accepted until the Contractor has submitted a job mix formula, samples of the existing and new materials intended for use, and has established a separate, job mix formula (JMF) for each mixture. A separate job mix formula shall be submitted for each mixture and each approved RAP stockpile (the stockpile shall be of a uniform quality throughout).

JMF Submittal - The job mix formula shall establish the percentage of each additional aggregate required, a single percentage of aggregate passing each required sieve size, a single percentage and the grade of asphalt binder to be added, the percentage of recycling additive, and a single temperature at which the mixture is to be discharged from the plant, and the number of seconds for dry mixing time and the number of seconds for wet mixing time. AASHO-T195 (Ross Count) with a coating factor of ninety-eight (98) percent will be used when necessary to evaluate proper mixing time. The moisture content of all hot mix asphalt upon discharge from the mixer shall not exceed 0.5 percent when tested in accordance with AASHTO T110. The job mix formula shall also specify a single source or uniform blend of particular sources for fine aggregate, a single source for each nominal size of coarse aggregate, and a single source of supply for mineral filler and for asphalt. The JMF shall be submitted in writing by the Contractor to the Engineer at least 30 days prior to the start of paving operations and shall include as a minimum:

a. Percentage of each individual aggregate and percent passing each sieve. Combined percent passing each sieve size and target gradation desired.

b. Percent of asphalt binder.

c. Performance grading test results and Material Certificate certifying the PG grade.

d. Number of gyrations for the estimated design ESAL loading.

e. Mixing temperature.

f. Compaction temperature.

g. Temperature of mix when discharged from the mixer.

h. Plot of the combined gradation on the Federal Highway Administration (FHWA) 0.45 power gradation curve.

i. Percent natural sand.

j. Percent fractured faces.

k. Percent flat or elongated particles.

l. Tensile Strength Ratio (TSR).

m. Antistrip agent – type and quantity.

n. Sand equivalent value.

o. Fine aggregate angularity value.

p. Percentage of wear.

q. Sulfate soundness loss.

r. Individual and combined aggregate specific gravity.

s. Dust to effective asphalt ratio.

t. Graphical plot of air voids, voids in mineral aggregate (VMA), and voids filled with asphalt (VFA) versus asphalt content. The Superpave mixes shall also show density at $N_{initial}$, density at N_{design}, and density at $N_{maximum}$ versus asphalt content.

The Contractor shall submit samples to the Engineer, upon request, for JMF verification testing.

The JMF for each mixture shall be in effect until modified in writing by the Engineer. Should a change in sources of materials be made, a new JMF must be approved by the Engineer before the new material is used.

<u>JMF Tolerances</u> - The job mix formula, operating within the allowable action limits for individual measurements as specified in Table 7 herein, shall be set within the design master limits specified for each mixture class, either Table 5 for Superpave design or Table 6 for Marshall design except that the Engineer may modify the design limits if they determine this to be necessary and in the best interest of the City of Worcester.

<u>Plant Trial Mixtures</u> - After receiving the job mix formula prepared by the Contractor, the Engineer will notify the Contractor regarding a verification of the optimum asphalt content and/or pre-production trials and Control Section for those mixtures so designated by the Engineer. A minimum of one trial mix shall be produced at the Contractor's proposed asphalt binder content and aggregate gradation.

<u>JMF Approval</u> - The Contractor will be notified by the Engineer if the JMF submittals are approved for production. The approved job mix formula for the mixture shall be in effect until modified in writing. As indicated in Section D, Plant Trial Mixtures, of this specification, the Engineer will notify the Contractor regarding the placement of a Control Section (See Section E). Following placement and testing of the Control Section, the JMF may have to be modified to meet both production and placement requirements of this specification. If warranted, the JMF resubmittal shall follow the applicable requirements of Section D of this specification. A JMF, once approved, will not be required for further mix approval for the construction season unless a change has occurred that warrants a new JMF approval or as directed by the Engineer. The approval of all JMFs will terminate on December 31st each year, regardless if the work is carried over to the following year. Control sections are required by the contractor for in-place mat thickness, uniformity, longitudinal joint characteristics, and density requirements before approval.

TABLE 2. PERCENT VOIDS IN MINERAL AGGREGATE (VMA)	
Nominal Maximum Aggregate Size	Percent Minimum
#4 (4.75mm)	16.0
3/8" (9.5 mm)	15.0
1/2" (12.5 mm)	14.0
3/4" (19.0 mm)	13.0
1.0" (25.0 mm)	12.0
1.5" (37.5 mm)	11.0

Traffic Levels	Design ESALs (80 kN)	Coarse Aggregate Angularity (5) ASTM D5821		Fine Aggregate Angularity (5) AASHTO T-304		Flat or Elongated Particles ASTM D-4791	Sand Equivalent AASHTO T-176
	(million)	(Depth from final surface) ≤ 100 mm	(Depth from final surface) > 100 mm	(Depth from final surface) ≤ 100 mm	(Depth from final surface) > 100 mm	> 9.5 mm	- - - - -
1	< 0.3	55/- -	- -/- -	- -	40	- - -	40
2	0.3 to < 3.0	75/- -	50/- -	40	40	10	40
3	3.0 to < 30.0	95/90(6)	80/75(6)	45	40	10	45
4	≥ 30.0	100/100	100/100	45	45	10	50
	Design ESALs are the anticipated project traffic level expected on the design lane, projected over a 20-year period, regardless of the actual expected design life of the roadway.	Criteria presented as minimum values. 95/90 denotes that a minimum of 95% of the coarse aggregate, by mass, shall have one fractured face and that a minimum of 90% shall have two fractured faces.		Criteria presented as minimum percent air voids in loosely compacted fine aggregate passing the 2.36 mm sieve.		Criteria presented as maximum Percent by mass of flat or elongated particles of materials retained on the 4.75 mm sieve, determined at 5:1 ratio. Not applicable for the 4.75mm Nominal Max Aggregate size mix	Criteria presented as minimum values for fine aggregate passing the 4.75 mm sieve.

TABLE 3: Consensus Properties of Combined Aggregate Structure for Superpave Mixtures.

Note 5: If less than 25 % of a given layer is within 100 mm of the anticipated top surface, the layer may be considered to be below 100 mm for mixture design purposes.

Note 6: For Superpave mixtures with design ESALs between **3.0 and 10.0 million**, the coarse aggregate angularity criteria shall be **85/80** for layers < 100 mm depth from final surface and a criteria of **60/- -** for layers >100 mm from final surface.

TABLE 4: Hot Mix Asphalt and Volumetric Properties for Superpave Mixtures.

Traffic Levels	Design ESALs (million)	Number of Gyrations by Superpave Gyratory Compactor			Percent Density of Gmm from HMA specimen			Voids Filled with Asphalt (VFA) Based on Nominal mix size					
		Nini	Ndes	Nmax	Nini	Ndes	Nmax	4.75 mm	9.5 mm	12.5 mm	19.0 mm	25.0 mm	37.5 mm
1	< 0.3	6	50	75	≤ 91.5	95 - 97	≤ 98.0	70 – 80	70 - 80	70 - 80	70 - 80	67 – 80	64 – 80
2	0.3 to < 3.0	7	75	115	≤ 90.5	95 - 97	≤ 98.0	65 – 78	65 - 78	65 - 78	65 - 78	65 - 78	64 - 78
3	3.0 to < 30	8	100	160	≤ 89.0	95 - 97	≤ 98.0	75 – 78	73 - 76	65 - 75	65 - 75	65 - 75	64 - 75
4	≥ 30.0	9	125	205	≤ 89.0	95 - 97	≤ 98.0	75 - 78	73 - 76	65 - 75	65 - 75	65 - 75	64 - 75

TABLE 5. SUPERPAVE HOT MIX ASPHALT MIXTURES												
	Percent by Weight Passing Sieves											
Sieve Size in. (mm)	**4.75mm**		**9.5mm**		**12.5mm**		**19.0mm**		**25.0mm**		**37.5mm**	
	Control Points		**Control Points**		**Control Points**		**Control Points**		**Control Points**		**Control Points**	
	Min %	**Max %**	**Min %**	**Max %**	**Min %**	**Max %**	**Min %**	**Max %**	**Min %**	**Max %**	**Min %**	**Max %**
2" (50.0)									-	-	100.0	
1-1/2" (37.5)	-	-	-	-	-	-	-	-	100	-	90.0	100.0
1" (25.4)	-	-	-	-	-	-	100.0	-	90.0	100.0	-	90.0
3/4" (19.0)	-	-	-	-	100.0	-	90.0	100.0	-	90.0	-	-
1/2" (12.5)	100.0	-	100.0	-	90.0	100.0	-	90.0	-	-	-	-
3/8" (9.5)	95.0	100.0	90.0	100.0	-	90.0	-	-	-	-	-	-
#4 (4.75)	90.0	100.0	-	90.0	-	-	-	-	-	-	-	-
#8 (2.36)	-	-	32.0	67.0	28.0	58.0	23.0	49.0	19.0	45.0	15.0	41.0
#16 (1.18)	30.0	60.0	-	-	-	-	-	-	-	-	-	-
#30 (0.600)	-	-	-	-	-	-	-	-	-	-	-	-
#50 (0.300)	-	-	-	-	-	-	-	-	-	-	-	-
#100 (0.150)	-	-	-	-	-	-	-	-	-	-	-	-
#200 (0.075)	6.0	12.0	2.0	10.0	2.0	10.0	2.0	8.0	1.0	7.0	0	6.0
Dust to Binder Ratio(Note):	0.9	2.0	0.6	1.2	0.6	1.2	0.6	1.2	0.6	1.2	0.6	1.2

Note: The Engineer may increase the Dust to binder ratio from 0.6-1.2 to 0.8-1.6 if the proposed aggregate gradation passes beneath the Primary Control Sieve (PCS) control point established in AASHTO M323.

Table 6. MARSHALL DESIGN MASTER RANGE TOLERANCES

Sieve Designation and % Binder Content	HMA Base Course	HMA Base/ Intermed. Course - Binder	HMA Intermed. Course Dense Binder	HMA Surface Course Dense Binder	HMA Surface Course Standard Top	HMA Surface Course Modified Top	HMA Dense Mix	HMA Surface Treatment	HMA OGFC
2 inches	100								
1 inch	57 – 87	100	100	100		100			
¾ inch		80 - 100	80 – 100	80 – 100		95 - 100			
5/8 inch					100				
½ inch	40 - 65	55 - 75	65 – 80	65 – 80	95 - 100	79 – 100	100		100
3/8 inch					80 - 100	68 – 88	80 - 100	100	90 – 100
No. 4	20 - 45	28 - 50	48 – 65	48 – 65	50 - 76	48 – 68	55 - 80	80 - 100	30 – 50
No. 8	15 - 33	20 - 38	37 – 49	37 – 49	37 - 49	33 – 46	48 - 59	64 - 85	5 – 15
No. 16					26 - 40	20 – 40	36 - 49	46 - 68	
No. 30	8 - 17	8 - 22	17 – 30	17 – 30	17 - 29	14 – 30	24 - 38	26 - 50	
No. 50	4 - 12	5 - 15	10 – 22	10 – 22	10 - 21	9 – 21	14 - 27	13 - 31	
No. 100					5 - 16	6 – 16	6 - 18	7 - 17	
No. 200	0 - 4	0 - 5	0 – 6	0 – 6	2 - 7	2 – 6	4 - 8	3 - 8	1 – 3
Binder	4 - 5	4.5 - 5.5	5 – 6	5.1 – 6	5.6 - 7.0	5.1 – 6	7 - 8	7 - 8	6 – 7
HMA Temp (F)	255-295	265-325	265-325	265-325	265-325	265-325	265-325	275-325	Per Design
HMA Temp (C)	124-146	129-163	129-163	129-163	129-163	129-163	129-163	135-163	Per Design
Marshall Blows	N/A	50	50	50	50	75	50	N/A	Per Design
Stability, lbs. Min		1000	1000	1000	1000	1500	1000		
Stability, Newtons		4500	4500	4500	4500	6750	6750		
Flow, 0.01″ (.25mm)		8-16	8-16	8-16	8-16	8-16	8-16		
Air Voids, %		3.0-6.0	3.0-6.0	3.0-6.0	3.0-6.0	3.0-5.0	3.0-6.0		

Table 6 Notes:

Dense mix including approved anti-stripping compound shall be furnished and used for protective (bottom) courses of pavement on bridges, and elsewhere shown on the plans.

The asphalt content of all mixtures shall be calculated on the percentage basis by weight of the total mix.

Additional HMA Criteria - In addition to the above HMA design requirements, the HMA mixtures shall also conform to the following:

1. Stripping

Each mixture shall be evaluated for stripping by performing indirect tensile tests on compacted mixtures. If the Tensile Strength Ratio (TSR) of the composite mixture, as determined by AASHTO T283 with freeze/thaw, is less than 80, the aggregates shall be rejected or the asphalt treated with an approved anti-stripping agent. The amount of anti-stripping agent added to the asphalt shall be sufficient to produce a TSR of not less than 80. If an antistrip agent is required, it will be provided by the Contractor at no additional cost.

2. Aggregate Composition:

The mineral aggregate shall be of such size that the percentage composition by weight, as determined by laboratory sieves, will conform to the gradation or gradations specified in either Table 5 or Table 6, whichever is applicable, when tested in accordance with AASHTO Standards T27 and T11. The gradations in either Table 5 or 6, whichever is applicable, represent the limits which shall determine the suitability of aggregate for use from the sources of supply. The aggregate, as selected (and used in the JMF) and blended, shall have a gradation within the limits designated in either Table 5 or 6, whichever is applicable, and shall not vary from the low limit on one sieve to the high limit on the adjacent sieve, or vice versa, but shall be well graded from coarse to fine.

3. JMF Deviations:

Deviations from the final approved mix design for asphalt binder content and gradation of aggregates shall be within the action limits for individual measurements as specified in Table 7. The limits still will apply if they fall outside the master grading band in Table 5 or 6, whichever is applicable.

4. Minimum Lift Thickness Consideration:

The maximum size aggregate used shall not be more than one-half of the compacted thickness of the course being constructed on a prepared surface or that which can be placed to achieve specification requirements. The maximum size is defined as one sieve size larger than the nominal maximum size. The nominal maximum size is defined as one sieve size larger that the first sieve to cumulatively retain more than 10 percent

5. HMA may be stored in surge or storage bins provided that the mixture used from the bins is of a uniform quality and meets the following requirements:

Temporary Storage of Bituminous Mixture - Use of surge bins or storage bias for temporary storage of hot mix asphalt will be permitted as follows:

a. The hot mix asphalt mixture may be stored in surge bins for a period of time not to exceed three hours.

b. The hot mix asphalt mixture may be stored in insulated and heated storage bins for a period of time not to exceed twelve hours, provided an inert gas atmosphere is maintained in the bin during the storage period.

c. If the Engineer determines that there is an excessive amount of heat loss, segregation and/or oxidation of the mixture due to temporary storage, use of surge bins or storage bins will be discontinued.

In addition, the recovered asphalt from the mix samples obtained 30 days after production shall meet the following requirements:

RECOVERED ASPHALT
ASTM D1856
ABSON METHOD

Test Property	Min.	Max.
Viscosity, poises @ 140F.	-	6000
Penetration, dmm @ 77F.	45	100
Ductility, cm @ 77F	75	-
T_{max} for G*/Sin (d) DSR (RTFO Aged)	-	One Grade Higher

Warm Mix Asphalt (WMA) - All SUPERPAVE Hot Mix Asphalt Mixtures may be modified using a WMA additive capable of lowering plant production temperatures to below 260° F. Warm Mix Asphalt additives reduce compaction effort and permit lower production temperatures than conventional hot mix asphalt. The WMA additive shall be a product listed on the Northeast Asphalt User Producer Group (NEAUPG) website - http://www.superpave.psu.edu/NEAUPG.html , except that no WMA foaming technology will be permitted which requires the mechanical injection of steam or water into the liquid asphalt.

The WMA additive must be compatible with polyphosphoric acid modified binders, polymer modified binders, and the HMA producer's HMA anti-stripping agents. The WMA additive shall be introduced in accordance with the Manufacturer's dosing rates and approved blending methods. The WMA additive Manufacturer shall have an on-site representative at the beginning of paving operations as directed by the engineer. The Manufacturer's representative shall be available for consultation during Warm Mix production.

All work done under this Item shall conform to the provisions of City of Worcester - Hot Mix Asphalt Roadway Pavement Specification. The WMA mixture design shall incorporate the requirements of AASHTO R35. All WMA additive equipment shall be fully automated and integrated into the plant controls.

When the asphalt binder is modified with the WMA additive at the HMA plant, all WMA additive equipment shall be fully automated and integrated into the plant controls and shall record actual dosage rates on the plant printouts.

The HMA QC Plan shall incorporate the modification of asphalt binders when the WMA additive is blended with the asphalt binder at the plant. This plan shall conform to the most current Northeast Asphalt User Producer Group (NEAUPG) binder testing requirements and specifically address WMA metering requirements, tolerances and other QC measures.

All costs associated with these provisions will be considered incidental. No additional compensation will be provided for the Manufacturer's representative, production of samples, the Warm Mix additive or other incidental costs.

E. *HMA CONTROL SECTION*

If required by the Engineer and prior to full production for the City, the Contractor shall place a quantity of hot mix asphalt according to the JMF and the project specifications. The amount of mixture should be sufficient, at a minimum, to construct a test section 300 feet long and 20 to 30 feet wide placed in two lanes, with a longitudinal joint, and shall be of the same depth specified for the construction of the course which it represents. The underlying grade or pavement structure upon which the Control Section is to be constructed shall be the same as the remainder of that project course represented by the Control Section. The equipment used in construction of the Control section shall be the same type and weight to be used on the remainder of the course represented by the Control Section. The control section may be as large as one production day on a City street as long as a longitudinal joint has been constructed.

Two Random sample(s) shall be taken at the plant by the Engineer and tested for air voids, aggregate gradation, and asphalt binder content in accordance with the Section H, "Plant-Produced Material".

Three randomly selected cores shall be taken from the finished pavement mat in the Control Section, and three from the longitudinal joint, and tested in accordance with Section H, "Field Placed HMA Material". Random sampling shall be in accordance with procedures contained in ASTM D3665.

Mat density and air voids shall be evaluated in accordance with Section H, “Field Placed HMA Material”. Joint density will be evaluated in accordance with Section H, “Field Placed HMA Material”.

The Control Section shall be considered acceptable if the uniformity, thickness, and 1) mat density, plant air voids, VMA, and VFA are within the requirements of this specification and 2) gradation and asphalt binder content are within the action limits specified herein for individual Measurements and 3) meet the minimum 100% payment criteria.

If the initial Control section should prove to be unacceptable, the necessary adjustments to the JMF, plant operation, placing procedures, and/or rolling procedures shall be made. A second Control section shall then be placed. Payment for the initial control section will not be rendered until an acceptable second control section is completed. Upon completion of an acceptable second control section, both it and the initial control section shall be paid for in accordance with Section J, “PAYMENT”. If the second test section also does not meet specification requirements, both sections shall be removed at the Contractor's expense. Additional Control sections, as required, shall be constructed and evaluated for conformance to the specifications. The Contractor will be responsible for all testing and oversight costs associated with all required control sections beyond the first and second. Any additional sections that are not acceptable shall be removed at the Contractor's expense. Full production shall not begin until an acceptable section has been constructed and accepted by the Engineer. Any control section that meets specification requirements shall be paid for in accordance with the Section J, “PAYMENT”.

Job mix formula quality control testing is to be performed by the Contractor at the start of plant production and in conjunction with the calibration of the plant for the JMF. It should be recognized that the aggregates produced by the plant might not satisfy the gradation requirements or produce a mix that exactly meets the JMF. In those instances, it will be necessary to re-evaluate and re-design the mix using plant-produced aggregates. Specimens should be prepared and the optimum asphalt binder content determined in the same manner as for the original design tests. A revised JMF will need to be submitted and a test section constructed prior to approval and full production. The test section and JMF submittal shall conform to all the specification requirements contained herein.

F. *EQUIPMENT*

Hot Mix Asphalt Mixing Plant - Shall meet MHD M3.11.07. Sufficient storage space shall be provided for each size of aggregate. The different aggregate sizes shall be kept separated until they have been delivered to the cold elevator feeding the drier. The storage yard shall be neat and orderly, and separated stockpiles shall be readily accessible for sampling.

1. Sampling Platform: A safe and adequate platform or catwalk with stairway and railing shall be provided to accommodate the inspector while checking temperatures and obtaining samples of the mixture from haul vehicles. The height of the platforms and raised platforms shall be adequate to accommodate safe acquisition of mix samples from the type of hauling unit(s) being utilized on the project.

2. Testing Laboratory - The Contractor or producer shall provide a testing laboratory at the production plant for quality control and quality acceptance functions during periods of mix production, sampling, and testing, and whenever materials subject to the provisions of these specifications are being supplied or tested. The laboratory shall contain adequate equipment, space, and utilities as required for the performance of the specified tests.

   It shall be available for joint use by the Contractor for quality control testing, if applicable, and by the Engineer for acceptance testing. The testing laboratory must have adequate equipment for the performance of the tests required by these specifications and the requirements of NETTCP. The Engineer shall have priority in use of the equipment necessary for acceptance testing. All the necessary testing equipment shall be located at the HMA plant supplying material to the project. In addition, all ancillary and miscellaneous equipment needed to perform the testing in accordance with these specifications shall be provided by the Contractor at no additional cost.

   The effective working area of the laboratory shall be a minimum of 150 square feet with a ceiling height of not less than 7.5 feet. Lighting shall be adequate to illuminate all working areas. It shall be equipped with heating and air conditioning units to maintain a temperature of 70°F ± 5°F.

   The plant laboratory shall further contain and be kept supplied with the following laboratory equipment:

   Scale (digital): 20,000gm capacity minimum, sensitivity 0.1gm.

Marshall Equipment: Automatic hot mix asphalt compactor mounted in accordance with ASTM D1559 and conforming to specifications for AASHTO T-245 which consists of totally enclosed, rigidly mounted operated frame, a standard circular-foot compaction hammer assembly designed to ensure an eighteen (18) inch drop regardless of specimen height, a one third (1/3) horsepower motor with belt guard and controls, an automatic counter that shuts off the power after the set number of hammer drops, and a standard compaction pedestal with guide pins for centering one standard (4 inch diameter) bituminous mold at a time. The Contractor shall also provide two (2) stability compaction molds conforming to ASTM D1559 and suitable for use with the automatic bituminous compactor.

NOTE: The Soil test Model AP-800 automatic bituminous compactor and AP-166 stability compaction molds have been found suitable.

Superpave Gyratory Compactor (For plants supplying materials contained in Table 5) conforming to the requirements of AASHTO R30, R35, M323, T312 and the Asphalt Institute Manual SP-2.

Bulk specific gravity determination equipment (AASHTO T166), and theoretical maximum specific gravity equipment (AASHTO T209).

Laboratory facilities shall be kept clean and all equipment shall be maintained in proper working condition. The Engineer shall be permitted unrestricted access to inspect the Contractor's laboratory facility and witness quality control activities, if applicable. The Engineer will advise the Contractor in writing of any noted deficiencies concerning the laboratory facility, equipment, supplies, or testing personnel and procedures. When the deficiencies are serious enough to be adversely affecting test results, the incorporation of the materials into the work shall be suspended immediately and will not be permitted to resume until the deficiencies are satisfactorily corrected.

Hauling Equipment - Trucks used for hauling hot mix asphalt mixtures shall have tight, clean smooth metal beds which have previously been cleaned of all foreign material. To prevent the mixture from adhering to them, the beds shall be lightly coated with a minimum amount of paraffin oil, lime solution, soluble oils or other approved material. When coating is applied, truck bodies shall be raised immediately prior to loading to remove any excess coating material in the truck bed. Containment of the excess anti-adhesive material may be required for environmental concerns depending on the type of anti-adhesive agent used. Each truck shall have a securely fastened, both front and rear, waterproof cover to protect the mixture at all times. The use of mesh type tarps will **not** be permitted. When necessary, so that the mixture will be delivered to the site at the specified temperature within 25ºF of the approved JMF, truck beds shall be insulated.

Pavers - Pavers shall be self-contained, heated, power-propelled units with an automated controlled screed, and shall be capable of spreading and finishing courses of hot mix asphalt material which will meet the specified thickness, smoothness, and grade. Pavers used for shoulders and similar construction shall be capable of spreading and finishing courses of hot mix asphalt material in widths shown on the plans.

The paver shall have a receiving hopper of sufficient capacity to permit a uniform spreading operation. The hopper shall be equipped with a distribution system to place the mixture uniformly in front of the screed. The hopper shall be maintained in excess of 25% volume of hot mix during normal paving operations thereby eliminating exposure of the drag slat conveyor. The screed assembly shall effectively produce a finished surface of the required evenness and texture without tearing, shoving, segregating or gouging the mixture.

The paver shall be capable of operating at forward speeds consistent with satisfactory laying of the mixture. The paver shall be maintained with non-worn reverse augers or kickback paddles at the center of the screed at the auger bearing box.

The paver shall be equipped with hoppers and distributing screws of the reversing type to place the mixture evenly in front of adjustable screeds. They shall be equipped with a quick and efficient steering device and shall have reverse as well as forward traveling speeds.

The paver shall employ mechanical devices such as equalizing runners, straight edge runners, evener arms or other compensating devices to adjust the grade and confine the edges of the mixture to true lines. To construct tight longitudinal paving joints, the end gate, or an edge plate, and the notched wedge joint maker, must be down just off the surface to ensure a light compaction and setup of the material on the joint. The paver shall be capable of spreading the mixture without segregation in layers to the depths and widths required. They shall be equipped with a single joint automated tracker device for proper matching of the elevation of longitudinal joints between adjacent strips or courses of the same thickness. Extensions shall contain auger and tunnel extensions if the end gate exceeds 18" from the end of the auger shaft.

An approved device will be required for heating the screed to the temperature required for the laying of the mixtures without pulling or marring.

The term "screed" includes any device operated by cutting, crowding, or other practicable action, which is effective on the mixtures at permissible workable temperatures without tearing, shoving, or gouging and which produces a finished surface of the evenness and texture required.

The pavers employed on Worcester projects shall operate by the use of a sensing grid for operation to a stringline and an automated joint matcher for joints, and an automatic grade control device for profile. The paver shall be equipped with a control system capable of automatically maintaining the specified screed elevation. The control system shall be automatically actuated from either a reference line and/or through a system of mechanical sensors or sensor-directed mechanisms or devices which will maintain the paver screed at a predetermined transverse slope and at the proper elevation to obtain the required surface. The transverse slope controller shall be capable of maintaining the screed at the desired slope within plus or minus 0.1 percent.

The controls shall be capable of working in conjunction with any of the following attachments:

1. Ski-type device of not less than 30 feet (9.14 m) in length.
2. Taut stringline (wire) set to grade.
3. Short ski or shoe.
4. Laser control.
5. Sonic control.

The paver screed may be equipped with a Longitudinal Notched - Wedge Joint paver attachment or Straight Wedge Joint paver attachment and screed mounted roller attachment. When placing HMA pavement courses at a thickness of 1.5" or greater, the notched wedge is recommended; when placing HMA pavement courses less than 1.5", the straight wedge is recommended. The notched wedge joint includes a variable notched vertical edge (the notch vertical height to be equal to the mixture's maximum aggregate size). The sloped surface of the diagonal wedge joint shall not exceed a 6:1 slope.

Rollers - Rollers of the vibratory, steel wheel, oscillatory, and pneumatic-tired type may be used. They shall be in good condition, capable of reversing direction without backlash, and operating at slow speeds to avoid displacement of the hot mix asphalt. Static rollers shall be operated at speeds not to exceed 3 mph and vibratory rollers shall be operated at a minimum of 10 to 12 impacts/ft. in vibratory mode. The number, type, and weight of rollers shall be sufficient to compact the mixture to the required density while it is still in a workable condition.

The use of equipment which causes excessive crushing of the aggregate or that which does not produce a smooth, dense and uniform HMA mat will not be permitted.

The Contractor shall exercise great caution when using vibratory rollers so as not to cause damage to buried infrastructure or adjacent infrastructure. Damage to buried or adjacent infrastructure will be the responsibility of the Contractor. The new Oscillation type rollers are acceptable for use for intermediate compaction and back rolling of HMA in the City of Worcester.

The Contractor is encouraged, when applicable, to use a pneumatic square edge-tired compaction roller (either one or both axles) as another acceptable alternate for the Intermediate and Final rolling of hot mix in the City of Worcester.

G. *HMA CONSTRUCTION*

Weather Limitations - The HMA/WMA shall not be placed when weather conditions of fog or rain prevail or when the pavement surface or base shows signs of free moisture (film of water). When the surface temperature of the underlying course is less than 50°F but above 40ºF, the Contractor shall determine the time available for compaction. No material will be placed by the Contractor when the surface temperature is below 40ºF, unless approved by the Engineer. The time available for compaction shall be calculated based on the time, date, air temperature, average wind speed, sky conditions, latitude, mix type, PG grade, lift thickness, mix delivery temperature, existing surface type, existing moisture content of surface, existing state of moisture in surface, and surface temperature. The estimated time available for compaction can be calculated with computer programs, e.g., Pave Cool Tool 2.4.

This program is available at the following web location:

http://mnroad.dot.state.mn.us/research/mnroad_project/restools/cool tool.asp

The information regarding the air temperature, average wind speed, sky conditions, mix delivery temperature, and existing moisture conditions shall be evaluated by the Engineer and a Contractor's representative located at the paving operation. The estimated time available for compaction shall be provided by the Contractor to the Engineer. The Engineer and the Contractor shall determine if there is an adequate amount of time available to compact the mixture. Options can be explored to extend the time available for compaction. If there is an adequate amount of time available to compact the mixture, the temperature requirements may be waived by the Engineer; however all other requirements including compaction shall be met. The Contractor assumes responsibility for constructing the pavement to meet compaction, bonding to the underlying surface and specification requirements.

The Engineer will not permit work to continue when overtaken by sudden storms until the pavement surface shows no signs of free moisture. The material in transit at the time of shutdown will not be placed until the pavement surface shows no signs of free moisture, provided the mixture is within temperature limits as specified.

The construction of HMA/WMA concrete pavements shall terminate on November 15 and shall not be resumed prior to April 1 except as determined and directed in writing by the Engineer.

Thermometer - The Contractor will supply an approved dial type thermometer with a temperature range of 50ºF to 500ºF and an infrared pistol thermometer for use during HMA placement. The infrared pistol thermometer shall be Fahrenheit or Celsius selectable and conform to the following requirements:

Portable and battery operated	Accuracy of +/- 2%
Repeatability of +/- 3ºC	Emissivity preset at 0.95
LCD Display to nearest 1º	Temp. Operating range of -4ºF to 752ºF

The thermometers will remain the property of the Contractor upon completion of the project.

Pre-Paving Conference - Prior to the placing of any HMA, a pre-paving conference (approximately 5 hours in length) shall be held to discuss and approve the paving schedule, source of HMA, job mix formula approvals, type and amount of equipment to be used, sequence of paving pattern, rate of HMA supply, all sampling, testing and reporting procedures to be used, traffic control, safety, and general continuity of the operation. Engineer's representatives, Contractor's plant, quality control and field representatives and Engineer's testing and inspection agents (any and ALL personnel anticipated to be on job site) shall attend this meeting. All equipment used shall be approved on the project site prior to starting up each day. **It will be mandatory for the Contractor and the paving subcontractor, if utilized, to attend this conference.** The Contractor will be responsible for all costs associated with additional training.

The Engineer, upon 48 hours' notice, may be able to hold this conference preferably on the forecast of an inclement day.

Preparation of the Underlying Surface - Immediately before placing the hot mix asphalt, the underlying course shall be thoroughly cleaned of all dust and debris by a self-propelled sweeper. Areas inaccessible by power sweepers shall be broom swept until the pavement surface is clean. Extra care shall be required during fall leaf fall.

Proof roll prepared base material surface, if applicable, to identify areas requiring removal and re-compaction, and to provide a uniform degree of compaction over the entire pavement area.

Do not begin paving work until deficient base material areas and utility trenches have been corrected and are ready to receive paving. Paving shall not be applied until the Engineer inspects and approves the finished base.

When an existing surface or new base upon which the lower course is to be placed contains unsatisfactory irregularities, in the Engineer's judgment, such irregularities may be eliminated by an adequate placing and compaction of HMA mixture so as to furnish a surface with true contour and grade before placing any specified course of mixture.

Check all frames, covers, grates, water valve boxes and other miscellaneous castings that are located in the proposed pavement areas to ensure that all have been correctly positioned and set to the proper slope and elevation. All covers and grates shall be set flush with the required finished surface. No depressions or mounds will be permitted in the pavement to accommodate inaccuracies in the setting of castings.

For Reclaimed base, reconstruction or where new base is graded, the Contractor shall furnish, set, and maintain all line and grade stakes necessary to guide the automated grade control equipment. Where required these control stakes shall be maintained by the Contractor and used throughout the operations, from the grading of the subbase material up to and including the final layers of the pavement.

Adequate artificial lighting shall be provided during night placements. Hauling over freshly placed material shall not be permitted until the material has been compacted, as specified, and allowed to cool to an internal temperature of 140°F minimum.

Proper precautions shall be taken to prevent damage by construction operations to edges adjacent to the hot mix asphalt. These edges may be, but are not limited to, gutters, catch basins, curbs, concrete structures, and hot mix asphalt concrete. If damage occurs, repairs shall be made to the satisfaction of the Engineer with no additional payment.

Tack Coat - Contact surfaces of manholes, structures, vertical pavement edges, etc. shall be painted with a thin, uniform tack coat just before the material is placed against them.

Tack coat is required on all surfaces to be paved; this includes leveling, base or intermediate layers of HMA, unless the underlying HMA layer was placed during the same day. Particular attention should be made during the application that the longitudinal joint areas be treated with no bare spots. Missing areas adjacent to the longitudinal joint area will require either re-application or localized hand work application as directed by the Engineer.

Tack coat shall be applied at a residual binder amount on the pavement between 0.03 to 0.05 gallons per square yard. Use the lower application amount between new lifts and the higher application rate on milled or Portland cement surfaces. This amounts to a very thin application that needs to be carefully applied. Massachusetts uses RS-1 and CRS-1 type asphalt emulsions for tack coating. These can be applied, as an emulsion, between 0.05 to 0.08 gallons per square yard. Tack coat shall be supplied as part of the HMA operation.

Allow tack coat to dry from a brown color to a black color prior to paving.

HMA Production - The aggregates and the asphalt binder material shall be weighed or metered and introduced into the mixer in the amount specified by the JMF and within the allowable action limits as stated in Table 7 HMA PRODUCTION LIMITS. These limits shall be applied to the target values established in the JMF. Corrective action shall be taken by the Contractor when the calculated individual result for gradation or asphalt content falls outside the target JMF value beyond the action limit listed in Table 7. The Contractor shall take the appropriate action when results indicate the material is out of tolerance. The Contractor shall be required to suspend production when the calculated individual result for gradation or asphalt content falls outside the target JMF value beyond the suspension limit listed in Table 7, or when the asphalt binder content is below the minimum values stated in Table 6 for Marshall Mixes. The Contractor shall be required to suspend production if two points in a row fall outside the Action Limits for individual measurements or if three nonconsecutive samples fall outside the Action limits. The Contractor shall be required to suspend production if one point falls outside the Suspension Limits for individual measurements. The Contractor shall also be required to suspend production if one point falls outside the Suspension Limits for range, Table 8.

1. Plant Trials – If production is suspended, the production facility shall be required to produce material on a trial basis for testing purposes without shipment to the project. No payment will be made for material and labor employed for nonconforming plant trials. The Engineer or his representative shall pay for acceptance sampling and testing for the first set of trials necessary to determine conformance with the specification requirements. If the first set of trials does not conform to specification requirements, the Contractor shall pay for any additional trial sampling and testing for acceptance. When trials have been approved, the plant will return to its normal operation.

Failure to stop production and make adjustments when required due to an individual test(s) not meeting the specified requirements may subject all of the mix from the stop point to be considered unacceptable.

The temperature of the mixture shall be in accordance with the Performance Graded Asphalt Binder (PGAB) allowable mixing and compaction temperature range. The temperature of the mixture when discharged from the mixer or silo shall be ± 20°F (-6°C) from the value stated in the job mix formula. Mixtures exceeding these limits shall be subject to rejection.

RAP VERIFICATION - The City will randomly test HMA mixtures from the production plant or storage silos to determine the quality of the PG binder. For non-modified binder mixtures, the absolute viscosity of the recovered

asphalt shall be no greater than 6,000 poises at 140ºF. If the absolute viscosity is greater than 6,000 poises, then a full PG binder test verification will be run for conformance to the PG grade specified. For modified asphalt binder mixtures, a full PG binder test verification will be run for conformance to the PG grade specified. Failure of the PGAB to conform to specification requirements may be cause for rejection of the Lot. Further PGAB tests may be conducted on previous Lots; all costs for the PGAB tests will be the responsibility of the Producer if the results do not meet specifications [T_{MAX} for G*/Sin (d) DSR (RTFO Aged] for PG 64-28 or 64-22 (whichever is applicable) recently placed.

Transporting, Placing and Finishing - HMA deliveries shall be scheduled so that placing and compacting of mixture is uniform with minimum stopping and starting of the paver.

Upon arrival, the mixture shall be placed to the full width by a hot mix asphalt paver. It shall be struck off in a uniform layer of such depth that, when the work is completed, it shall have the required thickness and conform to the grade and contour indicated. The speed of the paver shall be regulated to eliminate pulling and tearing of the hot mix asphalt mat. Unless otherwise permitted, placement of the mixture shall begin along the centerline of a crowned section or on the high side of areas with a one-way slope. The mixture shall be placed in consecutive adjacent strips having a minimum width of 10 feet except where edge lanes require less width to complete the area. The longitudinal joint in one course shall offset the longitudinal joint in the course immediately below by at least one (1) foot, however, the joint in the top layer shall be at the centerline of the pavement. Transverse joints in one layer shall be offset by at least two feet from transverse joints in the previous layer. The placement of the material along the longitudinal joint may be performed by setting the screed to overlap the first mat. The elevation of the screed above the surface of the first mat should be equal to the amount of roll-down expected during compaction of the new mat. The overlapped material shall be bumped by the lutes, if necessary, to optimize the density along the longitudinal joint. Under no circumstances should the overlapped material be broadcast across the mat. Excess material should be removed by hand. Transverse joints in adjacent lanes shall be offset a minimum of 10 feet.

On areas where irregularities or unavoidable obstacles make the use of mechanical spreading and finishing equipment impractical, the mixture may be spread and luted by hand tools. When hand spreading is permitted, the mixture shall be distributed into place by means of hot shovels and spread with lutes in a loose layer of uniform density and correct depth. The use of rakes to spread the hot mix asphalt shall not be permitted. Loads shall not be dumped any faster than they can be properly handled by the shovelers and the shovelers shall not distribute the dumped load any faster than it can properly be handled by the luters. The luting shall be carefully and skillfully done to avoid segregation and so that, after the first passage of the roller over the luted mixture, no back patching will be necessary. Compaction must immediately follow hand spreading such that specification density is achieved while the mixture temperature is above the manufacturers recommended compaction temperature for the performance graded binder.

The mixtures shall be placed and compacted only at such times as to permit the proper inspection and checking by the Engineer.

The mixtures shall only be placed in the work when they can be efficiently and satisfactorily placed, compacted, smoothed, and made uniform in accordance with these specifications. Unless otherwise permitted by the Engineer for special particular conditions, only machine methods of placing shall be used.

No mixture shall be placed unless the breakdown and intermediate rolling can be completed by the time the material has cooled to 150ºF, or that minimum compaction temperature specified by the binder manufacturer and provided that the density and uniformity of the completed pavement attains specification compliance.

No traffic of any kind shall be permitted on the HMA intermediate or HMA base when dirt or any other foreign substance may be tracked thereon.

Immediately after any course is screeded and before roller compaction is started, the surface shall be checked, any irregularities adjusted, any accumulation from the screed removed by rake or lute, and all fat spots in any course removed and replaced with satisfactory materials. Irregularities in alignment and grade along outside edges shall be corrected by the addition or removal of mixture before the edges are rolled. Indiscriminate casting of mix on the new screeded surface, where irregularities are not evident, shall not be permitted.

All hot mix shall be placed and compacted in such a manner as to ensure a continuous bond between the tacked hot mix pavement surfaces and obtain the required density.

1. Production Trial – If it is determined, during the performance of the contract, that the pavement does not conform to the surface tolerance, density and uniformity requirements, the Engineer may order the Contractor to cease all operations and construct an additional HMA CONTROL SECTION consisting

of a sufficient quantity of surface course mixture. The Contractor shall construct a control section as directed by the Engineer either: a minimum of 100 feet long by 12 feet wide, or a minimum of 50 feet long by a minimum of 24 feet wide depending upon the problem. A control section may be required each time a change is made in the Job Mix Formula, sources of supply or paving and rolling equipment.

The mixture shall be prepared, placed, and compacted in accordance with this specification. When the control section pavement has cooled sufficiently, a total of six (6) core samples of the finished pavement shall be taken and tested in accordance with the requirements of Section E.

If the tests by the Engineer indicate that pavement does not conform to specification requirements, necessary adjustment to plant operation and placement/rolling procedures shall be made.

Where the average density of the core samples does not conform to specification requirements, the pavement shall be removed at no cost to the Engineer. No payment will be made for material and labor employed, either in placement or removal of the nonconforming control section.

The control section may be removed at the direction and at no cost to the Engineer if the test result of any one mat core density falls below 90% of theoretical maximum laboratory density and/or any one longitudinal joint density falls below 88% of theoretical maximum laboratory density.

The Contractor shall not be permitted to place surface course pavement until a control section is approved by the Engineer.

Joints **-** The formation of all joints shall be made in such a manner as to ensure a continuous bond between the courses and obtain the required density. All joints shall have the same texture as other sections of the course and meet the requirements for smoothness and grade. When abutting a previously placed lane, the longitudinal joint should be rolled first followed by the regular rolling procedure.

1. Transverse Joints - The roller shall not pass over the unprotected end of the freshly laid mixture except when necessary to form a transverse joint. When necessary to form a transverse joint, it shall be made by means of placing a bulkhead or by temporarily tapering the course, in which case the edge shall be cut back to its full depth and width on a straight line to expose a vertical face. In both methods, all contact surfaces shall be given a coat of hot-pour rubberized asphalt sealer before placing any fresh mixture against the joint.

2. Longitudinal Joints - All longitudinal joints shall be constructed with the first paver pass in a neat straight line. Deviation from trueness will negate the ability to form a properly compacted longitudinal joint.

   The paver screed may be equipped with a Longitudinal Notched - Wedge Joint or Straight Wedge Joint paver attachment and screed mounted roller attachment when placing HMA pavement courses. Use the Notched Wedge Joint for thicknesses of 1.5" or greater and use the Straight Wedge Joint for thicknesses less than 1.5". The notched wedge joint shall include a variable notched vertical edge (the notch vertical height to be equal to the mixture's maximum aggregate size). The sloped surface of the diagonal wedge joint shall not exceed a 6:1 slope. Prior to placing the adjacent paver pass for sloped joints, all joint contact surfaces shall be given a tack coat prior to placing any fresh mixture against the joint.

   Vertical butt joints which are not constructed straight, or are not constructed with an edge restraining device (either a commercial paver screed attachment or by dropping the end gate down to the surface), or are damaged or otherwise defective shall be cut back 3 inches to expose a clean, sound surface for the full depth of the course. All contact surfaces shall be given a coat of hot-pour rubberized asphalt sealer prior to placing any fresh mixture against the joint.

3. Longitudinal and transverse joints shall have an in-place density when measured by the average of three, six (6") inch cores between 90.0% to 98.0% of maximum theoretical.

Compaction of HMA Mixture After Placing - The mixture shall be thoroughly and uniformly compacted by rolling. The surface shall be compacted as soon as possible when the mixture has attained sufficient stability so that the rolling does not cause undue displacement, cracking or shoving. The sequence of rolling operations and the type of rollers used shall be at the discretion of the Contractor. Rolling shall be initiated with the drive roll or wheel towards the paving machine. When rolling on steep grades, the previous procedure may need to be altered.

The speed of the roller shall, at all times, be sufficiently slow and of uniform speed to avoid displacement of the hot mixture and be effective in compaction. Any displacement occurring as a result of reversing the direction of the roller, or from any other cause, shall be corrected at once.

Sufficient rollers shall be furnished to handle the output of the plant. Rolling shall continue until the surface is of uniform texture, true to grade and cross section, and the required field density is obtained. The number of rollers and passes required shall be governed by the compaction results; however, at least two rollers shall be provided for each paver employed on the paving operation. The City of Worcester is encouraging the use of pneumatic or oscillation rollers. If one of the selected rollers is pneumatic, it shall be equipped with the European square edge tires. This will allow the pneumatic roller to handle both the intermediate compaction as well as the back rolling responsibilities on two-roller trains. An alternate to a full pneumatic European tired roller would be a combination 10-ton steel vibratory with large pneumatic square edge rear wheels. An acceptable alternative to the vibratory or pneumatic tired rollers would be the “Hamm” Oscillatory roller. Each roller shall be operated by a competent, experienced roller operator and shall be kept in as nearly continuous operation as practicable while work is underway. A plate shall be attached to each roller showing the ballasted and un-ballasted weight per length-width of tread.

To prevent adhesion of the mixture to the steel roller, the drums or shall be kept properly moistened, cocoa mats kept clean and scrapers used, but excessive water will not be permitted. Pneumatic rollers shall be operated on adjacent pavement surfaces to get the tires warm to hot from friction, then moved to the fresh mat.

In areas not accessible to the roller, the mixture shall be thoroughly compacted with hand tampers and vibratory plate compactors.

Any mixture that becomes loose and broken, mixed with dirt, contains check-cracking, or in any way defective shall be removed and replaced with fresh hot mixture and immediately compacted to conform to the surrounding area. This work shall be done at the Contractor’s expense. Skin patching shall not be allowed.

Along any adjoining edge such as curb, gutter or an adjoining pavement, and after the HMA is placed by the paver, just enough of the hot HMA shall be placed by hand method to fill any space left open. These joints shall be properly ‘set up’ with the back of a lute at the proper height and level to receive the maximum compaction. Any areas where the rollers cannot access shall be hand tamped or plate compacted.

1. Shaping Edges - While the surface is being compacted and finished, the Contractor shall carefully trim the outside edges of the pavement to the proper alignment. Edges so formed shall be beveled while still hot with the back of a lute or smoothing iron and thoroughly compacted by tampers or by other satisfactory methods.

Surface Smoothness - The finished surfaces of the pavement shall be uniform in appearance, free from irregularities in contour and texture and shall present a smooth-riding surface. Smoothness evaluation applies to all hot mix asphalt concrete roadways receiving 1.5" or more in plan (compacted) thickness of HMA pavement.

Tests for conformity with the specified crown and grade shall be made by the Contractor immediately after initial compaction. Any variation shall be corrected by the removal or addition of materials and by continuous rolling.

The finished surface of the pavement, when measured with a 10-foot straightedge, shall not vary more than 1/4 inch for the surface course and 3/8 inch for the intermediate course measured perpendicular and parallel to the centerline. If, in the opinion of the Engineer, the surface visually appears wavy, but meets the surface tolerance test with the 10-foot straightedge, the Engineer reserves the right to additionally test with the use of Inertial Profile Equipment which records cumulative vertical deviations per unit length using a statistic called International Roughness Index (IRI). City of Worcester street upset limit for IRI is set at 135 in/mile using similar equipment that MHD specifies in their Quality Assurance HMA projects.

After the completion of final rolling, the smoothness of the course shall again be tested; humps or depressions exceeding the specified tolerances shall be immediately corrected by removing the defective work and replacing with new material, as directed by the Engineer. This shall be done at the Contractor's expense.

Skin patching will not be permitted.

When profile corrections are required, the Contractor shall use one or more of the following corrective methods:

Removing and replacing the entire pavement thickness;

Diamond grinding or micro milling;

Overlaying (not patching) with the specified surface course;

Removing the surface by milling and applying a lift(s) of the specified course(s);

Use of other methods that will provide the desired results;

The corrective method(s) chosen by the Contractor shall be performed at the Contractor's expense, including all necessary equipment and traffic control. Areas of removal and replacement shall be removed the full width of the lane. The removal areas shall begin and end with a transverse butt joint which shall be constructed with a transverse saw cut perpendicular to the centerline. Replacement materials shall be placed in sufficient quantity so the finished surface will conform to grade and smoothness requirements. The corrective area shall conform to all material and density specification requirements. When the corrective work consists of an overlay, the overlay shall cover the full width of the pavement including shoulders. The area overlaid shall begin and end with a transverse butt joint which shall be constructed with a transverse saw cut and asphalt removal. All materials shall meet contract requirements. The overlay shall be placed so the finished surface will conform to grade and smoothness requirements. The overlayed area shall be compacted to the specified density.

The Engineer shall retest any sections where corrections were made to verify that the corrections produced a surface that conforms to the grade and smoothness requirements.

Uniformity - The HMA mat shall be smooth, dense, and uniform. Uniformity is generally affected by Thermal and/or Aggregate segregation.

If segregation is evident and discernable by either the Contractor or the Engineer, the Contractor shall immediately cease production and take steps to correct and eliminate the cause(s) of the segregation to the satisfaction of the Engineer.

The Contractor shall review all potential causes of segregation as it relates to its operation, including but not limited to HMA Plant issues, loading and transportation issues, placement issues, thermal segregation, and hand work. The Contractor shall employ additional investigation methods and make the necessary changes in their operation such that segregation is eliminated and mat uniformity is acceptable.

The Engineer shall obtain two (2) six inch diameter cores from the identified (segregated) area and two (2) six inch diameter cores from the non-segregated area. The cores may be evaluated for resilient modulus, dry tensile strength, change in air voids, maximum in place air voids, aggregate gradation and binder content. The results of the data obtained on the cores from the segregated area will be compared to the results of tests performed on the cores from the non-segregated area.

If any mix property is beyond the tolerance limits stated in the table below, that area shall be considered segregated and shall be repaired by the contractor.

SEGREGATION LIMITS

Change in Mix Properties Expressed as a Percentage of the Properties in the Non-Segregated Areas	
Property	**Limits**
Resilient Modulus, psi @ 77°F	<80%
Dry Tensile Strength, psi @ 77°F	<90%
Aggregate Gradation and Binder Content	Refer to Table 7 (Action Limits)
Change in Air Voids	>2.5%

The samples for the segregation analysis will be considered separately from the mat and joint cores tested for acceptance.

Segregated areas not meeting the requirements stated above or areas having more than 13% air voids shall be removed and replaced for the entire pavement thickness and lane width, or as directed by the Engineer. All corrective methods shall be performed at the Contractor's expense. The removal areas shall begin and end with a transverse butt joint which shall be constructed with a transverse saw cut perpendicular to the centerline. The corrective area shall conform to all grades, smoothness, material, and density specification requirements. The Engineer may retest any areas where corrections were made to verify that the material meets specification requirements.

Thickness - The thickness requirements contained herein shall apply only when each pavement layer is specified to be a uniform compacted thickness of 1 inch or greater. Thickness shall be evaluated for acceptance by the Engineer to the requirements shown on the plans. Measurements of thickness may be checked periodically by the Contractor in following their QC system for field operations. Measurements of thickness for

acceptance shall be made by the Engineer using four-inch minimum diameter pavement cores removed also for subsequent density measurement.

The finished surfaces of each HMA pavement course shall not vary from that specified or cross sections shown on the contract drawings by more than one-quarter (1/4) of an inch. The Contractor shall correct pavement areas varying in excess of this amount by removing and replacing the defective work or as ordered by the Engineer. Skin patching will not be permitted.

Grade - The finished surface of the pavement shall not vary from the gradeline elevations as shown on the plans by more than 1/2 inch. The Contractor shall remove deficient areas and replace with new material. Sufficient material shall be removed to allow at least 1.5 inches of hot mix asphalt to be placed. Skin patching for correcting low areas shall not be permitted. High points may be ground off.

Leveling Course - Any HMA used for truing and leveling shall meet the requirements of the mix design methods and the requirements of the TABLE 6 or TABLE 3, 4, and 5 specifications for the applicable mixtures. Leveling courses shall not be subject to density requirements. The thickness of the Leveling Course shall be measured off the interface with the existing milled or un-milled pavement surface. The leveling course shall be compacted with the same effort used to achieve placement and density of the test section. The truing and leveling course shall not exceed a nominal thickness of 1.5 inches.

Opening to Traffic - No vehicular traffic or loads shall be permitted on the newly completed pavement until adequate stability has been attained and the material has cooled sufficiently to an internal temperature of 140ºF or less. If the climatic or other conditions warrant, or if the PGAB manufacturer recommends, the period of time before opening to traffic may be extended at the discretion of the Engineer.

Contractor Quality Control of HMA Pavement

1. General - Although guidelines are established and certain requirements are shown, they are suggested at this time. The QC system addresses all elements which effect the quality of the pavement including, but not limited to:

   a. Mix Design

   b. Aggregate Grading

   c. Quality of Materials

   d. Stockpile Management

   e. Proportioning

   f. Mixing and Transportation

   g. Placing and Finishing

   h. Joints

   i. Compaction

   j. Surface smoothness and uniformity

   k. Thickness and grade

   The Contractor shall be prepared to discuss and present, at the pre-paving conference, their understanding of quality control for this contract.

2. Control Charts

   Contractor shall develop production control charts and post for visual reference in the testing laboratory. The control charts should identify the project number, the contract item number, the test number, each test parameter, the Action and Suspension Limits applicable to each test parameter, and the production test results. If the project data during production indicates a problem and the Contractor is not taking satisfactory corrective action, then the Engineer may suspend production or acceptance of the material, in accordance with these specifications.

   Individual Measurements: Control charts for individual measurements may be established to indicate production quality control within given tolerances for aggregate gradation and asphalt binder content. The control charts will use the JMF target values as the indicator of central tendency for the following test parameters with associated Action and Suspension Limits:

TABLE 7 HMA PRODUCTION LIMITS FOR INDIVIDUAL MEASUREMENTS

Sieve Size	Action	Suspension
1-1/2" (37.5mm)	0%	0%
1" (25.0 mm)	±6%	±9%
3/4" (19.0 mm)	±6%	±9%
1/2" (12.5 mm)	±6%	±9%
3/8" (9.5 mm)	±6%	±9%
#4 (4.75 mm)	±6%	±9%
#8 (2.36 mm)	±5%	±7.5%
#16 (1.18 mm)	±5%	±7.5%
#30 (0.600 mm)	±4%	±5.5%
#50 (0.300 mm)	±3%	±4.5%
#100 (0.150 mm)	±3%	±4.5%
#200 (0.075 mm)	±2%	±3%
Asphalt Binder Content	±0.4%	±0.70%
Design Air Voids (4.0%)	±1%	±1.7%
Voids in Minerial Aggregate	0.4% below mix specified min.	0.7% below mix specified min.
Voids Filled with Asphalt	±1% below or above mix specified range	±2% below or above mix specified range

When evaluating the production limits, the sieve sizes above the maximum size aggregate should be deleted from the Individual Measurements Chart and the maximum aggregate sieve size Action and Suspension Limits should be changed to 0%.

Range. Control charts for range may be established to indicate production variability for the test parameters and Suspension Limits listed below. The range may be computed as the difference between the high and low test results per lot for each control parameter. The Suspension Limits specified below are based on a sample size of n = 2. If more than two tests per lot were used, the Suspension Limits shall be adjusted by multiplying the Suspension Limit by 1.18 for n = 3 and by 1.27 for n = 4.

Table 8 CONTROL CHART LIMITS BASED ON RANGE	
(Based on n = 2)	
Sieve	**Suspension Limit**
1-1/2" (37.5 mm)	11 percent
1" (25.0 mm)	11 percent
3/4" (19.0 mm)	11 percent
1/2" (12.5 mm)	11 percent
3/8" (9.5 mm)	11 percent
#4 (4.75 mm)	11 percent
#8 (2.36 mm)	10 percent
#16 (1.18 mm)	9 percent
#50 (0.30 mm)	6 percent
#200 (0.075 mm)	3.5 percent
Asphalt Binder Content	0.8 percent
Design Air Void Content	2.0 percent

Corrective Action. The Contractor should review the control charts on a continuous basis making adjustments to the process when necessary to keep the product consistent. As a minimum, a process shall be deemed out of control and production stopped and corrective action taken, if:

Design Air Void Content or Asphalt Binder Content falls outside the Suspension Limit line for individual measurements or range; or

Design Air Voids and two or more points fall outside the Action Limit line for individual measurements as indicated in Table 7; or

Design Air Voids fall outside the Action Limit and one point falls outside the Suspension Limit for individual measurements as indicated in Table 7; or

Three points in a row fall outside the Action Limit line for individual measurements as indicated in Table 7.

Three nonconsecutive samples out of 5 samples fall outside the Action Limit line for individual measurements as indicated in Table 7.

Two consecutive streets or two consecutive 1,000 ton lots of material tested for mat density or longitudinal joint density falls below the threshold density for 100% adjustment, as noted in Table 9 and Table 10.

The Contractor's Quality Control system shall include an appropriate action to be taken when the process is believed to be out of tolerance. The Contractor should review the control charts on a continuous basis making adjustments to the process when necessary to keep the product consistent.

Acceptance testing requirements are the responsibility of the Engineer.

H. ***QUALITY ACCEPTANCE OF HMA***

All acceptance sampling and testing necessary to determine conformance with the requirements specified in this section will be performed by the Engineer at no cost to the contractor, unless otherwise stated herein. Testing organizations performing these tests shall meet the requirements of ASTM D 3666. All equipment in Contractor furnished laboratories shall be calibrated and verified by a testing organization prior to the start of operations. Such verification/certification shall be furnished to the Engineer prior to production. Engineer's testing personnel shall be certified by the New England Transportation Technician Certification Program

(NETTCP). This function does not relieve the Contractor from performing their daily quality control tasks as part of their normal operating business.

The Engineer or their agent shall have access at any time to all parts of the producing plant for:

a. Inspection of the condition and operations of the yard, plant and laboratory.

b. Confirmation of the adequacy of equipment in use.

c. Verification of the character and proportions of the mixture.

d. Determination of temperatures being maintained in the preparation of the mixtures.

e. Inspection of incidental related procedures.

Samples of all material including compacted specimens and certified copies of all reports and printouts shall be made available to the Engineer or its agent as often as requested including: asphalt binder; virgin aggregates; modifiers, loose and compacted mixture specimens; and combined aggregate samples.

1. PLANT-PRODUCED MATERIAL

Plant-produced material shall be sampled and tested for VMA, VFA, gradation, asphalt binder content, and air voids (Marshall or Superpave at N_{design}), on a lot basis. The Engineer's testing personnel shall be certified by the New England Transportation Technician Certification Program (NETTCP), as HMA Plant Technicians. Sampling shall be from material deposited into trucks at the plant or from trucks at the job site. A lot will consist of:

- one day's production and shall be divided into 300 ton sublots. A minimum of one sample shall be obtained for each lot.

Where more than one plant is simultaneously producing material for, the job, the lot sizes shall apply separately for each plant.

Sampling - Sufficient material for analysis and preparation of test specimens will be sampled by the Engineer on a random basis, in accordance with the procedures contained in ASTM D 3665. A minimum of one set of laboratory compacted specimens will be prepared for each lot in accordance with AASHTO T312, at the number of gyrations required by Table 4 herein (for Superpave only), or in accordance with Marshall design criteria, Table 6. Each set of laboratory compacted specimens will consist of two test portions prepared from the same field sample.

The sample of hot mix asphalt may be put in a covered metal tin and placed in an oven for not more than 30 minutes to maintain the heat. The compaction temperature of the specimens should be as specified in the JMF.

In addition to the hot mix asphalt samples, the Contractor shall take one, one-quart sample of the PG binder used to produce the hot mix asphalt at the start of the work. The PG sample shall be turned over to the Engineer on the first day of project production.

Testing

Bulk Specific Gravity - Two (2) laboratory fabricated sample specimens shall be tested for bulk specific gravity per sublot in accordance with AASHTO T166 or T331, whichever is applicable, for use in computing air voids and density. Air voids shall be computed in accordance with AASHTO T269.

Gradation and Asphalt Binder Content - The gradation and asphalt binder content of the mixture shall be measured for each sublot in accordance with the following:

Asphalt Binder Content – An extraction test be performed in accordance with AASHTO T164 or AASHTO T308 for determination of asphalt content. The weight of ash portion of the extraction test, as described in AASHTO T164, shall be determined as part of the first extraction test performed at the beginning of plant production; and as part of every tenth extraction test performed thereafter, for the duration of plant production. The last weight of ash value obtained shall be used in the calculation of the asphalt content for the mixture. If utilizing AASHTO T308 for asphalt content determination, the calibration process and calibration factor, as described in AASHTO T308, shall be determined as stated, prior to acceptance testing. A verification shall be performed as part of every twentieth test performed thereafter or when changes in the mix are apparent.

Gradation - Aggregate gradations shall be determined from mechanical analysis of extracted aggregate in accordance with AASHTO T 30 and AASHTO T27 (Dry Sieve).

The Dust-to-Effective Asphalt ratio shall be determined once for each sublot from the mechanical analysis of extracted aggregate and the asphalt binder content. The Dust-to-Effective Asphalt ratio shall be determined by the Engineer in accordance with AASHTO R35.

The Theoretical Maximum Specific Gravity of the mixture shall be measured for each sublot in accordance with AASHTO T209, Type C, D, or E container. Samples shall be taken on a random basis in accordance with ASTM D 3665. The value used in the field placed void computations shall be the average of the maximum specific gravity measurements for the lot.

Temperatures: Temperatures of the HMA shall be checked in the first three (3) haul units departing the production facility for each production day, and additionally once for each sublot. Additionally, temperatures may be checked to determine the temperatures of the dryer, the asphalt binder in the storage tank, the mixture at the plant, and the mixture at the job site for specification conformance.

VMA, VFA, and air voids, for each plant sample, will be determined by the Engineer in accordance with the applicable AASHTO test method. The VMA, VFA, and air voids for each sublot shall be computed by averaging the results of the two test specimens representing that sublot.

Acceptance of Plant Produced HMA - Acceptance of plant produced HMA material will be based upon plant air voids, Marshall stability and flow (if applicable), VMA, VFA, gradation, asphalt binder content, and temperature, and shall be determined by the Engineer in accordance with these specifications.

2. Field Placed HMA Material - HMA material placed in the field shall be tested for mat and longitudinal joint density on a completed street or public facility basis. The Engineer's testing personnel shall be certified by the New England Transportation Technician Certification Program (NETTCP), as HMA Paving Technicians or HMA Plant Technicians. The Engineer may conduct any necessary testing to monitor the specified density, uniformity and smoothness. A properly correlated density gauge may be used to monitor the pavement density in accordance with ASTM D2950 or ASTM 7113. Monitoring density with density gauges by the Engineer does not imply acceptance or rejection; the Contractor is ultimately responsible to meet the requirements of the specification.

Sampling - Density gauges may be used by the Engineer to determine density of the paving course mat and/or longitudinal joints. Cores of the material shall be minimized and only taken at the direction of the Engineer and approval of the City. Mat and longitudinal joint density tests will be located by the Engineer or their representative on a stratified random sampling basis for each street or facility paved. The length of the longitudinal paving joint will be divided into sub-lots for sampling and testing purposes. If more than one longitudinal joint is formed on a street, then the random sample length will be the total lineal feet of longitudinal joint placed. A mat and longitudinal joint test will be taken by the Engineer randomly from each of these sub-lot intervals. Sub-lots will be determined on the basis of five (5) sub-lots per one thousand (1,000) tons of material placed or a minimum of five (5) sub-lots from each street or facility paved. Sampling and testing for density will be conducted in the following manner:

Paving courses will be tested with the density gauge (for correlation), then sampled by coring the mat and the centerline of the longitudinal joint for confined edge joint construction, or on the hot side of the longitudinal joint when using notched wedge joint construction. A 6 inch diameter wet-core bit specifically designed for cutting pavement shall be used. The cores will be tested for density and thickness.

When sampling of the longitudinal joint for density determinations by coring, the core will be taken directly over the joint for confined edge construction, on the hot side of the longitudinal paving joint, or adjacent to the vertical edge of an existing longitudinal joint, or as directed by the Engineer.

A density sample will be tested from each sub-lot segment. The total width of the paved surface (curb to curb) will be determined at the longitudinal sub-lot location to sample and test for mat density. A transverse off-set distance from the centerline of the roadway will be established for mat density sampling and testing. The location, either right or left of centerline, will be based on whether a random number is "odd or even" (odd=left; even=right). When the offset location is within 2 foot of the pavement edge, curb, catch basin or structure, or 1 foot off a longitudinal joint, or 10 foot off a transverse joint, the sample shall be relocated.

For nuclear gauge test locations, four 60 second readings will be taken with the gauge turned 90 degrees for each increment. The average of the four readings will be reported as the density value for each

location. For non-nuclear density tests, five readings will be taken, after the first reading is taken the gauge will be moved up and to the right approximately 2" (the 2 o'clock position), three more readings will then be taken at the 4 o'clock, 8 o'clock, and 10 o'clock positions using the manufacturers operating procedures. The average of the five density values will be reported for each location.

If the results of the average density gauge readings for a street or pavement facility are below the threshold for 100% adjustment as indicated in Table 9 or Table 10, pavement cores may be removed as per this specification, and used for determining the actual pavement density. Pavement cores will only be removed if a written request is received from the Contractor within 14 calendar days of the City's receipt of the density report. If a written request is not received, the average density gauge readings will be utilized for payment adjustment.

In the event that a new density gauge needs be correlated for this project, cores should be taken from the mat and longitudinal joint representing the test locations. If previous core locations are available, the new density gauge should be correlated in accordance with the "re-correlation" procedure. If "re-correlation" is necessary, take four tests at quarter points around each of five previously cored and tested locations; making sure that the side of the nuclear or non-nuclear gauge is at the edge of the patched core location and firmly seated. Each test must be the average of four test increments turning the gauge 90 degrees.

All core samples shall be neatly cut with a core drill and water cooled bit where the cutting edge of the core drill bit shall be of hardened steel or other suitable material with diamond chips embedded in the metal cutting edge. The minimum diameter of the sample shall be 6 inches. Samples that are clearly defective, as a result of sampling, shall be documented and retained, then another sample taken for testing. The Contractor, Engineer or the Owner's agent shall furnish all tools, labor, and materials for cutting samples and filling the cored pavement. Cored holes shall be filled in a manner acceptable to the Engineer and within one day after sampling.

The average density will be used to determine the percent payment.

Resampling of the pavement shall be in accordance with applicable provisions of the

NETTCP Quality Assurance Technologist Manual, latest edition and these specifications.

With the exception of any Control Sections, if the Contractor is concerned about the test results obtained by the Engineer, the Contractor may request up to one time per street, that an equal number of random core samples be obtained and tested to supplement (not replace) the original core samples (or density gauge samples when bonus applies). The coring, patching and testing of the additional samples will be the responsibility of the Contractor. Cores for the mat and/or longitudinal joint density tests will be located by the Engineer and witnessed by the Contractor. Cores locations will be based on a new stratified random sampling plan for each street or facility paved in accordance with the procedures stated above. Upon approval of the coring operation, the Contractor will notify the Engineer 48 hours in advance of the cores being taken such that the Engineer can witness the sampling. The additional cores must be tested by a NETTCP certified HMA plant technician in the presence of the Engineer or his designated representative.

Only one (1) set of additional mat and/or longitudinal joint cores will be allowed on a street or lot.

Testing - The bulk specific gravity of each cored sample will be measured by the Engineer's NETTCP certified technician in accordance with AASHTO T166 or T331, whichever is applicable. The theoretical maximum specific gravity shall be the average maximum specific gravity for the lot in accordance with the plant-produced material section. The percent density of each sample will be determined in accordance with AASHTO T269, using the bulk specific gravity of each sample and the average theoretical maximum specific gravity. Retesting of pavement shall be in accordance with applicable provisions of the NETTCP Quality Assurance Technologist Manual, latest edition.

Adjustment Pay Schedule for Mat Density - The pay factor based on the density adjustment schedule will be applied to the bid price per ton for compacted mixtures greater than or equal to 1-1/2 inches thickness as shown in the contract award.

Table 9.
HOT MIX ASPHALT MAT DENSITY
Adjustment Schedule

Average Percent of Maximum Density (minimum 5 samples)	Percent Payment
100.0 - 98.1	98
98.0 - 95.0	102
94.9 - 92.0	100
91.9 – 89.0	90
88.9 – 87.0	75
86.9 or less	rejection

Adjustment Pay Schedule for Longitudinal Joint Density - The pay factor based on the joint density adjustment schedule will be applied to the bid price per ton for compacted mixtures greater than or equal to 1 1/2 inches thickness as shown in the contract award.

Table 10.
HOT MIX ASPHALT LONGITUDINAL-JOINT DENSITY
Adjustment Schedule

Average Percent of Maximum Density (minimum 5 samples)	Percent Payment
100.0 - 98.1	98
98.0 - 95.0	102
94.9 - 91.0	100
90.9 - 89.0	90
88.9 - 88.0	80
87.9 - 87.0	70
86.9 or less	50% or rejection

The total hot mix asphalt adjustment will be based on the weighted sum as follows:

.60 Mat Adjustment + .40 LJ Adjustment = Total HMA Adjustment

When the construction of the pavement does not include the construction of a longitudinal joint, the payment adjustment will be based on Table 9 only, no weighted sum will be calculated. Any bonus will be credited against any payment adjustment in the contract for HMA, but in no case will the payment for HMA exceed 100%.

Rejection of Inferior HMA The Engineer may at any time, notwithstanding previous plant acceptance, reject and require the Contractor to dispose of any batch of hot mix asphalt which is rendered unfit for use due to contamination, segregation, incomplete coating of aggregate, or improper mix temperature. Such rejection may be based on only visual inspection or temperature measurements. Similarly, the Engineer may at any time, notwithstanding field acceptance for mat density, reject and require the Contractor to correct any HMA pavement that was placed with unacceptable mat uniformity or paving joints due to low density, segregation, improper elevation, or tearing. In the event of such rejection, the Contractor and Engineer may take random split samples of the area(s) in question in the presence of the Engineer, and if it can demonstrate in the laboratory, in the presence of the Engineer, that such material/pavement was erroneously rejected, payment will be made for the material at the contract unit price.

3. Rounding - Numbers used in all calculations shall be carried to the correct significant figures and rounded as follows:

When the first digit after those you want to drop is 4 or less, that digit and all others to the right are dropped. Ex. 62.9437 to 3 significant digits = 62.9

When the first digit after those you want to retain is 5 or greater, that and all others to the right are dropped and the last digit retained is increased by one. Ex. 1.955234 to 3 significant digits = 1.96.

All Intermediate calculations should not be rounded and shall be reported to two more significant figures than the least number of significant figures in the data values.

Test Standards and technical look-up tables serve as first priority over these rounding rules.

4. Outliers - Due to the extremely low probability of an outlier occurring in a small number of samples representing the Lot, no outliers will be considered. If a result is suspect, it would be prudent to take the time to investigate the sampling, testing, equipment calibration, production, and construction operation to identify the cause of the suspect reading.

I. *MEASUREMENT*

Method of Measurement - The quantity of hot mix asphalt to be paid for shall be the measured by the ton complete in place. The quantity of each truck load shall be obtained from printed tickets indicating the recorded batch weights or certified truck scale weights that have been properly countersigned by an authorized representative of the Engineer at the time of delivery. HMA quantities shall be verified by the Engineer using HMA yield calculations which will include the in-place bulk specific gravity and actual area and nominal depth for the mixture placed.

J. *PAYMENT*

Basis of Payment

Payment shall be made at the contract unit prices per ton complete in place with any applicable adjustments. This payment shall be full compensation for furnishing and placing all quality hot mix asphalt materials, including tack coat where specified, hot-pour rubberized asphalt sealer, cutting of keyways or milling/stripping of pavement to produce neat joints, mechanical sweeping of streets and for all labor, tools, equipment, materials, and all incidentals necessary to complete the work. No consideration will be given for additional payment for small areas of sidewalk left incomplete during construction.

Adjustment for Density

Adjustment for mat and joint density shall be made when the HMA material varies from the specification target limits, but is within the tolerances stated in Sections H "Adjustment Pay Schedule for Density"; the material will be allowed to remain in place with the specified adjustment in payment with the exception of mixtures placed with mat density below 86.9 percent of maximum. Any bonus (102% payment for 95.0% to 98.0% density) will be credited against any payment adjustments in the contract for HMA, but in no case will the Payment for HMA exceed 100%.

PAY ITEM	DESCRIPTION	PAY UNIT
Bid Item 422.1	Superpave 9.5mm, Level 2 Top Course	TON
Bid Item 422.2	Superpave 12.5mm, Level 2 Binder Course	TON
Bid Item 422.3	Superpave 12.5mm, Level 3 Modified Top Course	TON

K. *TESTING REQUIREMENTS*

AASHTO T104 Soundness of Aggregates by Use of Sodium Sulfate or Magnesium Sulfate

AASHTO T11 Materials Finer than 75-um (No. 200) Sieve in Mineral Aggregates by Washing

AASHTO T96 Resistance to Degradation of Small Size Coarse Aggregate by Abrasion and Impact in the Los Angeles Machine

AASHTO T27 Sieve Analysis of Fine and Coarse Aggregates

AASHTO T255 Total Evaporable Moisture Content of Aggregate by Drying

AASHTO T2 Sampling of Aggregates

AASHTO M17 Mineral Filler for Bituminous Paving Mixtures

AASHTO T170 Recovery of Asphalt from Solution by Abson Method

AASHTO T331 Bulk Specific Gravity and density of Compacted Hot Mix Asphalt (HMA) using automatic vacuum sealing

AASHTO T110 Moisture or Volatile Distillates in Bituminous Paving Mixtures

AASHTO T245 Resistance to Plastic Flow of Bituminous Mixtures Using Marshall Apparatus

AASHTO T209 Theoretical Maximum Specific Gravity and Density of Bituminous Paving Mixtures

AASHTO T164 Quantitative Extraction of Asphalt Binder from Hot Mix Asphalt (HMA)

AASHTO T176 Plastic Fines in Graded Aggregates and Soils by Use of the Sand Equivalent Test

AASHTO T195 Determining Degree of Particle Coating of Bituminous-Aggregate Mixtures

AASHTO T166 Bulk Specific Gravity (Gmb) of Compacted Asphalt Mixtures Using Saturated Surface-Dry Specimens

AASHTO T269 Percent Air Voids in Compacted Dense and Open Asphalt Mixtures

ASTM D 2950 Density of Bituminous Concrete in Place by Nuclear Method

ASTM D 3665 Random Sampling of Paving Materials

ASTM D 3666 Inspection and Testing Agencies for Bituminous Paving Materials

AASHTO T287 Asphalt Binder Content of Asphalt Mixtures by the Nuclear Method

AASHTO T89 Determining the Liquid Limit of Soils

AASHTO T90 Determining the Plastic Limit and Plasticity Index of Soils

ASTM D 4791 Flat or Elongated Particles in Coarse Aggregate

ASTM E 178 Practice for Dealing with Outlying Observations

ASTM D5821 Determining the Percentage of Fractured Particles in Coarse Aggregate

AASTHO T304 Uncompacted Void Content of Fine Aggregate

AASHTO T30 Mechanical Analysis of Extracted Aggregate

AASHTO T202 Viscosity of Asphalts by Vacuum Capillary Viscometer

AASHTO T240 Effect of Heat and Air on a Moving Film of Asphalt (Rolling Thin Film Oven Test)

AASHTO T283 Resistance of Compacted Asphalt Mixtures to Moisture Induced Damage

AASHTO T308 Determining the Asphalt Binder Content of Hot Mix Asphalt (HMA) by the Ignition Method

The Asphalt Institute's Mix Design Methods for Asphalt Concrete Manual No. 2 (MS-2).

<u>ADDITIONAL REQUIREMENTS</u>

AASHTO M320 Standard Specification for Performance Graded Asphalt Binder

AASHTO M323 Standard Specification for Superpave Volumetric Mix Design

AASHTO R30 Standard Practice for Mixture Conditioning of Hot Mix Asphalt (HMA)

AASHTO R29 Grading or Verifying the Performance Grade of an Asphalt Binder

AASHTO R26 Standard Practice for Certifying Suppliers of Performance Graded Asphalt Binders

AASHTO R35 Standard Practice for Superpave Volumetric Design of Hot Mix Asphalt (HMA)

AASHTO T312 Determining the Density of Hot Mix Asphalt (HMA) Specimens by Means of the Superpave Gyratory Compactor

AASTHO T315 Determining the Rheological Properties of Asphalt Binder Using a Dynamic Shear Rheometer (DSR)

AASHTO T316 Viscosity Determinations of Asphalt Binder Using the Rotational Viscometer

1. METHOD OF TEST FOR BULK SPECIFIC GRAVITY OF AGGREGATE BLENDS WITH RAP

Scope

This test method covers the procedure to determine the bulk specific gravity (Gsb) of a combined aggregate blend with RAP used in a HMA mixture.

This test method may involve hazardous materials, operations, and equipment. This test method does not purport to address all of the safety problems associated with the test method's use. The test method user's responsibility is to establish appropriate safety and health practices and determine the applicability of regulatory limitations prior to use.

Referenced Documents

AASHTO Standards

T-2 Sampling Aggregates

T-84 Specific Gravity and Absorption of Fine Aggregates

T-85 Specific Gravity and Absorption of Coarse Aggregate

T-100 Specific Gravity of Soils

T-164 Quantitative Extraction of Bitumen from Bituminous Paving Mixtures

T170 Recovery of Asphalt from Solution by Abson Method

T-209 Maximum Specific Gravity of Bituminous Paving Mixtures

T-228 Specific Gravity of Semi-Solid Bituminous Materials (Pycnometer Method)

Other References

MS-2 Mix Design Methods for Asphalt Concrete by the Asphalt Institute

Terminology

Terms and Abbreviations. Definitions for terms and abbreviations shall be in accordance with the Standard Specifications.

Significance and Use

This test method is used to determine the bulk specific gravity of a combined aggregate blend with RAP used in HMA mixture.

The bulk specific gravity (Gsb) of a combined aggregate blend is calculated using an estimate of the bulk specific gravity of the aggregate in the RAP and the actual bulk specific gravity of the other aggregates.

The bulk specific gravity of an aggregate blend is used to perform a volumetric analysis on compacted HMA in accordance with the Mix Design Methods for Asphalt Concrete by the Asphalt Institute.

Apparatus

Apparatus shall be as stated in the referenced test methods.

Sampling

Sampling shall be as stated in the referenced test methods.

Procedure

Identify the coarse aggregate(s), fine aggregate(s) and RAP selected for use in the mix designs.

Identify and record the actual percentages for each of the aggregate components used in the combined aggregate blend of the mix design.

Obtain a representative sample of the coarse aggregate, fine aggregate mineral filler and RAP in accordance with the AASHTO procedures.

Determine and record the bulk specific gravity of each of the coarse aggregate(s) in accordance with AASHTO T-85.

Determine and record the bulk specific gravity of each of the fine aggregate(s) in accordance with AASHTO T-84.

Determine and record the maximum specific gravity of the RAP in accordance with AASHTO T-209, Type C, D, or E container.

Determine and record the asphalt content of the RAP using AASHTO T164.

Calculate and record the effective specific gravity of the RAP aggregate in accordance with the following:

Gse = (100 - Pbrap)/[(100/Gmmrap) - (Pbrap/Gbrap)]

Where:

Gse = Effective specific gravity of the RAP aggregate

Pbrap = Percent binder of the RAP

Gmmrap = Maximum specific gravity of the RAP

Gbrap = Specific gravity of asphalt in the RAP (AASHTO T228)

Calculate and record the effective specific gravity of the combined aggregate blend as follows.

GsbBlend = %CA1 + %CA2 + %FA1 + %FA2 + %BHF + %RAP

%CA1 + %CA2 + %FA1 + %FA2 + %BHF + %RAP

Gsb Gsb Gsb Gsb Gsb Gse

Where:

GsbBlend = Bulk specific gravity of the combined aggregate blend.

Gsb = Bulk specific gravity of each respective aggregate.

Gse = Effective specific gravity of the RAP.

%CA1 = Percent of aggregate blend that is coarse aggregate #1.

%CA2 = Percent of aggregate blend that is coarse aggregate #2.

%FA1 = Percent of aggregate blend that is fine aggregate #1.

%FA2 = Percent of aggregate blend that is fine aggregate #2.

%BHF = Percent of aggregate blend that is bag house fines.

%RAP = Percent of aggregate blend that is RAP.

Report

Report the Gsb of the combined aggregate blend to the nearest 0.001.

L. ***MEASUREMENT AND PAYMENT***

Item 422 - 427 will be paid for by the ton. Item 428 – 432.1 will be paid for by the square yard.

ITEM 434 SAWING PAVEMENT

A. ***DESCRIPTION***

The work under this item shall conform to the relevant provisions of Section 120 of the Standard Specifications and the following;

The work shall include the sawcutting of existing pavements in areas where shown on the plans, and as directed by the Engineer.

B. ***CONSTRUCTION METHOD***

The existing pavement shall be sawcut through its full depth, or to elevation of the abutting proposed pavement subgrade, whichever is lesser, to provide a uniform vertical surface for the proposed pavement joint with the existing pavement.

Saw cut edges which become broken, ragged or undermines as a result of the Contractor's operations shall be re-sawcut prior to placement of abutting proposed pavement at no additional cost to owner.

Sawcut bituminous concrete surfaces shall be sprayed or painted with a uniform thin coat of RS-1 asphalt emulsion immediately before placement of new bituminous concrete material against the surface.

C. ***EQUIPMENT***

The Contractor shall provide sawing equipment adequate in number of units and power to complete the sawing with a water cooled diamond edge saw blade or an abrasive wheel to the required dimensions.

D. ***MEASUREMENT AND PAYMENT***

Sawing pavement will be measured and paid at the unit price per linear foot bid therefore in the proposal.

ITEM 435 HOT POURED RUBBERIZED ASPHALT SEALER

A. ***DESCRIPTION***

Item 435 will be used in conjunction with Item 422 when directed by the Contracting Officer. This item will be used on the base and top course.

B. ***MEASUREMENT AND PAYMENT***

The method of payment for hot poured rubberized asphalt sealant shall be at the bid price per linear foot, complete in place.

ITEM 435.1 RANDOM CRACK SEALING

A. ***SCOPE OF WORK***

This item consists of furnishing all labor, equipment and materials necessary to perform all work in connection with the reshaping, cleaning and filling of construction and random cracks in bituminous concrete pavements, including vegetation removal and sterilization of cracks where necessary, as specified or directed by the Contracting Officer.

B. ***MATERIAL***

1. State Specifications M3.05.0
2. Federal Specifications S-S 164 or 1401, a hot poured joint sealer.
3. Bituminous treated hemp or jute roping or reclaimed Neoprene material ground to maximum size of ¼" x ¼".

C. ***EQUIPMENT***

Equipment used in the performance of the work required by this section of the specifications shall be subject to the approval of the Contracting Officer and maintained in a satisfactory working condition at all times.

1. Equipment for reshaping cracks will be vertical, spindle or rotary type cutter.
2. Air Compressor: Air compressors shall be portable and capable of furnishing not less than 90 lbs. Per square inch pressure at the nozzle. The compressor shall be equipped with traps that will maintain the compressed air free of oil and water.
3. Manually operated, gas powered air-broom or self-propelled sweeper designed especially for use in cleaning highway and airfield pavements shall be used to remove debris, dirt and dust from routed cracks.
4. Hand tools shall consist of brooms, shovels, metal bars with chisel shaped ends, and any other tools which may be satisfactorily used to accomplish this work.

5. Melting Kettle: The unit used to melt the joint sealing compound shall be double boiler, indirect fired type. The specifications between the inner and outer shell shall be filled with a suitable heat transfer oil or substitute having a flash point of not less than 600 degrees F. The kettle shall be equipped with a satisfactory means of agitating the joint sealer at all times. This may be accomplished by continuous stirring with mechanically operated paddles and/or by a continuous circulating gear pump attached to the heating unit. The kettle must be equipped with thermostatic control calibrated between 200 degrees F. and 550 degrees F.

6. Hand pouring pots must be equipped with mobile carriage and rubber shoe and have a flow control valve that allows all cracks to be filled to refusal so as to eliminate all voids or entrapped air, and not leave unnecessary surplus crack sealer on pavement surfaces.

7. Equipment for blowing clean, drying and rejuvenating sidewall of cracks and joints shall be a propane torch unit which operated 3,000 degrees F. and gas velocity of 3,000 feet per second.

D. ***PREPARATION***

1. Reshaping: All cracks 1/8" and wider shall be routed to a minimum depth of 1/2" and thoroughly cleaned and dried by a propane torch unit to remove all dirt, moisture, foreign material and loose edges from cracked wall.

2. Cracks over 1/2" in width do not require widening, however, cracked walls shall be refaced and then must be thoroughly cleaned and dried using a propane torch prior to sealing cracks as above.

3. Debris removal: All old material and other debris removed from the cracks shall be removed from pavement surface immediately by means of power sweepers or hand brooms or air brooms.

4. Vegetation: When cracks show evidence of vegetation, it shall be removed and sterilized by use of propane torch unit eliminating all vegetation, dirt, moisture and seeds.

5. All cracks of sufficient depth and 3/4" or over in width shall first be pre-filled with bituminous treated hemp or jute roping, or reclaimed material ground to maximum size of 1/4" x 1/4" to within 1" of top pavement before applying prepared joint sealer.

6. When necessary to allow vehicle traffic to pass over crack sealer prior to curing, dry portland cement shall be dusted over cracks to eliminate pick-up.

7. General: No crack sealing material shall be heated and applied in wet cracks or where frost, snow or ice is present nor when ambient temperature is below 40 degrees F.

E. ***PREPARATION OF SEALER***

Joint sealing material shall be heated and applied at temperature specified by the manufacturer and approved by the Contracting Officer.

F. ***INSTALLATION OF SEALER***

All cracks shall be sealed as specified herein, and the sealer shall be well bonded to the pavement. Unless otherwise directed, the cracks shall be completely filled flush with pavement, and not less than 1/4" below surface, without formation of voids or entrapped air. More than one application of crack sealer may be necessary to fill cracks to required level.

G. ***MEASUREMENT AND PAYMENT***

This Item shall be paid for at the contract unit price per linear foot.

ITEM 435.2 RANDOM CRACK SEAL, FIBER METHOD

A. ***SCOPE OF WORK***

The work covered by this section of the specification consists of furnishing all plant, labor, equipment and materials necessary to perform all operations in connection with the cleaning and sealing of construction and random cracks in bituminous concrete pavements, and vegetation removal and sterilization of cracks where necessary.

B. ***MATERIAL***

Crack sealer shall be an asphalt-fiber compound designed especially for improving strength and performance of the parent asphalt sealant.

1. Asphalt Sealant shall be AC-10 or AC-20 with a penetration of 75-100.
2. Fiber reinforcing materials shall be short-length polypropylene or polyester fibers having the following properties.
   a. Length - 10mm.
   b. Denier - 15 dpf
   c. Color - Natural
   d. Crimp - none
   e. Tenacity - 4 gpd

Asphalt-fiber compound shall be mixed at a rate of 5-8% fiber weight to weight of asphalt cement. This compound having the same chemical base provides compatibility and exhibits excellent bond strengths. The fiber functions to redistribute high stress and strain concentrations that are imposed on the sealant by thermal sources, traffic leading, etc.

C. *EQUIPMENT*

Equipment used in the performance of the work required by this section of the specification shall be subject to the Contracting Officer and maintained in a satisfactory working condition at all times.

Air Compressor: Air compressors shall be portable and capable of furnishing not less than 100 cubic feet of air per minute at not less than 90 lbs. per square inch pressure at the nozzle. The compressor shall be equipped with traps that will maintain the compressed air free of oil and water.

Manually operated, gas powered air broom or self-propelled sweeper designed especially for use in cleaning highway and airfield pavements shall be used to remove debris, dirt, and dust from cracks.

Hand tools shall consist of brooms, shovels, metal bars with chisel shaped ends, and any other tools which may be satisfactorily used to accomplish this work.

Melting Kettle: The unit used to melt the joint sealing compound shall be double boiler, indirect fired type. The space between the inner and outer shells shall be filled with a suitable heat transfer oil or substitute having a flash point of not less than 600 degrees F. The kettle shall be equipped with a satisfactory means of agitating the joint sealer at times. This may be accomplished by continuous stirring with mechanically operated paddles and/or by a continuous circulating gear pump attached to the heating unit. The kettle must be equipped with thermostatic control calibrated between 200 degrees F. and 500 degrees F.

D. *PREPARATION*

Debris Removal: All old material and other debris removed from the cracks shall be removed from pavement surface immediately by means of power sweepers, hand brooms or air brooms.

Vegetation: When cracks show evidence of vegetation it shall be removed and sterilized by use of propane torch unit, eliminating all vegetation, dirt, moisture, and seeds.

General: No crack sealing material shall be applied in wet cracks or where frost, snow, or ice is present, nor when ambient temperature is below 40 degrees F.

E. *PREPARATION OF SEALER*

Joint sealing material shall be heated and applied at a temperature specified by the manufacturer and approved by the Contracting Officer.

F. *WORKMANSHIP*

All workmanship shall be of the highest quality; any excess or spilled sealer shall be removed from the pavement by approved methods and discarded. Any workmanship determined to be below the high standards of the particular craft involved will not be accepted, and will be corrected and/or replaced as required by the Contracting Officer in charge.

G. *MEASUREMENT AND PAYMENT*

Measurement for this bid item shall be by the linear foot and shall be the actual number of feet of sealer applied to the pavement. Payment shall be at the unit price bid in the proposal and shall be complete payment for the

entire item including furnishing, preparation and placing of materials, labor, and equipment to be used on this project.

ITEM 436 RESURFACE TRENCHES TEMPORARY

ITEM 436.01 RESURFACE TRENCHES PERMANENT

A. ***SCOPE OF WORK***

The work under this section shall include furnishing and installing hot plant mixed bituminous concrete as temporary or permanent resurfacing on the complete width of the trench. This work shall be as specified herein, as shown on the plans or as directed by the Contracting Officer.

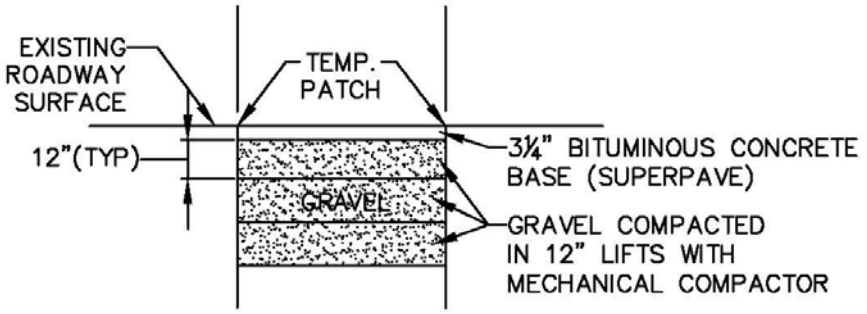

TEMPORARY PATCH

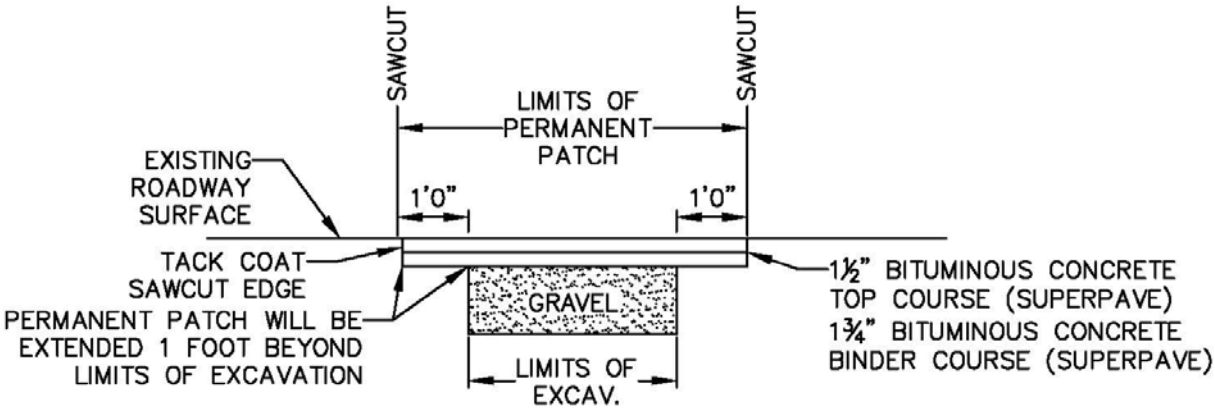

NOTE:
PERMANENT PATCH FOR ROADS HAVING A PAVING BLOCK OR CONCRETE BASE SHALL INCLUDE A LAYER OF CONCRETE EQUAL TO THE DEPTH OF THE EXISTING CONCRETE OR PAVING BLOCK. IN SUCH CASES THE DEPTH OF THE GRAVEL BACKFILL SHALL NOT BE LESS THAN 12 INCHES.

PERMANENT PATCH

TYPICAL TEMPORARY/PERMANENT PATCH DETAIL FOR ROADWAY

B. ***MATERIALS***

All bituminous concrete shall conform to the requirements as set forth in the most recent edition and amendments thereto of the Commonwealth of Massachusetts Standard Specifications for Highways and Bridges (MSSHB). Bituminous concrete shall conform to Section M3.11.00, of the above-mentioned specifications.

C. ***TEMPORARY REPAIRS***

As soon as the excavation has been backfilled and compacted, a temporary repair shall be made. Temporary paving shall be binder course conforming to the above-mentioned specifications and shall be placed in two (2)-inch courses. The second course shall be compacted to match existing pavement so that it is hard enough and smooth enough to be safe for pedestrian travel over it. Likewise, it must be hard enough and smooth enough for vehicular traffic to pass safely over it at the legal rate of speed. The contractor shall maintain the temporary paving until the permanent paving is placed.

In the event there is unacceptable maintenance of temporary repairs, the Contractor will be notified of those situations. Upon notification, the Contractor will make the required improvements within twenty-four (24) hours. In emergency situations, the City will make immediate repairs and the Contractor will be billed directly. All temporary material shall conform closely to the level of the adjoining paved surface and shall be compacted so that it is hard enough and smooth enough to be safe for pedestrian and vehicular travel.

The maximum length of time a trench or other excavation shall remain open without temporary pavement is five (5) working days or as the Contracting Officer requests. In all cases, the Contractor shall complete the temporary paving before moving to another work location.

When trenches are one hundred (100) feet or more in length, temporary repair requirements are as follows:

The trench shall be saw cut in a straight line a minimum of (12) inches beyond

each side of the trench and the saw cut areas shall be removed and disposed of.

When one side of the trench is within five (5) feet of the curb or berm line, the temporary patch shall extend to the face of the granite curb or one (1) foot from the bituminous berm. After the 95% compaction has been achieved, these trenches shall be paved with a self-propelled mechanical spreader and rolled with a power-driven steel wheel roller.

D. ***PERMANENT SURFACE REPAIR***

Permanent repairs shall be completed within a period of not less than ninety (90) days but nor more than one hundred twenty (120) days from the date of the temporary patch in accordance with the following schedule, unless otherwise directed by the Contracting Officer:

E. ***SCHEDULE OF PERMANENT PATCHING***

TEMPORARY PATCH PLACED	PERMANENT PATCH BY
April 1 - April 30	August 1
May 1 - May 31	September 1
June 1 - June 30	October 1
July 1 - July 31	November 1
August 1 - August 31	November 15
September 1 - September 30	November 15
October 1 - October 15	November 15
October 15 - December 30	May 15; Following year
December 30 - April 1	May 15

The permanent patch shall be extended one (1) foot on all sides of the temporary patch area. The pavement shall be cut in a neat, straight line with a pavement saw only. The cut shall be square or rectangular with edges parallel and perpendicular to the trench line or as directed by the Contracting Officer. Cuts shall be straight and vertical.

A tack coat shall be applied to the vertical faces of the existing pavement before placing permanent patch. A permanent patch material shall be applied in two (2) courses in accordance with the following thickness chart:

F. ***BITUMINOUS CONCRETE PAVEMENT COURSE THICKNESS CHART (IN INCHES)***

	Binder Course	Top Course
Roadway up to 12% grade	2"	1.5" or As Directed
Roadway from 12% to 16% grade	2.25"	2" or As Directed
Roadway 16% and over	2.75"	2" or As Directed
Driveway	1.5"	1"
Sidewalk	1"	1"

(NOTE: Thickness depths are measured after compaction.)

Where existing pavement thickness is greater than that indicated on the chart, the contractor shall match existing thickness or as directed by the Contracting Officer. However, the binder will be placed in courses NOT exceeding 2-1/2 inches. Multiple binder courses will be laid if the existing thickness conditions warrant.

When two (2) or more openings are made in sequence with fifteen (15) feet or less between the adjacent openings, the Contractor shall neatly cut out and remove the area of pavement between these adjacent openings and shall patch the entire area as one trench.

When trenches are one hundred (100) feet or more in length, permanent repair requirements are as follows:

The minimum repair width shall be eight (8) feet.

When one side of the trench is within five (5) feet of the curb or berm line, the permanent patch shall extend to the face of the granite curb or one (1) foot from the bituminous berm.

These trenches shall be paved with a self-propelled mechanical spreader and rolled with a power-driven steel wheel roller per either of the following two (2) methods:

Method 1 – The trench shall be saw cut in a straight line a minimum of twelve (12) inches beyond each side of the trench to a minimum width of eight (8) feet. The temporary patch and saw cut area shall be removed and replaced with three and one-quarter (3.25) inches of hot mix asphalt pavement, 1.75 inches of binder course and 1-1/2 inches of top course. If any side of the trench is within five (5) feet of the curb or berm, the cut shall extend to the granite curbing or one (1) foot out from the berm. Trench ends shall be straight and square. The edges of the trench shall be thoroughly cleaned and shall be completely coated with an approved emulsion.

Method 2 – If, in the opinion of the City inspector, the three and one-quarter (3.25) inch hot mix temporary patch has remained structurally sound, an area within the limits prescribed in Method 1 shall be milled to a depth of 1-1/2 inches. A tack coat or CRS-1 of RG-1 asphalt emulsion shall be applied and 1-1/2 inches of hot mix top course shall be laid and rolled to meet the pre-existing grades and the original profile of the street.

The contractor shall be required to correct any trench settlements and/or faulty pavement patches for a period of five (5) years after the permanent patch is placed, at the direction of the Contracting Officer.

In the event of a failed permanent patch, the Contractor shall be responsible for fully removing the patch, regrading the subgrade and recutting the trench edges, if necessary, prior to installing a new permanent patch. Spot repair of a failed permanent patch will not be acceptable.

If, during construction, break backs occur, the bituminous concrete shall be cut back to a sufficient point where the edges are smooth and straight. Where, in the opinion of the Contracting Officer, the break backs are extensive, the ENTIRE TRENCH LENGTH shall be evenly cut back so to insure two parallel edges.

Granite curb requiring resetting shall be excavated so that the present curb can be removed without damage. When resetting the length of any section of curb or edging, the pavement shall be cut neatly and straight in order to accommodate curb installation.

Settlement of curbing shall be repaired by the contractor at no cost to the City.

Where cement concrete or paving block is encountered in roadways (either as wearing surface or as base for bituminous concrete), it shall be replaced with binder at a thickness equal to the existing rigid road base to a maximum depth of eight (8) inches. When replaced as the base paving, the binder shall be so placed as to allow for the subsequent permanent paving courses to be placed over it.

Where cement concrete is encountered in sidewalks, it shall be replaced at a minimum thickness of four (4) inches. The concrete shall be poured and finished to meet and match the adjacent panels. All sidewalks shall be poured on an eight (8) inch gravel base. All cuts in concrete sidewalks shall be from the nearest joint or pour

line for the full width of the sidewalk. Expansion joint filler, ½ inch thick, shall be placed at all points where the sidewalks abut buildings or permanent structures at thirty (30) LF intervals unless otherwise directed by the Contracting Officer.

All work shall be in compliance with the City of Worcester Standard Specifications and Details.

After completion of permanent patch repairs, the Contractor will file a Certificate of Permanent Restoration Form attesting that the pavement repair has been completed in full compliance with these regulations.

G. *SPECIAL CONDITIONS FOR PERMANENT RESTORATION FOR STREETS PAVED FIVE (5) YEARS OR LESS*

Upon completion of the water, sewer and/or utility work and the placement of the protective envelope, the trench shall be filled with excavatable Control Density Fill (CDF), Type 2E. For rigid base roads, the trench shall be filled with CDF to the bottom of the rigid base. Binder in two (2) inch lifts shall be placed through the concrete up to the 1-1/2 inch top course to a maximum depth of eight (8) inches. For non-rigid base roads, CDF shall be poured to a depth of three and one-quarter (3.25) inches below the road surface, 1.75 inches of compacted binder and 1-1/2 inch of top course shall then be installed.

After one (1) seasonal movement, the permanent patch shall be infrared treated by a contractor certified by the City of Worcester in the infrared process. Upon completion, the Contractor shall provide a certificate to the D.P.W. as proof of infrared treatment.

All sidewalks excavated must be replaced entirely, in kind, in accordance with City Standards and Specifications. Pedestrian ramps must be installed where applicable, in accordance with Federal law.

H. *MEASUREMENT AND PAYMENT*

These items shall be paid for by linear feet.

ITEM 436.1 MISCELLANEOUS INFRARED BITUMINOUS CONCRETE

A. *SCOPE OF WORK*

The work to be done under this section consists of the miscellaneous infrared repair of bituminous concrete surfaces. This item includes cleaning and heating of the work area, scarification, placement of the specified materials, compaction, joint and surface sealing of heated areas.

B. *GENERAL*

The bituminous concrete patching material used for various applications required under the contract shall conform to the following:

Massachusetts Highway Department Standard Specifications for Highways and Bridges (MSSHB), SUPERPAVE, bituminous concrete mix.

All mix formulation must consist of 100% virgin materials. Reclaimed asphalt pavement (R.A.P.) and/or reheating of bituminous concrete mixes are unacceptable in the performance of work under this concrete.

Consistency of bituminous concrete must be maintained. The Contractor will periodically be required to submit samples to be obtained from the job sites.

C. *CONSTRUCTION METHODS*

This work shall be performed in the following manner:

1. Using appropriate methods, prior to the commencement of any work, the Contractor shall adequately clean the area to be repaired.
2. The Contractor shall then heat the entire section to be repaired in conjunction with the adjacent area by carefully positioning a pre-approved infrared heater, not to exceed 15,000 BTU's per square foot, per hour, to achieve a consistent plasticized surface condition. Excessive heating of the pavement shall be avoided. The Contractor shall remove all unsuitable oxidized material and replace same with "virgin" bituminous concrete.
3. A suitable proven recycling agent additive of a sufficient amount as approved will be introduced to the softened area. Scarification will then be performed to produce a workable mix condition uniformly incorporating the recycling agent.

4. Specified bituminous concrete mixes must be obtained from an on site infrared heated storage unit capable of maintaining the stored asphaltic material(s) at a near constant temperature throughout the working day. Under no circumstances shall any asphalt mix be used that registers a temperature of less than 250 degrees F.

5. After the proper consistence of the paving material and recycling agent has been properly attained, the combined mixture shall be raked to the desired grade and compacted. Compaction shall be accomplished by use of a designated static and/or vibratory steel wheeled roller of adequate weight to establish a uniform density comparable to that of the adjacent surface within the work area. The repaired section shall be smooth and even with the surrounding pavement.

6. A penetrating asphalt emulsion will be applied by hand to the edges of the entire perimeter of the finished area.

D. ***MEASUREMENT AND PAYMENT***

Infrared repair of bituminous concrete roadway shall be measured in place and shall be paid at the unit price per square yard bid in the proposal.

ITEM 437 SPEED HUMPS

A. ***GENERAL***

The scope of work to be performed under this section shall consist of the installation of speed humps using bituminous concrete. This item includes cleaning, scarification of existing pavement along gutter lines, replacement of bituminous concrete, compacting and joint and surface sealing using tack coat as shown on the typical Speed Hump.

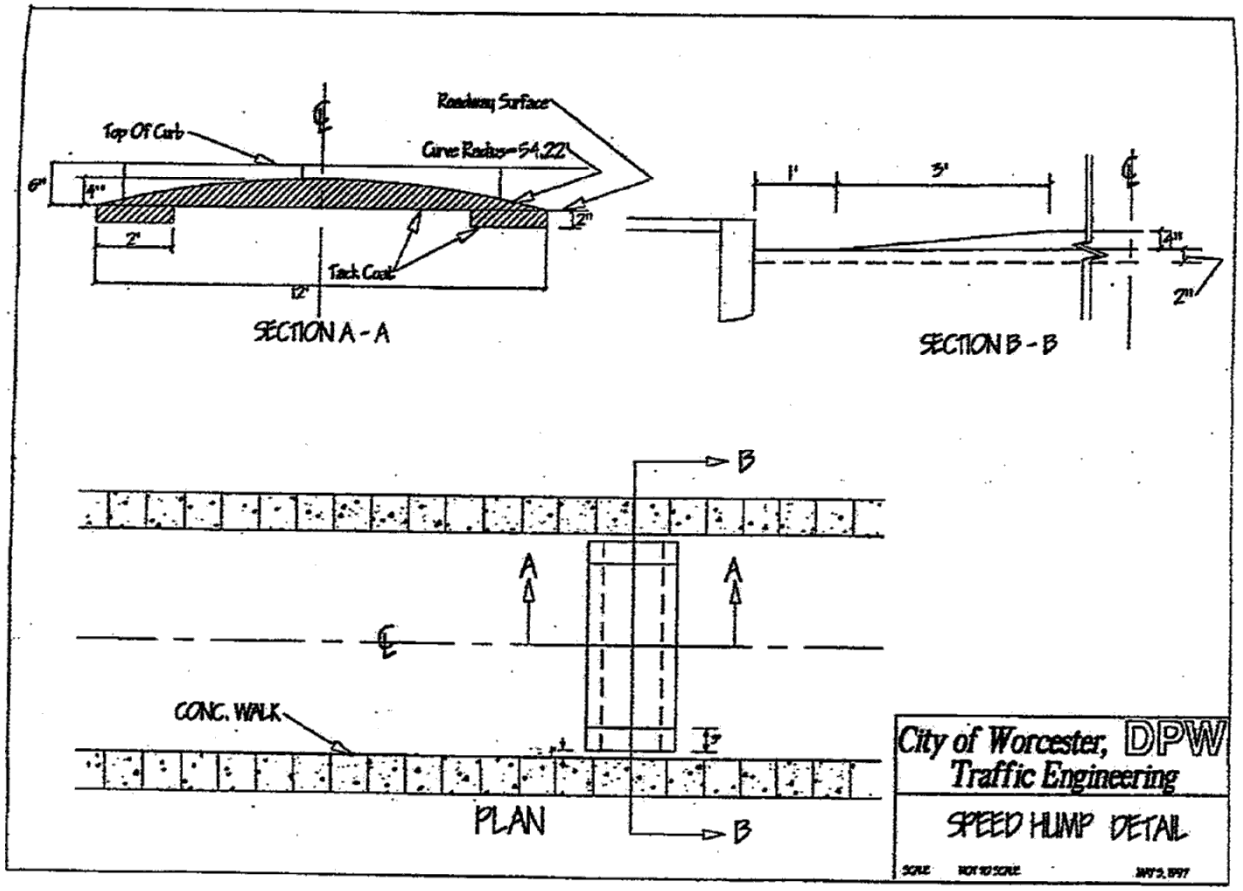
Roadway Surface
Top Of Curb
Curve Radius=54.22'
6"
4"
2"
2'
12'
Tack Coat
SECTION A - A
1'
3'
4"
2"
SECTION B - B
B
A
A
CONC. WALK
PLAN
B
City of Worcester, DPW
Traffic Engineering
SPEED HUMP DETAIL

The bituminous concrete material used for the installation of speed humps required under this contract shall conform to the following:

1. Massachusetts Highway Department (MHD) Standard Specifications for Highways and Bridges, SUPERPAVE bituminous concrete mix.
2. All mix formulations must consist of 100% virgin materials. Reclaimed asphalt pavement (R.A.P.) and/or reheating or bituminous concrete mixes are unacceptable in the performance of work under this contract.
3. Consistency of bituminous concrete must be maintained. The Contractor will periodically be required to submit samples to be obtained from the job site.

B. ***METHOD OF CONSTRUCTION***

The work shall be performed in the following manner:

1. Using appropriate methods, prior to the commencement of any work, the Contractor shall clean the area in which speed humps are to be installed.
2. The Contractor shall then cold plane the street with an approved cold planing machine or grinder to the appropriate depth, width and length. The excavated area will then be filled with SUPERPAVE bituminous concrete top course placed in two lifts and thoroughly compacted with a steel wheeled roller, as shown on the typical detail or directed by the Contracting Officer. Excavated materials resulting from the operation shall be removed and disposed of by the Contractor or as otherwise directed by the Contracting Officer.
3. All grinding shall be done during daylight hours unless otherwise specified.
4. After the proper consistence of the paving material has been attained, the combined mixture shall be raked to the desired grade and compacted. Compaction shall be accomplished by use of a designated static and/or vibratory steel wheeled roller, with a weight not to exceed ten ton, to establish a uniform density comparable to that of the adjacent surface with the work area.
5. The Contractor shall exercise due care in not to disturb or break existing manholes, valve boxes, catch basins, monument boxes, castings, etc. All castings broken shall be replaced or repaired at the Contractor expense.
6. Tack coat shall be applied to the edges of the entire area designated for installation of the speed humps.

C. ***MEASUREMENT AND PAYMENT***

Item 437 will be paid for by the linear foot for speed humps complete in place across the roadway.

ITEM 438 BITUMINOUS CONCRETE BERM MACHINE PLACED

ITEM 438.5 BITUMINOUS CONCRETE BERM REPAIR

A. ***GENERAL***

Work to be done under this item shall conform to the applicable provisions of Section 470, (MSSHB), Berm Worcester Standard as shown on detail titled Typical Half Section thru Bituminous Concrete and Berm and is to be made of bituminous concrete, as specified for payment, SUPERPAVE, dense mix carefully placed by machine.

All surfaces and angles of the template used with the berm to be smooth and straight, carefully formed, all as shown in Typical Section with Berm Detail.

The bituminous concrete berm shall be well consolidated.

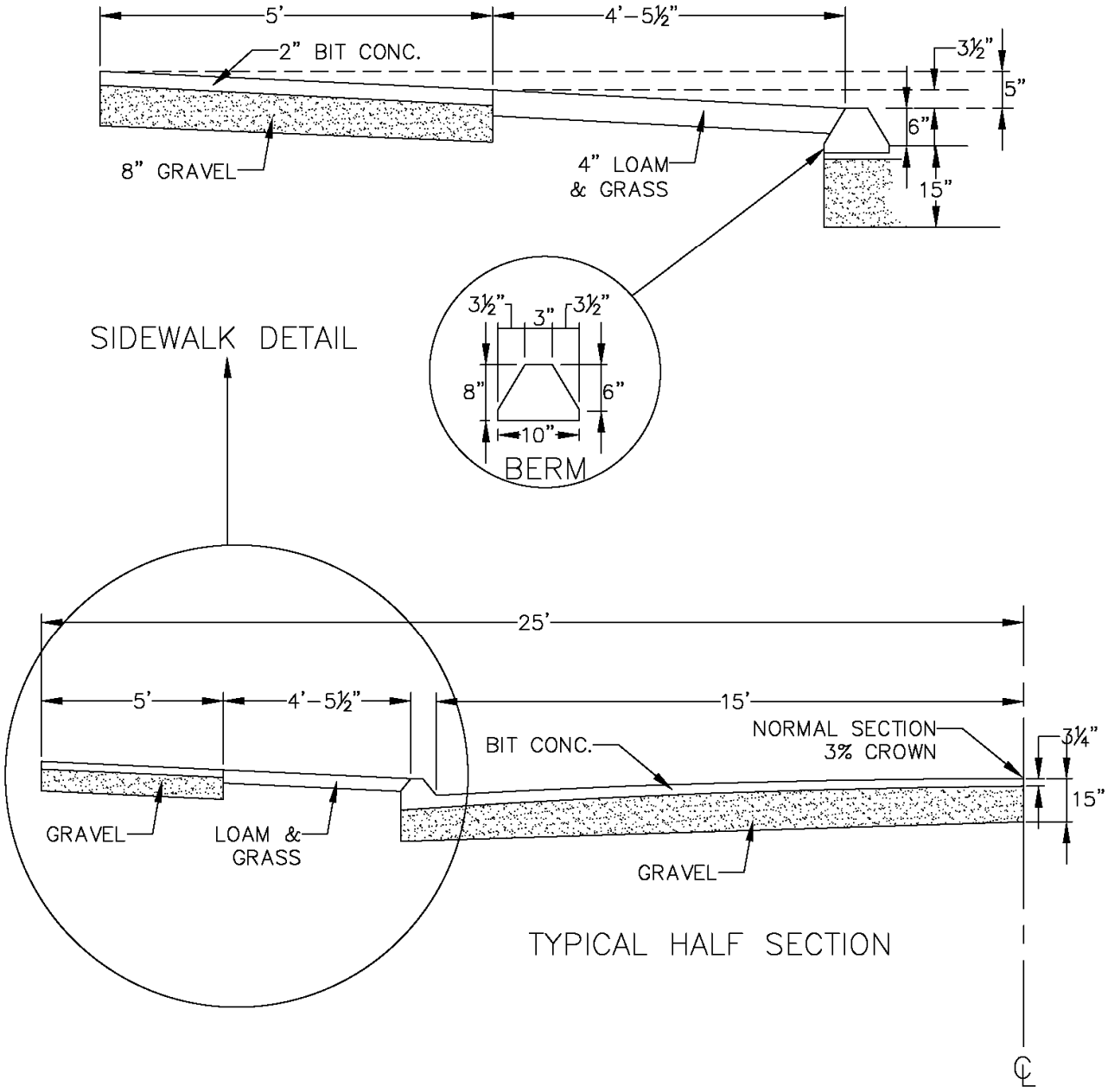

TYPICAL HALF SECTION THROUGH BITUMINOUS CONCRETE & BERM 30' ROADWAY

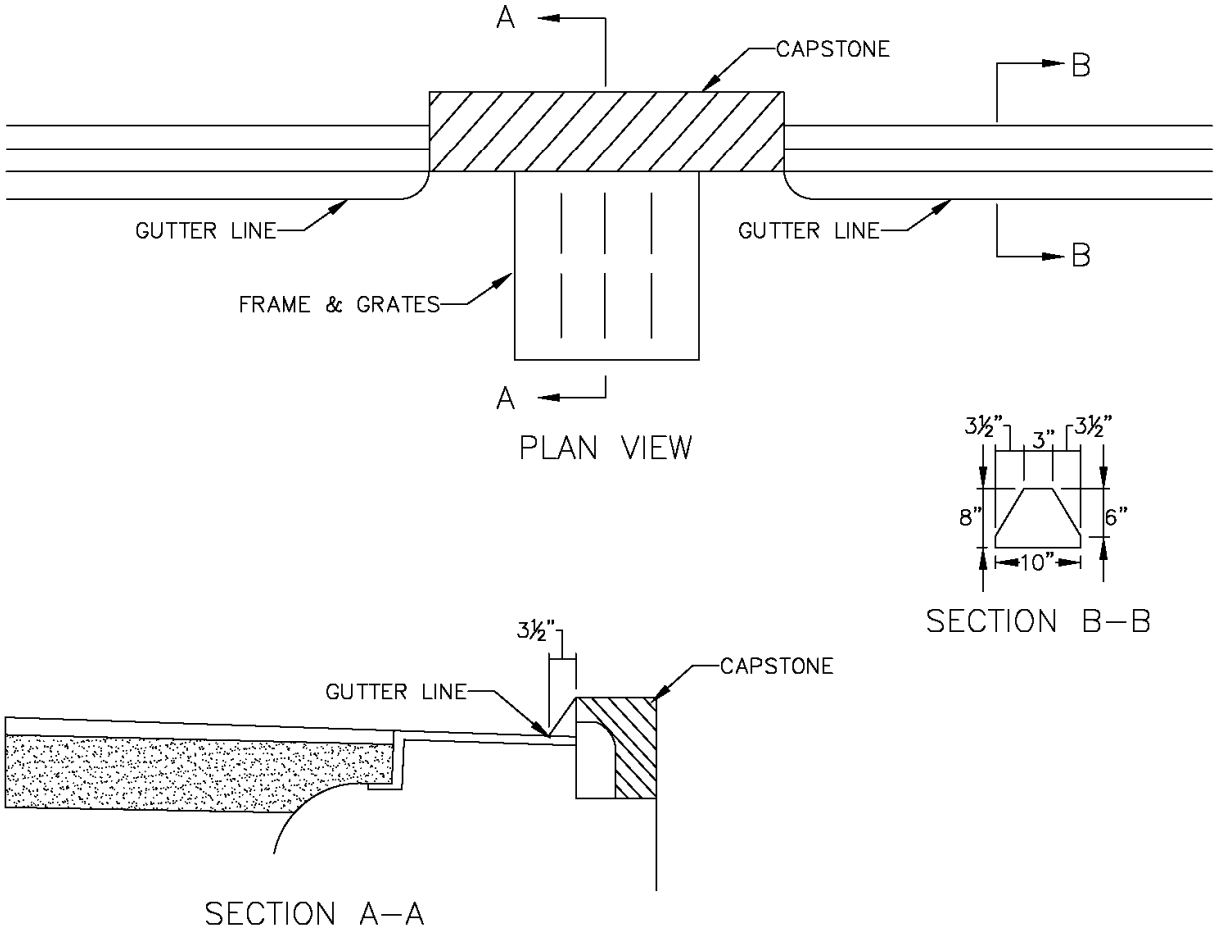

TYPICAL SECTION THROUGH CATCH BASIN & BERM

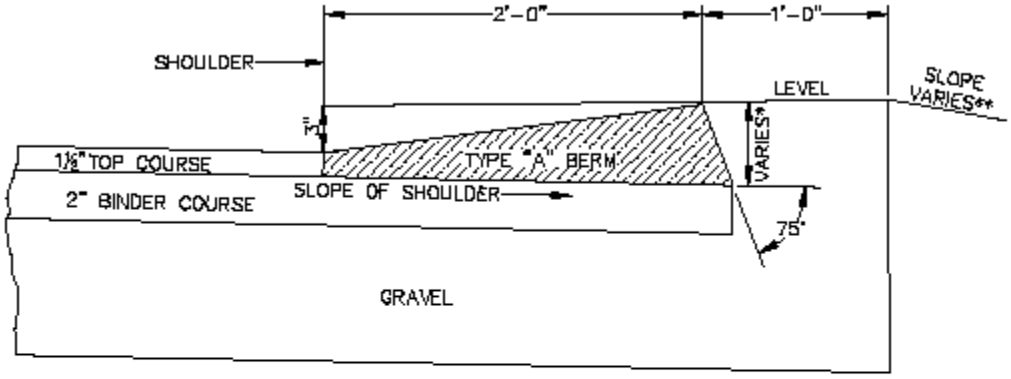

*THIS DIMENSION VARIES WITH THE THICKNESS OF THE TOP COURSE AND SLOPE OF SHOULDER

**SEE TYPICAL SECTIONS FOR PROJECT

BITMUMINOUS CONCRETE BERM - TYPE "A"

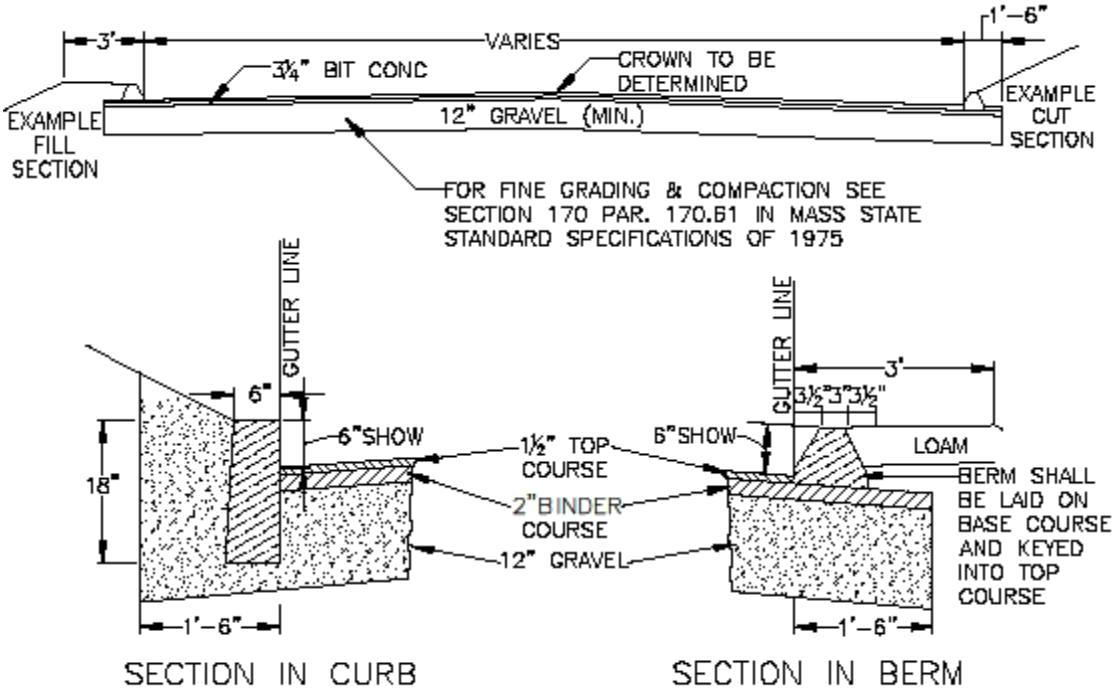

TYPICAL SECTION WITH BERM

B. ***MEASUREMENT AND PAYMENT***

Bituminous concrete berm machine placed shall be measured in place and shall be paid at the unit price per linear foot bid therefore in the proposal.

The work to be done under Items 440 through 446 shall conform to the applicable provisions of Section 701 and M4, (MSSHB), Cement Concrete (Air Entrained, 4,000 p.s.i., 3/4", 610).

ITEM 440 NEW CONCRETE SIDEWALK 4 INCH

ITEM 441 REPLACING BITUMINOUS CONCRETE SIDEWALK W/ CEMENT CONCRETE SIDEWALK 4 INCH

A. ***GENERAL***

The work under this item shall conform to the relevant provisions of Sections 701 (MSSHB) and the following:

Payment for Items 441 shall constitute full payment for all labor and materials required to remove bituminous concrete sidewalks and construct new cement concrete sidewalks, including all gravel, excavation, fine grading, compacting and brooming to the grade specified by the Contracting Officer. No additional payments for these items will be made under their individual bid item prices.

All new concrete sidewalk surfaces shall be coated with *Salt Guard*, or equivalent.

B. ***MEASUREMENT AND PAYMENT***

This item will be paid for at the contract unit price per square yard. This price shall include all labor, materials, equipment, and incidental costs required to complete the work.

ITEM 442 CONCRETE SIDEWALK REPAIR

ITEM 442.1 CONCRETE SIDEWALK REPAIR < 25 L.F.

ITEM 443 REPLACING BITUMINOUS CONCRETE DRIVEWAY W/ CEMENT CONCRETE DRIVEWAY 6 INCH

A. ***GENERAL***

The work under this item shall conform to the relevant provisions of Sections 701 of the Standard Specifications and the following:

Payment for Items 443 shall constitute full payment for all labor and materials required to remove bituminous concrete driveways and construct new cement concrete driveways, including all gravel, excavation, fine grading, compacting and brooming to the grade specified by the Contracting Officer. No additional payments for these items will be made under their individual bid item prices.

Any walks or drives outside the limits of work and damaged by the Contractor shall be repaired by the Contractor and he shall not receive any compensation for this work.

The concrete walks shall be four (4) inches thick.

Expansion joints 1/2 inch thick shall be placed at all points where the sidewalk abuts buildings or other permanent structures and at 30 linear foot intervals or as directed by the Contracting Officer.

The expansion joint material shall be installed from just below the finished grade and shall extend to the sub-grade.

Joints shall be scored at intervals at the discretion of the Contracting Officer. For normal sidewalk work, these joints shall be installed at intervals equal to the width of the sidewalk but not to exceed five (5) feet.

Finished concrete surface shall be adequately protected for curing and defacement by a method approved by the Contracting Officer.

Under Item 442 & 446 any unsatisfactorily sub-base in the sidewalk area, as directed by the Contracting Officer, shall be removed and paid under Item 116 excavation. Said voids or substantial grade changes shall be filled with gravel and paid under Item 126 gravel. Said areas shall be fine graded, rolled and finished and paid under Item 402 fine grading, rolling and finishing.

Any sub-base disturbed by the Contractor without the Contracting Officer's direction shall become the Contractors responsibility to replace with approved gravel (graded and compacted).

Payment for Items 440 thru 446 shall constitute full payment for all labor and materials required to construct new concrete sidewalks or driveways, including all gravel, excavation, fine grading, compacting, and broom finish to the grade specified by the Contracting Officer or his designated representative. No additional payments for these items will be made under their individual bid item prices.

All new concrete sidewalk surfaces shall be coated with *Salt Guard*, or equivalent.

B. ***MEASUREMENT AND PAYMENT***

This item will be paid for at the contract unit price per square yard. This price shall include all labor, materials, equipment, and incidental costs required to complete the work. No consideration will be given for additional payment for small areas of sidewalk left incomplete during construction.

ITEM 444 NEW CONCRETE DRIVEWAY 6 INCH

ITEM 445 STAMPED CEMENT CONCRETE ACCENT STRIP

A. ***GENERAL***

The work under this item shall conform to the relevant provisions of Sections 701 and M4 of the Standard Specifications and the following:

Stamped cement concrete accent strips shall consist of red brick integrally colored (i.e., incorporated throughout the mix) stamped cement concrete as shown on the plans.

Prior to ordering materials, the Contractor shall submit color samples of each cement concrete type to the Engineer and the City of Worcester for approval. Samples of other materials to be used and samples for testing shall be submitted as requested by the Engineer.

All new concrete sidewalk surfaces shall be coated with *Salt Guard*, or equivalent.

B. ***MATERIALS***

Colored Admixture for integrally colored concrete shall be:

1. Colored, water-reducing, admixture containing no calcium chloride with coloring agents that are lime proof and UV resistant. Colored admixture shall conform to the requirements of ACI 303.1, ASTM C979, ASTM C494, and AASHTO M194.
2. Color to be selected by Engineer.

Curing Compound for Integrally Colored Concrete: Curing compound shall comply with ASTM C309, be suitable for exterior use and of same manufacturer as colored admixture, for use with integrally colored concrete.

C. ***CONCRETE COLOR:***

Cement: Color shall be white.

Sand: Color shall be locally available natural sand

Colored Admixture: Deep Red Color Base as selected by the Engineer in consultation with the City of Worcester.

Colored Hardener: Deep Red Color Hardener as selected by the Engineer in consultation with the City of Worcester.

Stamp/Imprinting Pattern: Used brick pattern as selected by Engineer in consultation with the City of Worcester.

Powder Antiquing Release Agent: As selected by Engineer from manufacturer's standard colors.

Curing Compound: Curing & sealing shall be as per the manufacturer’s recommendations.

D. ***APPLICATION***

Concrete mix design:

Minimum Cement Content: 5 sacks per cubic yard of concrete.

Slump of concrete shall be consistent throughout Project at 4-inches or less. At no time shall slump exceed 5-inches. If super plasticizers are allowed, slump shall not exceed 8-inches.

Do not add calcium chloride to mix as it causes mottling and surface discoloration.

Supplemental admixtures shall not be used unless approved by manufacturer.

Add colored admixture to the mix according to manufacturer's written instructions in premeasured bags, not by weight of cement content.

E. *INSTALLATION*

Install concrete according to requirements of Division 3 Section M4.02.00 Cement Concrete.

Do not add water to the mix in the field.

Surfaces shall be uniformly stamped/ imprinted, applying the pattern according to the tool manufacturer's instructions. Touch-up pattern and finish edges with hand tools as necessary.

Apply curing and sealing compound for integrally colored concrete according to manufacturer's instructions using manufacturer's recommended application techniques. Apply curing and sealing compound at consistent time for each pour to maintain close color consistency. Curing compound shall be same color as the colored concrete and supplied by same manufacturer of the colored admixture.

Precautions shall be taken in hot weather to prevent plastic cracking resulting from excessively rapid drying at surface as described in CIP 5 *Plastic Shrinkage Cracking* published by the National Ready Mixed Concrete Association. Do not cover concrete with plastic sheeting.

Minor variations in appearance of colored concrete, which are similar to natural variations in color and appearance of uncolored concrete, are acceptable.

F. *MEASUREMENT AND PAYMENT*

Stamped cement concrete accent strips will be paid for at the Contract unit price per square yard, which price shall include all labor, materials, equipment and incidental costs required to complete the work. No separate payment will be made for the joint sealer or backer rods, but all costs in connection therewith shall be included in the unit price bid. No consideration will be given for additional payment for small areas of sidewalk left incomplete during construction.

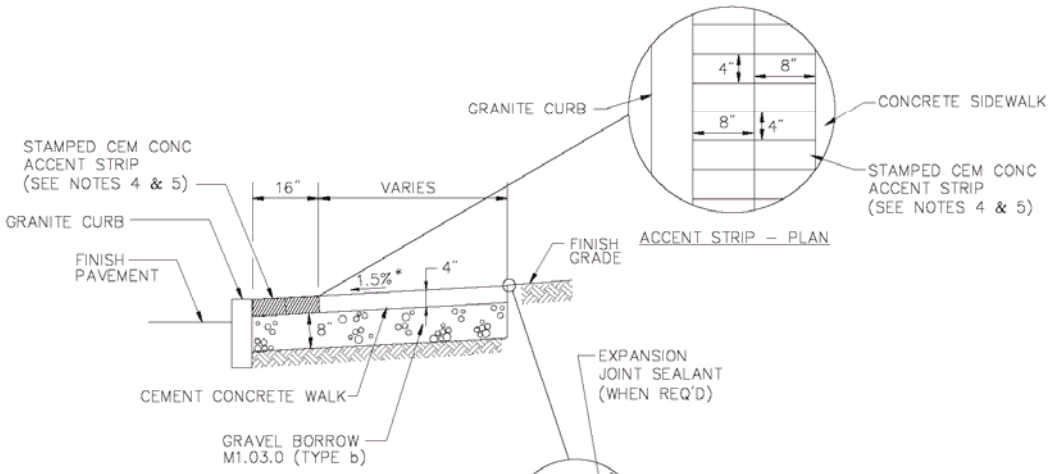

NOTES:

1. PROVIDE EXPANSION JOINTS AT MIN 30' O.C. WITH PRE-MOULDED JOINT FILLER
2. PROVIDE TOOLED DUMMY JOINTS PER DETAIL
3. PROVIDE BROOM FINISH IN DIRECTION PERPENDICULAR TO CURB
4. ACCENT STRIP SHALL BE CEM CONC COLORED THROUGHOUT STAMPED/IMPRINTED WITH A BRICK PATTERN.
5. ACCENT STRIP SHALL BE FORMED AGAINST GRANITE CURB/CURB INLET AND SHALL BE PLACED PRIOR TO CEM CONC WALK SURFACE OR SIDEWALK.

CEMENT CONCRETE SIDEWALK WITH ACCENT STRIP

SCALE: NOT TO SCALE

ITEM 446 CONCRETE DRIVEWAY REPAIR

A. *GENERAL*

Any walks or drives outside the limits of work and damaged by the Contractor shall be repaired by the Contractor and he shall not receive any compensation for this work.

The concrete drives shall be six (6) inches thick.

Expansion joints 1/2 inch thick shall be placed at all points where the sidewalk abuts buildings or other permanent structures and at 30 linear foot intervals or as directed by the Contracting Officer.

The expansion joint material shall be installed from just below the finished grade and shall extend to the sub-grade.

Joints shall be scored at intervals at the discretion of the Contracting Officer. For normal sidewalk work, these joints shall be installed at intervals equal to the width of the sidewalk but not to exceed five (5) feet.

Finished concrete surface shall be adequately protected for curing and defacement by a method approved by the Contracting Officer.

Under Item 442 & 446 any unsatisfactorily sub-base in the sidewalk area, as directed by the Contracting Officer, shall be removed and paid under Item 116 excavation. Said voids or substantial grade changes shall be filled with gravel and paid under Item 126 gravel. Said areas shall be fine graded, rolled and finished and paid under Item 402 fine grading, rolling and finishing.

Any sub-base disturbed by the Contractor without the Contracting Officer's direction shall become the Contractors responsibility to replace with approved gravel (graded and compacted).

Payment for Items 440 thru 446 shall constitute full payment for all labor and materials required to construct new concrete sidewalks or driveways, including all gravel, excavation, fine grading, compacting, and broom finish to the grade specified by the Contracting Officer or his designated representative. No additional payments for these items will be made under their individual bid item prices.

All new concrete sidewalk surfaces shall be coated with *Salt Guard*, or equivalent.

B. *MEASUREMENT AND PAYMENT*

This item will be paid for at the contact unit price per square yard. This price shall include all labor, materials, equipment, and incidental costs required to complete the work.

Under Items 446.1 and 446.2 the Contractor shall furnish and place all concrete not included in other items of this contract. The concrete will be Class A or Class B as directed by the Contracting Officer. Under the appropriately designated item of miscellaneous work the Contractor shall furnish and place all concrete reinforcement as indicated on the drawings or herein specified. Concrete reinforcements in the various sizes shall be reinforcing bars on wire mesh of the shape and size indicated on the drawings and as specified under the section titled Method of Payment.

ITEM 446.1 CLASS B CONCRETE FOR ROADWAY BASE (3,500 P.S.I., 1-1/2", 520)

ITEM 446.2 CLASS A CONCRETE (4,000 P.S.I. 1-1/2", 565)

A. *GENERAL*

Under Item 446.1 the work shall include all Class B concrete for structure support backfill, and backing on granite curb as required and not included under other items of this contract. The work to be done under this item shall conform to the pertinent provisions of Section 430 and M4, (MSSHB).

Six inches of high early strength concrete base will be placed in all defective granite blocking paving areas or to provide a concrete collar around water castings, catch basin frames and manhole frames where required by the Contracting Officer.

Under Item 446.2 the work shall include Class A concrete as required and not included under other items of this contract.

All concrete reinforcement required for Class A concrete shall be included in the unit price per cubic yard.

B. *CONCRETE REINFORCEMENT*

The steel shall be newly rolled stock, substantially free from mill scale, rust, dirt, grease, or other foreign matter. Bars shall be billet steel.

Billet steel bars shall be grade 40 conforming to the ASTM Standard Specifications for Deformed and Plan Billet Steel Bars for Concrete Reinforcement Designation A615.

Before being placed in position, reinforcement shall be thoroughly cleaned of loose mill and rust scale, dirt, and other coatings, including ice that reduces or destroys bond. Where there is delay in depositing concrete after reinforcement is in place, bars shall be re-inspected and cleaned when necessary.

Reinforcement shall be accurately positioned, as indicated on the drawings, and secured against displacement, by using annealed iron wire ties or suitable clips at intersections. Reinforcements shall be supported by concrete or metal supports, spacers, or hangers. Wood blocks, stones, brick chips, etc. shall not be used.

Reinforcements that are to be exposed for a considerable length of time after having been placed shall be painted with a heavy coat of cement grout if required.

The quantity of concrete reinforcement to be paid for shall be the number of pounds actually placed in accordance with the drawings or as directed. It shall not include waste material due either to the nature of construction or to the fact that the lengths supplied are too long or too short for their purpose. The quantity paid for shall however, include extra metal in laps where authorized due to the fact that a single bar would be unreasonably long.

Should the Contractor use shorter bars than directed, he shall provide the required lap and bear the expense of the extra steel and labor that are required.

The unit price herein agreed upon shall include all royalties.

The unit weight used in computing the tabulated in the above-mentioned ASTM Standard Specifications A615 is as follows:

STANDARD REINFORCING BARS

BAR DESIGNATION #	NOMINAL WEIGHT IN LBS. PER FOOT	BAR DESIGNATION #	NOMINAL WEIGHT IN LBS. PER FOOT
3	0.376	9	3.4
4	0.668	10	4.303
5	1.043	11	5.313
6	1.502	14	7.65
7	2.044	18	13.6
8	2.67		

Concrete and brick masonry used for manhole bases and concrete cradles and envelopes at manholes shall be included for payment under their respective items.

C. ***MEASUREMENT AND PAYMENT***

Under Item 446.2 all Class A concrete required, not included in other items of this contract, shall be measured and paid for by the cubic yard in place, in accordance with the drawings or as directed.

Under Item 446.1 all Class B concrete required for structural support, backfill and backing on granite curb, except where paid for under items of this contract, shall be measured and paid for by the cubic yard in place.

ITEM 446.3 EXCAVATABLE CONTROL DENSITY FILL (CDF)

A. ***GENERAL***

Excavatable Control density Fill (CDF) shall conform to MHD Standard Specifications for Highways and Bridges, Section M4.08.0, Type 2E.

Controlled Density Fill	Type 1 & 2	Type 1E & 2E
Compressive Strength @ 28 days	30 -150 psi	30 - 80 psi
Compressive Strength @ 90 days	200 psi	100 psi
Slump	10 " - 12"	10" - 12"

B. ***METHOD OF PAYMENT***

Excavatable Control Density Fill (CDF) shall be measured and paid for by the cubic yard in place in accordance with the project drawings or as directed by the Contracting Officer.

ITEM 447 MODULAR UNIT (BRICK) PAVER SIDEWALK

A. *GENERAL*

Under this item, the Contractor shall construct pre-cast, concrete brick paver sidewalks and driveways on reinforced concrete and bituminous concrete base course in accordance with these specifications and in reasonably close conformity with the lines and grades as shown on the City of Worcester Typical Sidewalk Detail for Brick Pavers (Modular Unit).

B. *DESCRIPTION OF WORK*

The work of this section consists of furnishing all labor, materials, equipment, supervision and performing of operations required on the drawings to install pre-cast concrete pavers as directed by the Contracting Officer as herein specified and required to properly complete the work.

Furnish all labor, materials and equipment for site preparation including reinforcing steel, equipment, submittals and services necessary for and incidental to forming, and placing unit pavers.

Provide sufficient temporary bracing and shoring of new construction to permit the safe installation and completion of all work without damage to property and without jeopardizing the safety or health of any person or persons.

Provide joint materials including joint sealant specified herein.

Provide bituminous concrete setting bed as specified.

Provide liquid asphalt adhesive as specified.

Furnish and install grout and joint sealants required for the intersecting of materials.

Types of work included in this section are:

1. Pre-cast concrete pavers. New brick applications.
2. Salvaged brick. Existing brick walks reconstructed.

C. *QUALITY ASSURANCE*

All workmanship to conform to the latest requirements of the American Concrete Institute Building Code and all local building codes and ordinances.

Maintain quality control of batching, delivery and placement of all bituminous paving and unit pavers.

Definition: Massachusetts Standard Specifications reference is abbreviation for Massachusetts Highway Department Standard Specifications for Highways and Bridges, latest edition, as applicable.

D. *MATERIALS*

Modular paver definition shall be granite, salvaged brick, concrete pavers, pre-cast concrete, or cut stone as shown on the drawings and related details.

Fine aggregate to be used in the bituminous setting bed shall be clean, hard sand with durable particles and shall be free from adherent coating, lumps of clay, alkali salts, and organic matter. It shall be uniformly graded from "coarse" to "fine" and all passing the No. 4 sieve and it shall meet the gradation requirements of test or sieve or screen analysis of fine and coarse aggregates ASTM Designation C136-81.

Dried fine aggregate shall be combined with hot asphalt cement, and the mix shall be heated to approximately 300 degrees F. at an asphalt plant. The proportion of materials shall be seven (7) percent asphalt cement and ninety-three (93) percent sand. Each ton shall be by weight ratio of 145 lbs. asphalt to 1,855 lbs. sand. The Contractor shall determine the exact proportion to produce the best possible mixture for construction of the bituminous setting bed for the details shown.

Neoprene - Modified Asphalt Adhesive to be used under all unit pavers. MASTIC (asphalt adhesive).

1. Solids (base) 75 + 1%

2. Lbs. /Gal. 8-8.5 lbs.
3. Solvent - Mineral Spirits (over 100 F. Flash)
4. Base (2% Neoprene, 10% Asbestos-free Fibers, 88% Asphalt)
5. Melting Point - ASTM D36...150 F. min.
6. Penetration - 77 F. 100 Gram Load 5 second (.1mm).
7. Ductility - ASTM D113-44 @ 25 C.

Expansion joint material shall be 1/2 inch thick pre-molded joint filler strips conforming to ASTM D1751 or ASTM D1752 or resin impregnated fiber board conforming to ASTM D1752. All joints to have top 1/4" filled with a clear exterior silicone sealant that has a minimum of a 25 year guarantee.

E. ***PRECAST CONCRETE PAVERS***

Paving Unit

1. Type: Boston Colonial Pavers
2. Nominal Dimensions: 4 inches by 8 inches
3. Thickness: 2 and three eights (2-3/8") inches
4. Weight: 27 lbs. per sq. ft.
5. Finishes: Red and brown color range

Setting Bed

1. A bed of bituminous concrete of one inch compacted by roller/compactor to
2. 3/4 inch.
3. Neoprene Asphaltic Adhesive

Paver Placement

1. Hand placed paving units with butt joints, unless otherwise shown on plans.
2. Hand tamp pavers to uniform/true level to grade.
3. Fill and sweep all joints with 3 sand 1 "Laticrete" cement mortar dry mix. Color to match pavers. Provide samples of color mortar.
4. Clean pavement surfaces.

The completed paving stone surface shall be swept clean and misted with water to provide a finished installation. Any stains that occur during construction must be removed at no cost to the City.

Any damaged paving units found prior to job acceptance shall be removed and replaced with new units of paver at no expense to the City.

F. ***POURED IN PLACE CONCRETE***

Portland Cement: Conforming to ASTM, Specifications C-150, Type 1.

Aggregates: Clean and hard, free of loam, silt or clay, conforming to ASTM Specifications C33. Course aggregates shall be size designated as No. 4 to one inch.

Concrete: Certified 3,500 pounds per square inch (28 day strength). Maximum allowable water content, 6 gallons per sack. Slump not to exceed 4 inches; Minimum cement factor, 5-1/4 sacks per yard; Ready mix concrete, conforming to ASTM Specifications C94.

Water: Potable

Air-Entraining Agents: Conforming to ASTM C260, containing 4 to 6 percent entrained air.

Welded Steel Wire Fabric: 6" x 6" WWM conforming to ASTM A185.

Pre-molded Joint filler: Non-extruding and resilient bituminous type, conforming to ASTM D1752-67, Type 2, 1/2 inch in thickness.

Sand: Clean, hard, durable grains, free from foreign substance, uniformly graded with coarse particles predominating.

Forms: Clean, strong enough to resist pressure to concrete without springing, tight enough to prevent leakage, steel or wood forms acceptable.

Impervious Liquid Membrane Curing Material: Conforming to AASHTO = M148, Type 1 or 2.

G. *GRANITE BAND PAVING (CITY SUPPLIED WHERE REQUIRED)*

CS Material provided shall be granite of color and finish indicated complying with National Building Granite Quarries Association (NBGQA).

1. Type: Pink Granite (CS Material)
2. Type : Grey Granite (CS Material)
3. Nominal Dimensions: 12" x 12", 12" x 24" and 24" x 24"
4. Thickness: 1-1/4"
5. Finishes: Face shall be thermal sides and bottom shall be sawn.

Mortar Mix: Comply with ASTM C270 Proportion Specifications, except limit materials to those specified herein, and limit cement/lime ration to 1/4 part lime per part Portland Cement. Mortar to have latex adhesive added to the manufacturers recommendations.

1. Apply laticrete bonding agent or approved equal to all granite paving unit being installed on concrete.
2. All granite paving units have 1/16 - 1/8 inch laticrete mortar joint. Color of mortar to match granite pavers being installed. All surface joints are to be flush.

The completed paving stone surface shall be swept clean and misted down with water to provide a finished installation. Any stains that occur during construction must be removed at no cost to the City.

Any damaged paving units found prior to job acceptance shall be removed and replaced with new units of pavers at no expense to the City.

H. *GENERAL PAVING BASES*

Sub-bases: Prepared as specified under Earthwork Section to the depths below finished grade indicated.

Base Courses: Six (6) inches of concrete poured in place per City of Worcester standard detail.

Bituminous Concrete Paving Leveling Course for Pre-cast Concrete Pavers:

1. Install bituminous concrete paving in one course; One (1") inch asphaltic mix finish course with total compressed thickness of 3/4 inch; Install bed as indicated on drawings and specifications.

I. *PRE-CAST CONCRETE PAVERS*

Paving subcontractor shall review site conditions and base pavement surface prior to commencing paving. A written approval of the base shall be supplied by the subcontractor to the Contracting Officer.

Install the bituminous concrete setting bed.

1. Install bituminous concrete paving in one course. One (1") inch asphaltic finish course with total compressed thickness of 3/4 inch. Install bed as indicated on drawings.
2. Transport to site, apply, spread and roll bituminous concrete conforming to Section 460, (MSSHB), as applicable.

Apply uniformly a neoprene modified asphaltic adhesive on top of compacted bituminous setting bed to a depth of no more than 1/16 inch.

Paving stones shall be plumb, level and true to line and grade. Starting at 90 degrees to the granite bands parallel to the street curb, set pavers in hand tight uniform joints in different patterns. The Contracting Officer shall direct the Contractor as to what pattern will be used where. In figuring the amount of material required to complete the work, use the designated pattern throughout those areas designed to receive pre-cast concrete pavers. Strings shall be used to hold pattern lines.

Full units shall be laid first and cut units subsequently. Cut pavers with a splitter designed for pavers or a masonry saw to ensure all cuts fit neatly and accurately without damaged edges. No slivers or cut units smaller than 3" wide and 7" long, except when starting. See detail.

Blend color variations.

After a substantial area of pavers has been placed.

1. Laticrete sand mix shall be spread and broomed over the installed paving stones and into any joints until flush to top of the paving stone. Remove excess from the paving surface. Spray paving with mist of water so concrete will set in joints.
2. All pavers installed that day shall be compacted in place by day's end.

J. *CEMENT CONCRETE PAVING*

Set forms to provide for depths as indicated, for concrete, firmly stake all forms in place, set tops to exact finish grade. Set forms for edging as indicated, oil forms with non-staining oil as required.

Install expansion joints, cut back 1/4 inch below finish grade of concrete. Install expansion joints where shown and around utility structures, buildings, steps, platforms and other structures in concrete paving. Install woven wire mesh lapped 6 inches.

Moisten gravel base course.

Pour concrete in alternate sections between expansion joints. Spade concrete thoroughly along forms and expansion joints. Tamp and screen to a dense mix.

Provide a street broom finish to concrete surfaces. Finishing to be done after surface has been troweled to a smooth even surface and sufficient mortar has been brought to the surface. Provide a hand rubbed finish for edging. All edging and scoring is to be done after the broom finishing has been completed.

Remove forms while concrete is still "green."

Cure concrete surfaces by covering with burlap, or other suitable material approved by the Contracting Officer. Keep moist for 72 hours minimum after which covering shall be removed.

Apply liquid membrane curing material in strict conformance with manufacturer's directions.

Protect by not allowing use for a minimum of 5 days after installation.

Place no concrete when 40 degrees F or below, or when expected to drop to 40 degrees F within 24 hours after placing concrete. Maintain mix at a minimum of 50 degrees F.

K. *GRANITE AND PAVING*

Clean concrete slab thoroughly of dust, dirt and foreign matter.

Set granite in full latex mortar setting bed true to line and grade. Remove excess mortar promptly as work progresses; Lay with 1/16 inch mortar joints between stones unless otherwise indicated; Level surface to elevations shown, with no deviation greater than 1/16 inch to 10 feet; Strike joints flush with top surface of abutting surface and tool slightly concave.

Set granite in pattern as indicated. Set so no unit will be cut less than 10 inches, unless approved.

Cure granite paving work by covering with 2 layers of burlap and keep damp for 2 days.

L. *CLEAN UP*

The Contractor shall be responsible for a total clean up of paving on a daily basis. The Contracting Officer shall insist on the site being clean at the end of each work day.

During setting and curing, protect installed unit paver areas from heavy traffic by using planks or plywood panels for walkways and wheelways.

M. *MEASUREMENT AND PAYMENT*

Payment for Item 447 shall constitute full payment for all labor and materials required to construct new Modular Unit (Brick) Paver Sidewalks or Driveways, including all gravel, excavation, reinforced concrete and bituminous concrete base courses, fine grading, compacting and the salvage of any brick to be used when reconstructing

existing brick sidewalks or driveways to the grade specified by the Contracting Officer or his representative. Payment shall be at the price per square yard bid in the proposal.

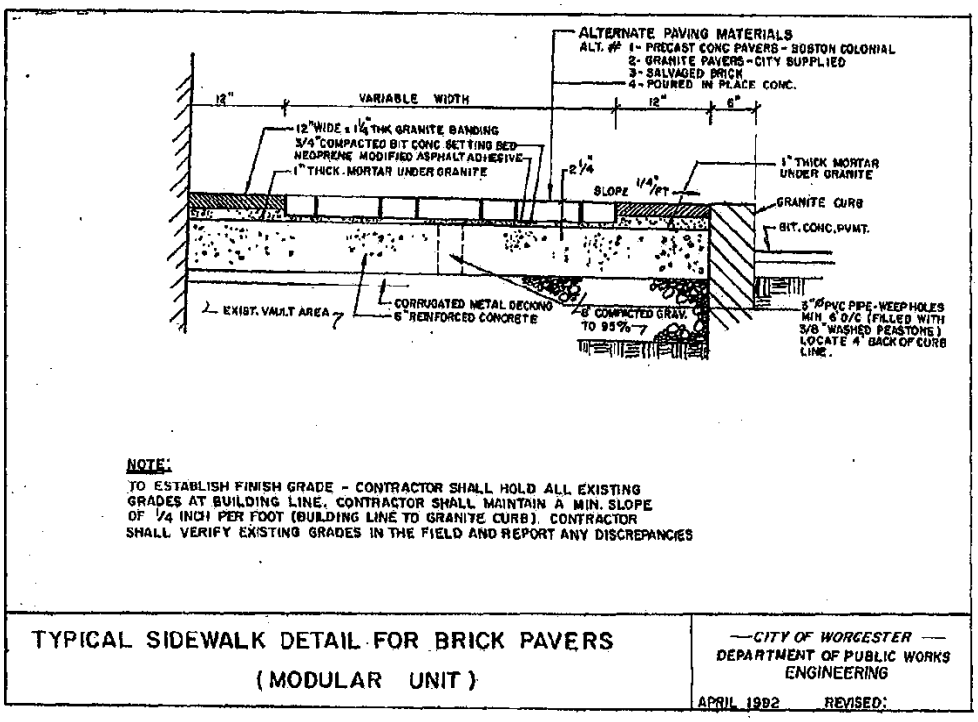

NOTE:
TO ESTABLISH FINISH GRADE - CONTRACTOR SHALL HOLD ALL EXISTING GRADES AT BUILDING LINE. CONTRACTOR SHALL MAINTAIN A MIN. SLOPE OF 1/4 INCH PER FOOT (BUILDING LINE TO GRANITE CURB). CONTRACTOR SHALL VERIFY EXISTING GRADES IN THE FIELD AND REPORT ANY DISCREPANCIES

TYPICAL SIDEWALK DETAIL FOR BRICK PAVERS (MODULAR UNIT)	—CITY OF WORCESTER— DEPARTMENT OF PUBLIC WORKS ENGINEERING APRIL 1992 REVISED:

ITEM 447.01 NEW BRICK SIDEWALKS AND DRIVEWAYS WITH GRAVEL BASE

A. *GENERAL*

Under this item the Contractor shall remove the existing asphalt or concrete sidewalk and/or driveways and replace with pre-cast concrete pavers as noted on the plans in accordance with these specifications and in reasonably close conformity to the lines and grades as shown on the plans or as established by the Contracting Officer.

B. *MATERIALS: PRECAST CONCRETE PAVER*

Paving Unit

Type: Boston Colonial pavers

Nominal Dimensions: 4" x 8"

Thickness: 2-3/8"

Weight: 27 lbs. per sq. ft.

Finishes: Red and brown color range

C. *GRAVEL BORROW*

The work to be done under this item shall conform to the applicable provisions of Section 401, (MSSHB).

D. *SAND BASE*

The work to be done under this item shall conform to the applicable provision of Section M4.02.02, (MSSHB).

E. *EXCAVATION*

Excavation shall be made to the required depth of 12 inches including the removal of the existing asphalt or concrete sidewalks and/or driveways.

F. *SUBGRADE*

The sub-grade of the sidewalks shall be shaped parallel to the proposed surface of the walks and shall be thoroughly compacted.

G. *FOUNDATION*

After the sub-grade has been prepared, a foundation of crushed gravel base course material shall be placed upon it. After being thoroughly compacted, the foundation shall have a thickness of 8 inches as shown on the plans or as established by the Contracting Officer.

H. *SAND BASE*

A layer of sand base course material 2 inches in thickness shall be spread upon the properly prepared foundation. This course shall be thoroughly compacted and present a hard smooth surface parallel to the proposed finish slope and grade of the walk.

I. *BRICK PLACEMENT*

After the sand base course has been properly prepared, the brick shall be placed in the pattern shown on said plans, or as directed by the Contracting Officer. The brick shall be placed as closely together as possible and the sand joints between the brick shall be no wider than that allowed by the natural texture of the brick itself. No open joints will be allowed.

J. *MEASUREMENT AND PAYMENT*

Payment for the construction of the brick sidewalks and driveways shall be made at the contract unit price bid per square yard for sidewalks and driveways. The price shall include the cost of the pre-cast brick paver and installation, excavation, gravel base, fine grading, compacting, sand base, and all labor and equipment necessary to satisfactorily complete the work.

ITEM 447.02 EXISTING BRICK SIDEWALKS AND DRIVEWAYS WITH GRAVEL BASE – REMOVE & RESET

A. *GENERAL*

Under this item the Contractor shall remove and reset brick walks and driveways as noted on the plans in accordance with these specifications and in reasonably close conformity to the lines and grades as shown on the plans or as established by the Contracting Officer.

B. ***GRAVEL BORROW***

The work to be done under this item shall conform to the applicable provisions of Section 401, (MSSHB).

C. ***SAND BASE***

The work to be done under this item shall conform to the applicable provisions of Section M4.02.02, (MSSHB).

D. ***EXCAVATION***

Excavation shall be made to the required depth of 12 inches including the removal of the existing brick sidewalks.

E. ***SUBGRADE***

The sub-grade of the sidewalks shall be shaped parallel to the proposed surface of the walks and shall be thoroughly compacted.

F. ***FOUNDATION***

After the sub-grade has been prepared, a foundation of crushed gravel base course material shall be placed upon it. After being thoroughly compacted, the foundation shall have a thickness of 8 inches as shown on the plans or as established by the Contracting Officer.

G. ***SAND BASE***

A layer of sand base course material 2 inches in thickness shall be spread upon the properly prepared foundation. This course shall be thoroughly compacted and present a hard smooth surface parallel to the proposed finish slope and grade of the walk.

H. ***BRICK PLACEMENT***

After the sand base course has been properly prepared, the brick shall be placed in the pattern shown on said plans, or as directed by the Contracting Officer. The brick shall be placed as closely together as possible and the sand joints between the brick shall be no wider than that allowed by the natural texture of the brick itself. No open joints will be allowed.

I. ***MEASUREMENT AND PAYMENT***

Payment for the construction of the brick sidewalks and driveways shall be made at the contract unit price bid per square yard for sidewalks and driveways. The price shall include the cost of the pre-cast brick paver and installation, excavation, gravel base, fine grading, compacting, sand base, and all labor and equipment necessary to satisfactorily complete the work.

TYPICAL (NEW & EXISTING) BRICK DRIVEWAY DETAIL SECTION

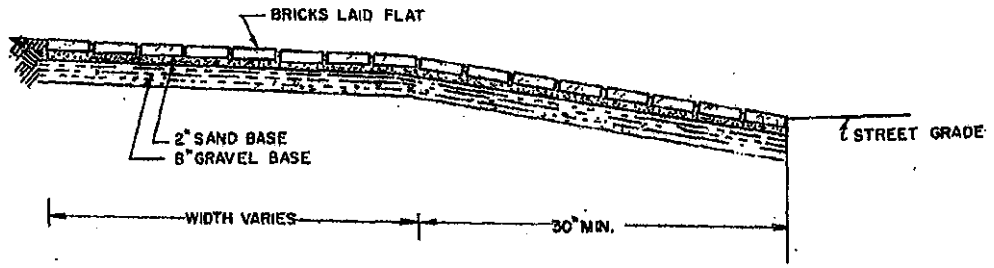

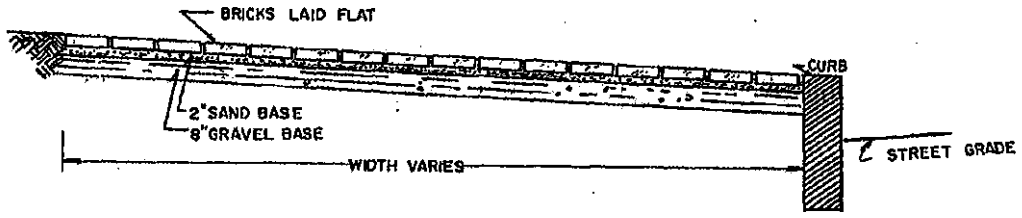

TYPICAL (NEW & EXISTING) BRICK SIDEWALK DETAIL SECTION

TYPICAL DRIVEWAY/SIDEWALK FOR NEW & EXISTING BRICK	CITY OF WORCESTER, MA. DEPT. OF PUBLIC WORKS ENGR. DEC 1992

ITEM 447.03 MODULAR UNIT REMOVE AND REPLACE

A. *STREETSCAPE STANDARD*

Work under this item shall be to remove and replace existing modular unit materials. This work shall conform to the applicable provisions of Item 447.

B. *MEASUREMENT AND PAYMENT*

Payment shall be at the price per square yard bid in the proposal.

ITEM 448 WORCESTER HIGHWAY MONUMENT

A. *GENERAL*

The work to be done under this item shall conform to the applicable provisions of Section 710, (MSSHB).

Worcester standard highway monuments shall be as manufactured by H.E. Fletcher Company, West Chelmsford MA or an approved equal.

The monument shall be set complete in place and shall conform to the specifications as shown on plans titles "Worcester Standard Highway Monument" included in this contract.

B. *MEASUREMENT AND PAYMENT*

The method of payment for this item is per each complete in place.

ITEM 450 BOUNDS, REMOVE & RESET

A. *GENERAL*

The work to be done under this item shall conform to the applicable provisions of Section 710, (MSSHB). The Contractor shall notify the Department of Public Works and Parks to have the existing bounds tied in prior to being removed and reset.

B. *MEASUREMENT AND PAYMENT*

The method of payment for this item is per each complete in place.

ITEM 451 TEMPORARY PEDESTRIAN BRIDGE

A. *GENERAL*

The work under this item shall include fabricating, installing, removing and resetting temporary pedestrian bridges to maintain acess to abutting properties and businesses during sidewalk construction.

B. *CONSTRUCTION*

During sidewalk construction it may be necessary for the contractor to provide a temporary pedestrian bridge across areas of excavated or newly poured sidewalk in order to maintain access to businesses and other properties. The Contractor shall be responsible to provide a safe and sturdy means of passage by pedestrians. The temporary pedestrian bridge shall be a minimum of 36” wide with a handrail on one side. The Contractor shall submit shop drawings of the temporary bridge for approval by the engineer.

C. *MEASUREMENT AND PAYMENT*

The method of payment for this item is per each complete in place. This price shall include all labor, materials, equipment and incidental costs required to complete the work. A maximum of three (3) temporary pedestrian bridges shall be constructed to maintain pedestrian access to busisnesses in construction areas. Any additional sidewalk bridges shall be fabricated only with the approval of the contract officer. The contractor will not be compensated for any temporary bridges fabricated without prior approval of the contract officer. The contractor shall not be paid to remove and reset the temporary pedestrian bridge to new locations throughout the duration of the project. The removal and resetting for reuse shall be considered incidental to the construction.

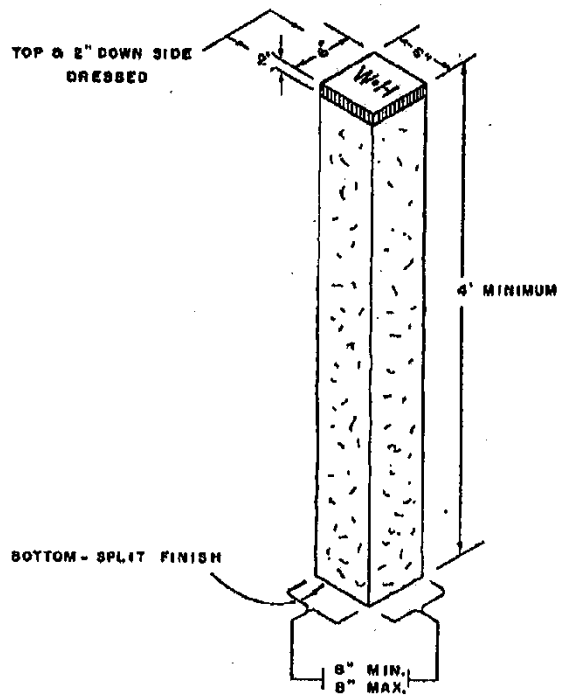

SCALE 1/2" = 6"

WORCESTER STANDARD HIGHWAY - MONUMENT	CITY OF WORCESTER DEPARTMENT OF PUBLIC WORKS ENGINEERING MARCH 1987 REVISED

SPECIFICATIONS

MATERIAL ....GRANITE
MINIMUM SECTION- .....6 INCHES SQUARE
MAXIMUM SECTION.....8 INCHES SQUARE
MINIMUM LENGTH.....4 FEET
DRESSED AT TOP.....6" SQUARE & 2" DOWN
BOTTOM FINISH.....SPLIT
HOLE DRILLED, & WH INSCRIBED ON TOP FACE...*

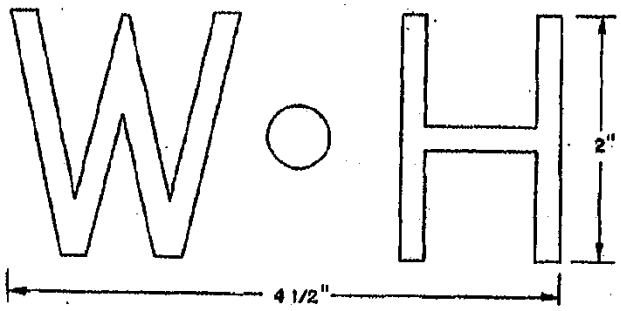

* DETAIL FOR DRILL HOLE AND LETTERING

NOTE

USE "V" CUT AT LEAST 1/4" DEPTH
DRILL HOLE AT LEAST 1/2" DEEP AND 1/2" DIAMETER

FULL SCALE

MARCH 1976

WORCESTER STANDARD HIGHWAY — MONUMENT	CITY OF WORCESTER DEPARTMENT OF PUBLIC WORKS ENGINEERING MARCH 1987 REVISED

Work to be done under Items 452 thru 454 shall consist of building wheelchair ramps and installing detectable warning panels at street intersections where specified or directed by the Contracting Officer. Wheelchair ramps shall conform to plan entitled Handicap Ramp.

ITEM 452 WHEELCHAIR RAMP BIT. CONCRETE - 2" THICK WITH DETECTABLE WARNING PANELS

ITEM 452.1 INSTALLATION OF DETECTABLE WARNING PANEL ON EXISTING BITUMINOUS CONCRETE RAMP COMPLETE IN PLACE

ITEM 453 REPLACING BITUMINOUS CONCRETE WHEELCHAIR RAMP W/ CEMENT CONCRETE WHEELCHAIR RAMP- 6" THICK WITH DETECTABLE WARNING PANELS

ITEM 454 WHEELCHAIR RAMP CEMENT CONCRETE - 6" THICK WITH DETECTABLE WARNING PANELS

ITEM 454.1 INSTALLATION OF DETECTABLE WARNING PANEL ON EXISTING CEMENT CONCRETE RAMP COMPLETE IN PLACE

A. ***GENERAL***

The design will be dependent upon the width and type of existing sidewalk, conforming to 521 CMR, Architectural Access Board as shown in the City of Worcester Construction Details Book.

On sidewalks having curb, the curb will be reset for the whole length of the ramp. Any increase in thickness designated by the Contracting Officer shall be paid for at a pro-rated basis.

Expansion joints 1/2 inch thick shall be placed at all points where the concrete wheelchair ramp abuts sidewalks, buildings, curb or other permanent structures.

Whenever sidewalks, walkways, or curbs on streets and ways are constructed, or repaired, curb cuts are required. All curb cuts shall comply with the following:

B. ***LOCATION***

Curb cuts shall occur wherever an accessible route crosses a curb and at the following locations:

Curb cuts are required at each corner of each intersection, located within the crosswalk and/or the pedestrian path of travel. Curb cuts shall be perpendicular to the curb at street crossings and each shall have a level landing at the top. At marked crossings, the bottom of the ramp run, exclusive of flared sides, shall be wholly contained with the marked crossing. Single (i.e. diagonal or depressed corner) curb cuts serving two street crossing directions are not allowed.

Exception: Where pedestrian right-of-way established width will not accommodate a perpendicular curb cut and landing, a parallel public sidewalk curb cut with a level landing at its bottom shall be provided instead of a perpendicular curb cut.

Reciprocal curb cuts: When curb cuts or sidewalks are being constructed or reconstructed on one side of the street, and when such curb cuts or sidewalks are connected to an opposite side of the street by one or more pedestrian paths of travel, then at least one curb cut shall be provided on the opposite side of the street where such side is controlled by the same owner.

Driveways: Curb cuts are required at driveways intersecting sidewalks when the driveway has side curbs.

Raised Islands: Any raised islands in crossings shall be cut through level with the street or have curb cuts at both sides and a level area at least 48 inches (48"=1219mm) long between the curb cuts in the part of the island intersected by the crossings.

Obstruction: Curb cuts shall be located or protected to prevent their obstruction by parked vehicles.

C. ***SLOPE***

The maximum slope shall be one-in-12 (1:12) (8.3%). Where sidewalks are too narrow to install a straight-line curb cut at a slope of one-in-12 (1:12) (8.3%), the primary slope may be steeper than 1:12 (8.3%) but the sides of the curb cut shall not exceed one-in-12 (1:12) (8.3%). The maximum cross-slope for any curb cut shall be 1:50 (2%). (There is no tolerance allowed on slope requirements).

D. ***TRANSITIONS***

Transitions from curb cuts to walks, gutters, or streets shall be flush with existing surfaces. Maximum slopes of adjoining gutters, road surface immediately adjacent to the curb cuts, or accessible route shall not exceed one-in-20 (1:20) (5%).

E. ***DRAINAGE***

Grading and drainage shall be designed to minimize pooling of water, accumulation of ice, or flow of water across the base of the curb cut.

F. ***WIDTH***

The minimum width of a curb cut shall be 36 inches (36"=914mm), exclusive of flared side.

Landing width: Where a perpendicular curb cut is provided, a landing width of the curb cut shall be provided at the top of the curb cut. The landing shall be 48 inches (48"=1219mm) in length. The slope of said landing shall not exceed one-in-50 (1:50) (2%) in any direction.

G. ***FLARED SIDES***

Sides of curb cuts shall extend at least 5 feet at the curb. The maximum slope of the flare is one-in-ten (1:10) (10%). Curbing at the flared sides must blend with the slope of the flared sides.

H. ***RETURNED SIDES***

Curb cuts with returned sides are only permitted where they are protected by handrails pursuant to 521 CMR 24.5, Handrails or where pedestrian travel across the ramp is obstructed by permanently installed street hardware or landscaping.

I. ***BUILT-UP CURB CUTS***

Built-up curb cuts are allowed only where they do not project into vehicular traffic lanes.

J. ***PEDESTRIAN STREET CROSSINGS***

Where provided, pedestrian street crossings at, above, or below grade shall comply with the following:

Crossing controls shall be raised from or flush with their housings and shall be a minimum of two inches (2"=51mm) in the smallest dimension. The force required to activate controls shall be no greater than 5 ft.-lb. (22.2N).

Location: Controls shall be located as close as practicable to the curb cut serving the controlled crossing and shall permit operation from a clear ground space.

Mounting height: Pedestrian-actuated crossing controls shall be a maximum of 42 inches (42"=1067mm) above the finished sidewalk.

Clear ground space: A stable and firm area, complying with 521 CMR 6.5, Forward Reach, or 521 CMR 6.6, Side Reach shall be provided at the controls. Where a parallel approach is provided, controls shall be within ten inches (10"=254mm) horizontally of and centered on the clear ground space. Where a forward approach is provided, controls shall abut and be centered on the clear ground space.

K. ***MEASUREMENT AND PAYMENT***

Wheelchair ramps shall be measured in place, including excavation, gravel foundation, grading, removing and resetting curb or berm, installing detectable warning panels and removal and replacing of disturbed roadway. Payment shall be at the price per square yard bid in the proposal.

Existing wheelchair ramps that need detectable warning panels shall be measured in place, including all necessary equipment needed for the installation. Payment shall be at the bid price per square foot in the proposal.

Where granite curb is missing the Contractor will be required to set granite curb. Payment for supply of such granite curb shall be through the appropriate Items 405 thru 420.

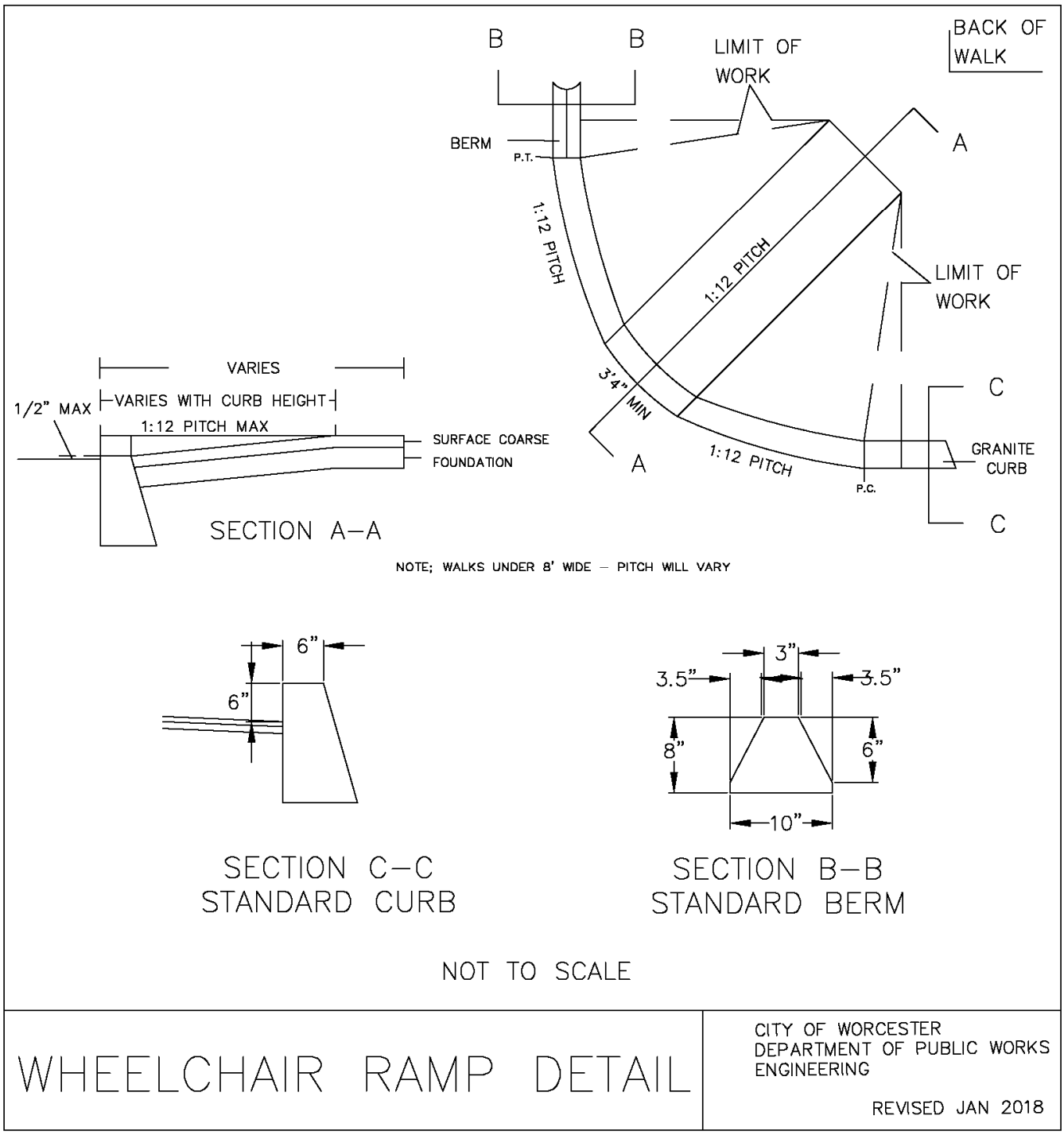
B
B
LIMIT OF WORK
BACK OF WALK
BERM
P.T.
A
1:12 PITCH
1:12 PITCH
LIMIT OF WORK
3'4" MIN
C
A
1:12 PITCH
P.C.
GRANITE CURB
C
VARIES
1/2" MAX
VARIES WITH CURB HEIGHT
1:12 PITCH MAX
SURFACE COARSE
FOUNDATION
SECTION A–A
NOTE; WALKS UNDER 8' WIDE – PITCH WILL VARY
6"
6"
SECTION C–C
STANDARD CURB
3"
3.5"
3.5"
8"
6"
10"
SECTION B–B
STANDARD BERM
NOT TO SCALE
WHEELCHAIR RAMP DETAIL
CITY OF WORCESTER
DEPARTMENT OF PUBLIC WORKS
ENGINEERING
REVISED JAN 2018

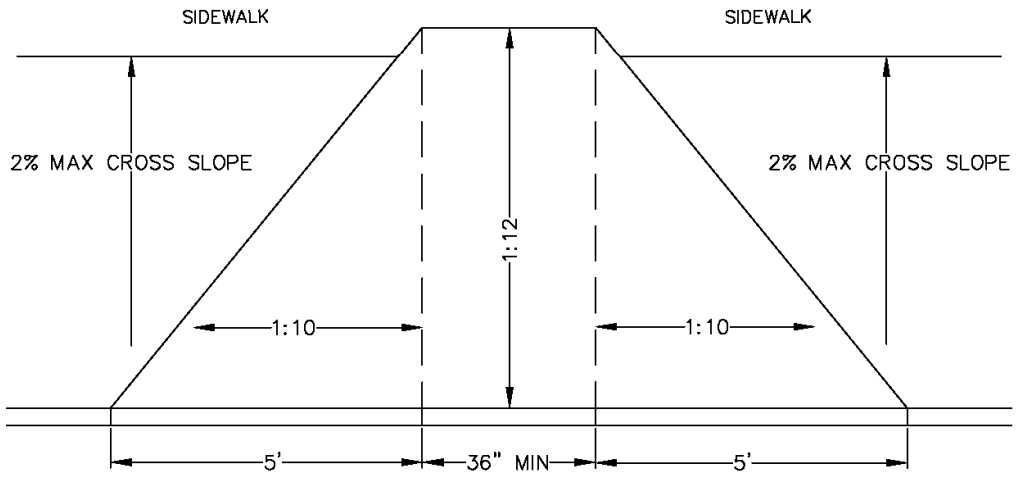

CURB CUT WITH FLARED SIDES

ELEVATION @ CURB LINE

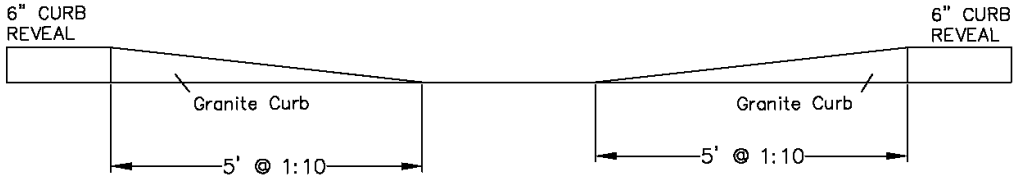

HANDICAP RAMP DETAIL

CITY OF WORCESTER
DEPARTMENT OF PUBLIC WORKS
ENGINEERING

REVISED JAN 2018

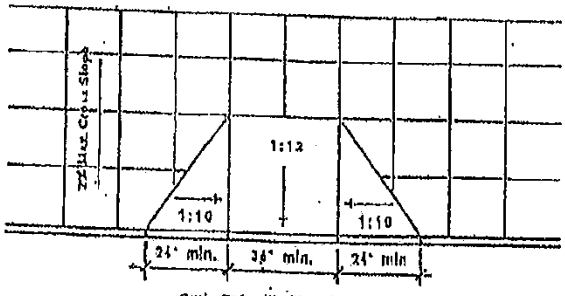

Curb Cut with Flared Sides

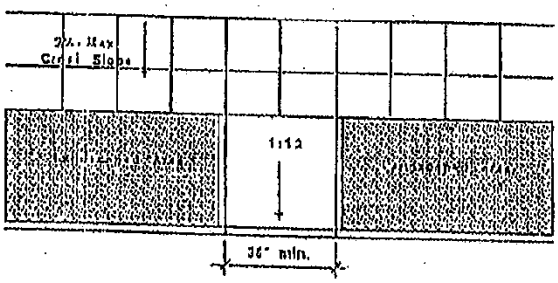

Curb Cut With Returned Sides

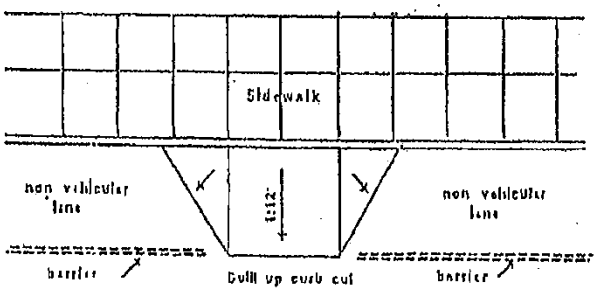

Built up curb cut

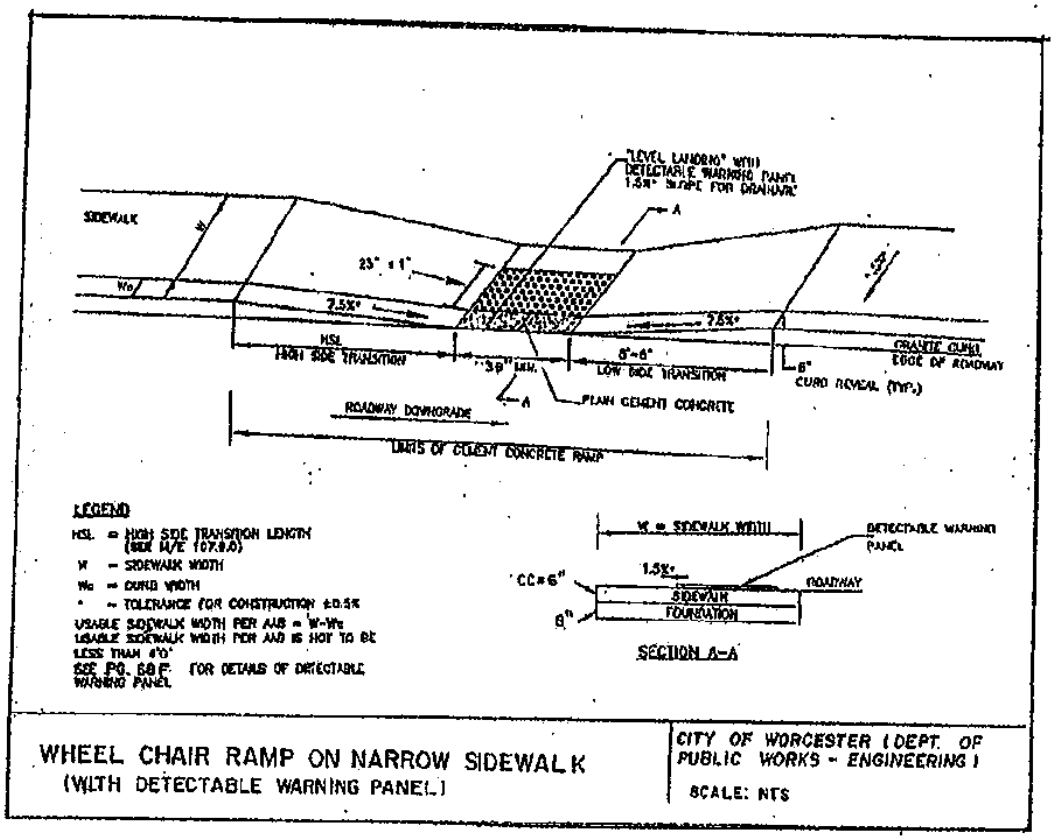

WHEEL CHAIR RAMP ON NARROW SIDEWALK
(WITH DETECTABLE WARNING PANEL)

CITY OF WORCESTER (DEPT. OF PUBLIC WORKS - ENGINEERING)

SCALE: NTS

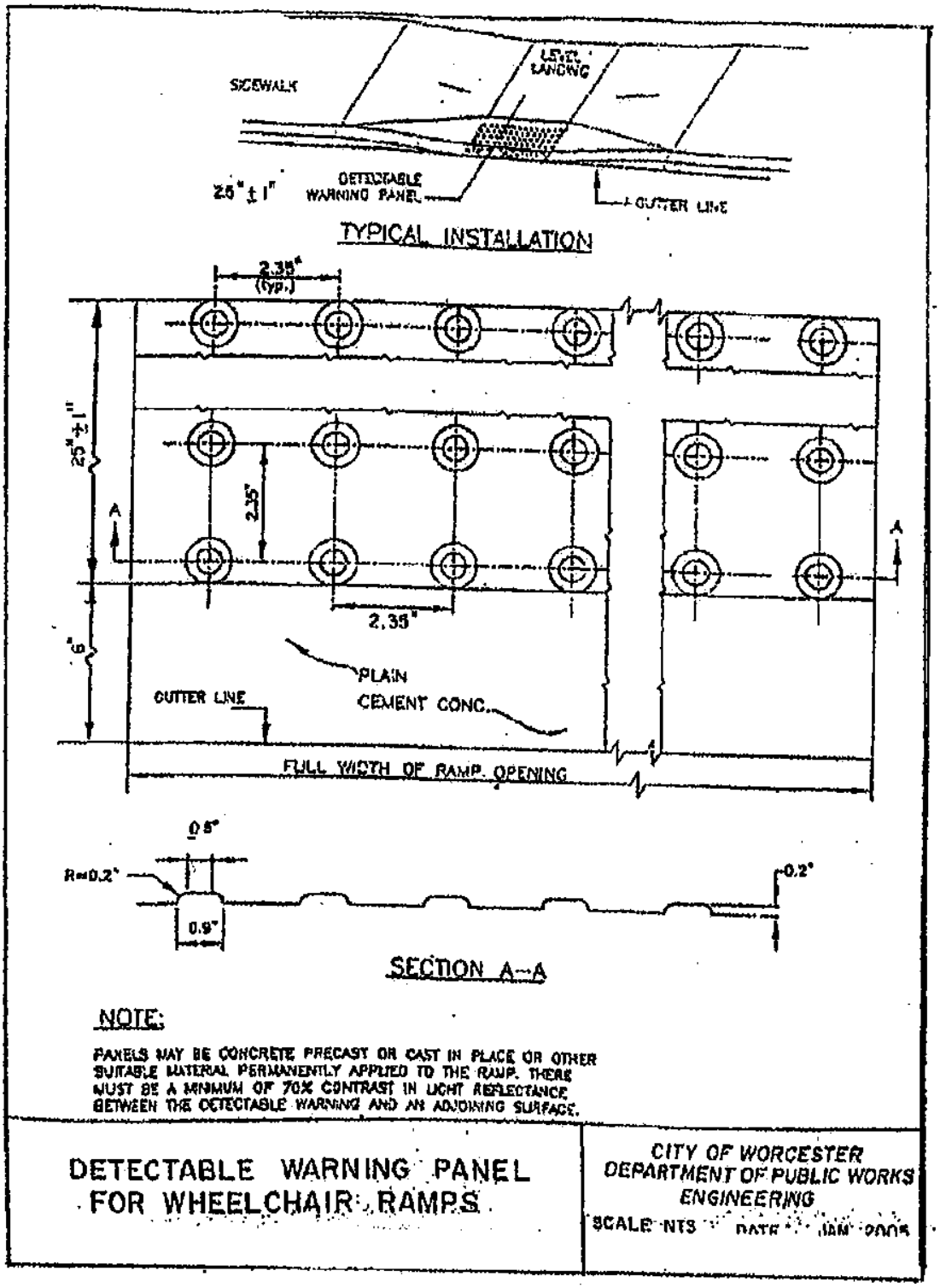
SIDEWALK
LEVEL LANDING
25" ± 1"
DETECTABLE WARNING PANEL
GUTTER LINE
TYPICAL INSTALLATION
2.35" (typ.)
25" ± 1"
2.35"
A
A
2.35"
6"
PLAIN CEMENT CONC.
GUTTER LINE
FULL WIDTH OF RAMP OPENING
0.5"
R=0.2"
0.2"
0.9"
SECTION A–A
NOTE:
PANELS MAY BE CONCRETE PRECAST OR CAST IN PLACE OR OTHER SUITABLE MATERIAL PERMANENTLY APPLIED TO THE RAMP. THERE MUST BE A MINIMUM OF 70% CONTRAST IN LIGHT REFLECTANCE BETWEEN THE DETECTABLE WARNING AND AN ADJOINING SURFACE.
DETECTABLE WARNING PANEL FOR WHEELCHAIR RAMPS
CITY OF WORCESTER
DEPARTMENT OF PUBLIC WORKS
ENGINEERING
SCALE NTS

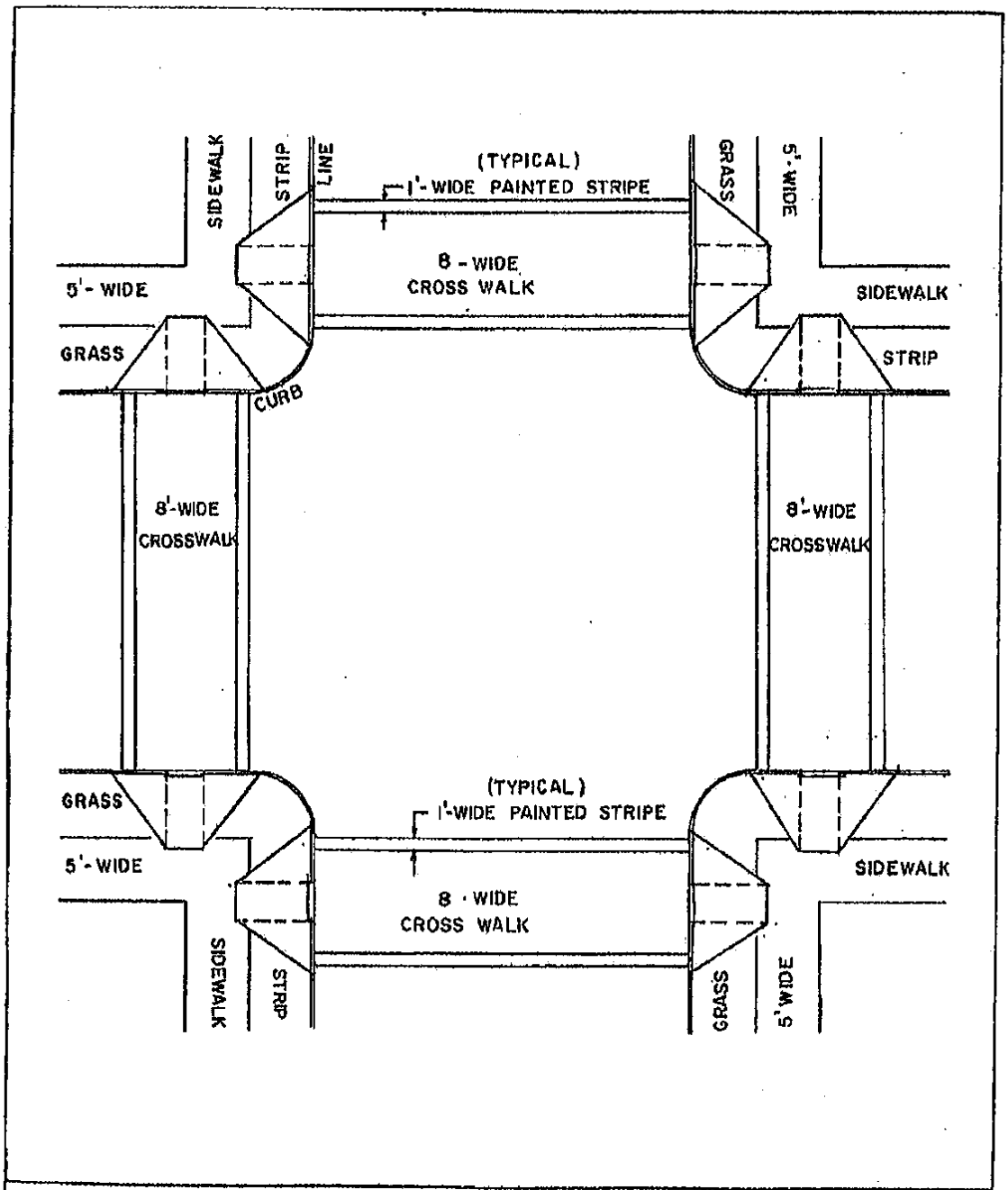

HANDICAP RAMP LOCATION

CITY OF WORCESTER
DEPARTMENT OF PUBLIC WORKS
ENGINEERING

REVISED JAN 1997

ITEM 455 TEXTURIZED SYNTHETIC PAVEMENT SQUARE YARD

A. *GENERAL*

The work under this item shall consist of preparing pavement surface and installation of six foot wide Texturized Synthetic Pavement at all proposed crosswalk locations in accordance with the following:

PREPARATION OF ASPHALT SURFACE

The section of pavement to be replaced shall be sawcut in neat lines six feet apart in the direction of the proposed crosswalk. The final surface pavement shall then be milled to an approximate depth of 0.75 inches. The Contractor shall immediately remove all residual material resulting from this work. All excavated material shall be disposed of by the Contractor offsite.

INSTALLATION OF TEXTURIZED SYNTHETIC PAVEMENT

The Contractor shall be responsible for the preparation, placement and patterning of Texturized Synthetic Pavement. This synthetic paving material shall be composed of a hot-applied, resin-based compound formulated with a color stable pigment throughout that can be surface textured to simulate a brick pattern. Said pattern shall be oriented such that the continuous lines of the brick pattern shall be perpendicular to the parallel edges of the proposed crosswalk. The Contractor will be required to overlay in previously prepared recessed pavement surfaces as described above, and as required and approved by the Engineer.

The Contractor must be a manufacturer authorized applicator, experienced with this specialized system, satisfactory to the Engineer. Contractor shall furnish shop drawings, from manufacturer, to confirm design intent. A manufacturer representative shall be present at all times during the placement and curing of the textured synthetic pavement materials.

Using manufacturer prescribed methods and equipment, the Contractor shall adequately heat and uniformly mix the synthetic material(s) together. The contractor shall provide samples of all applicable colors, from the available pigments supplied by the manufacturer, to the Engineer/City of Worcester for approval prior to installation. The color shall be a brick red and shall match the approved color of the Stamped Cement Concrete Accent Strip. Maximum heating temperature of the completed formulation is 440 degrees Fahrenheit.

The Contractor shall then apply the heated, mixed synthetic material to the surface of the hardened, structurally sound, asphalt pavement. The synthetic material shall be spread and leveled to the desired build thickness of 0.75 inches, using manufacturer's specialized ironing tools, heated sufficiently to smooth the surface to a state of readiness for texturing. No material shall be applied when precipitation is present. No underlayment of any type shall be placed between the prepared surface to receive the overlay and Texturized Synthetic Pavement Material. The Texturized Synthetic Pavement shall be applied directly to the prepared surface to ensure a good bond.

The color and surface pattern shall be a red colored brick pattern. A 3 foot by 3 foot cured "mock up" shall be constructed for review and approval by the Engineer in consultation with the City of Worcester.

Texturing will begin immediately after leveling has occurred, while the material is still hot enough to allow the mold selected, to adequately penetrate the surface and create the desired pattern or form.

Once the finished surface has cooled completely and has hardened to the manufacturer's specification to support vehicular and pedestrian traffic, the application area may be opened to vehicular and/or pedestrian traffic.

Any residual material resulting from this work shall be removed and disposed of in a proper manner offsite. The completed work area shall be left in a neat and clean condition, satisfactory to the Engineer.

The products used in this surfacing system shall meet the material specifications outlined below and conform to the minimum following physical and performance properties: hot-applied resin-based compound developed specifically for use on asphalt or cement concrete, with superior adhesion, flexibility and abrasion resistance characteristics, as well as color stability, chemical resistance and scrub ability.

The Contractor, during the operation of work, to save from harm and injury, any structure, public or private, situated above or below the surface and lying within the scope of the project. If during the execution of the work, the Contractor, through willfulness or carelessness, permits or causes any damage, the cost of satisfactory repair or replacement shall be the financial responsibility of the Contractor.

SYNTHETIC PAVEMENT MATERIAL:

The material to be utilized in the Texturized Synthetic Pavement shall conform to the following physical properties:

Average Temp. Range:	-5 - 110 degrees F
Wheel Tracking @ 113 F:	less than 1 mm/ hr.
Wheel Tracking @ 140 F:	N/A
Density:	2.12
Cone Flow Test (5 hours @ 194 F):	15% maximum
Plane Test (5 hours @ 194 F):	5% maximum
Indent @ 194 F:	25 dmm maximum
Indent @ 122 F:	N/A
Ash Content:	90% maximum
Skid Resistance Value (ASTM E303):	82.6 BPN
Flash Point (ASTM D92-05a):	540 degrees F
Impact Resistance (ASTM D256-06):	13.39 in. lbs.
Durometer Hardness (ASTM D2240-05):	60.00
Specific Gravity/Density (ASTM D790-03):	2.15
Softening Point (ASTM D36-00):	295 degrees F
Water Absorption (ASTM D570-05):	<0.001%

EQUIPMENT REQUIRED:

Contractor shall possess and be familiar with the specialized machinery necessary to perform the procedures as outlined and contained within this technical specification package, including, but not limited to, appropriate trucks, compressors, miscellaneous asphalt equipment, dispensers, applicators, cutters and/or specialized tools etc.

ITEM 456 CONCRETE STEP (COMPLETE IN PLACE)

A. *GENERAL*

Work to be done under this item shall consist of removal, excavation, gravel base, wood forms, placing and finishing of cement concrete for new steps to conform to the proportion of existing steps.

When new steps are to be built they shall conform to the design on plan titled Typical Design for Cement Concrete Steps.

Class C (3,000 p.s.i., 1-1/2", 470) concrete shall be used.

B. *MEASUREMENT AND PAYMENT*

Concrete steps shall be measured in place and paid for at the unit price bid for each contained in the proposal.

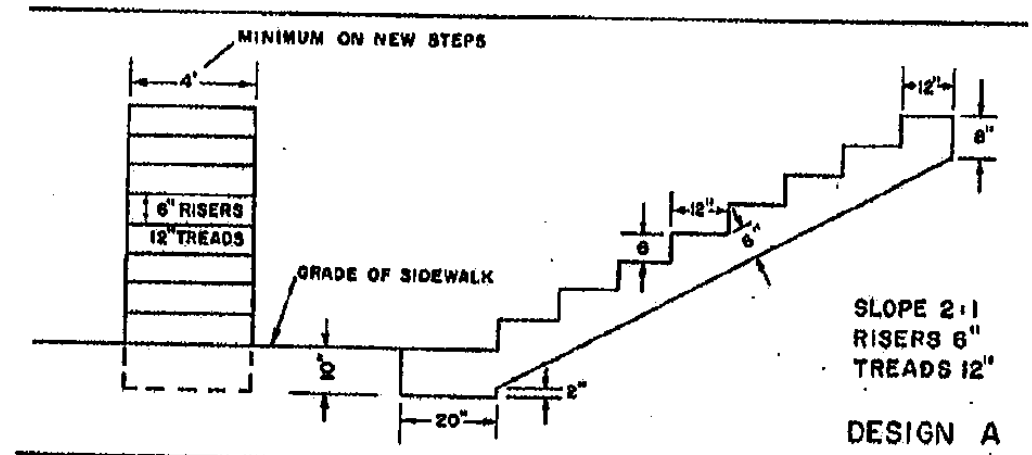

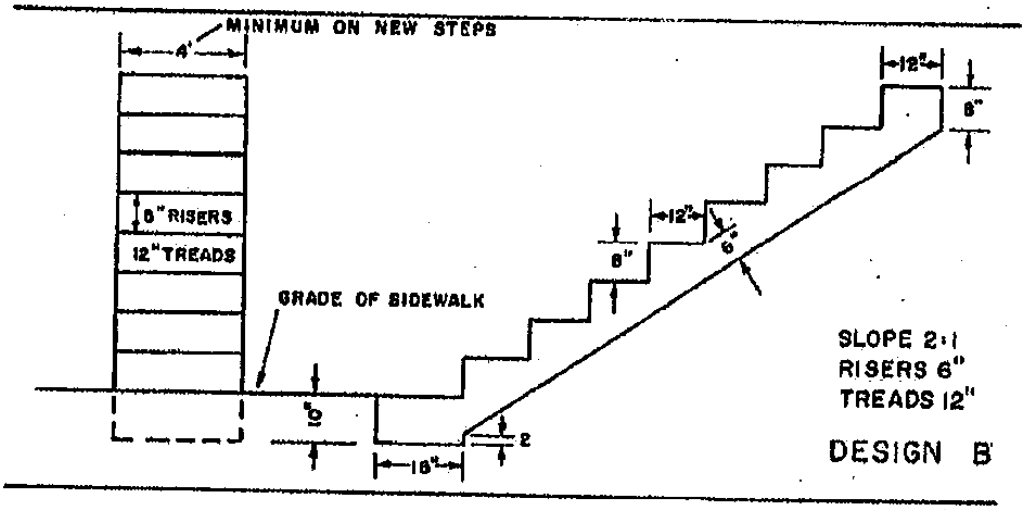

NOTE: WHERE IRON PIPE HAND RAIL IS REQUIRED IT WILL BE SO DESIGNATED BY THE CONTRACTING OFFICER

NOT TO SCALE

TYPICAL DESIGN FOR CEMENT CONCRETE STEPS	CITY OF WORCESTER DEPARTMENT OF PUBLIC WORKS ENGINEERING MARCH 1987 REVISED

ITEM 457 WOOD STEP

A. ***GENERAL***

The work to be done under this item shall include furnishing all the materials, labor and equipment necessary to construct a wood step. Wood steps are to be dimensioned, sized and constructed to match existing steps where specified.

B. ***MEASUREMENT AND PAYMENT***

Wood steps shall be measured in place and paid for at the unit price bid for each contained in the proposal.

The work to be done under Items 461 through 466 shall conform to the applicable provisions of Section 901, (MSSHB)

ITEM 461 8' - 6" RETAINING WALL

A. ***MEASUREMENT AND PAYMENT***

Payment under this item shall be at the unit price bid per linear foot, which shall include full compensation for delivery, labor, equipment, material, patching of roadway (if necessary), and all incidental work necessary to complete the work as specified or as specified by the Contracting Officer.

ITEM 462 GRAVITY CONCRETE WALL

A. ***GENERAL***

The work to be done under this item shall conform to the applicable provision of Section 901, (MSSHB).

B. ***MEASUREMENT AND PAYMENT***

The work to be done under this item shall be paid by the cubic yard.

8'-6" Retaining Wall

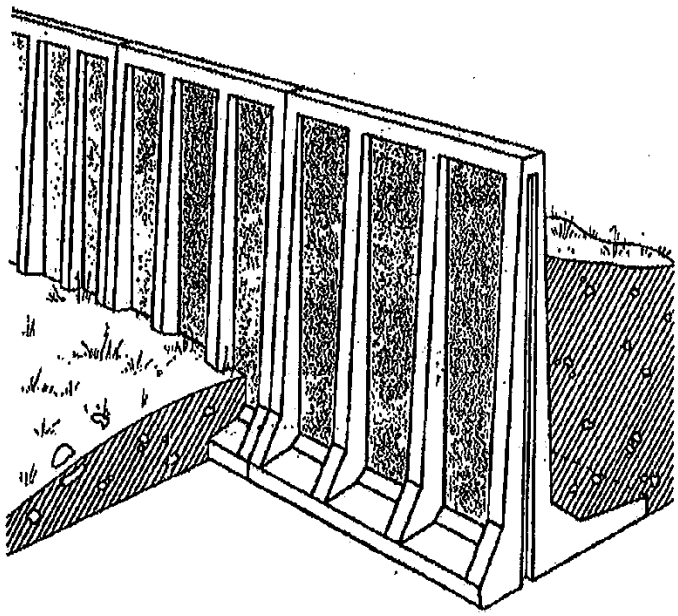

PRECAST CONCRETE RETAINING WALL	CITY OF WORCESTER DEPARTMENT OF PUBLIC WORKS ENGINEERING DATE JAN 1998

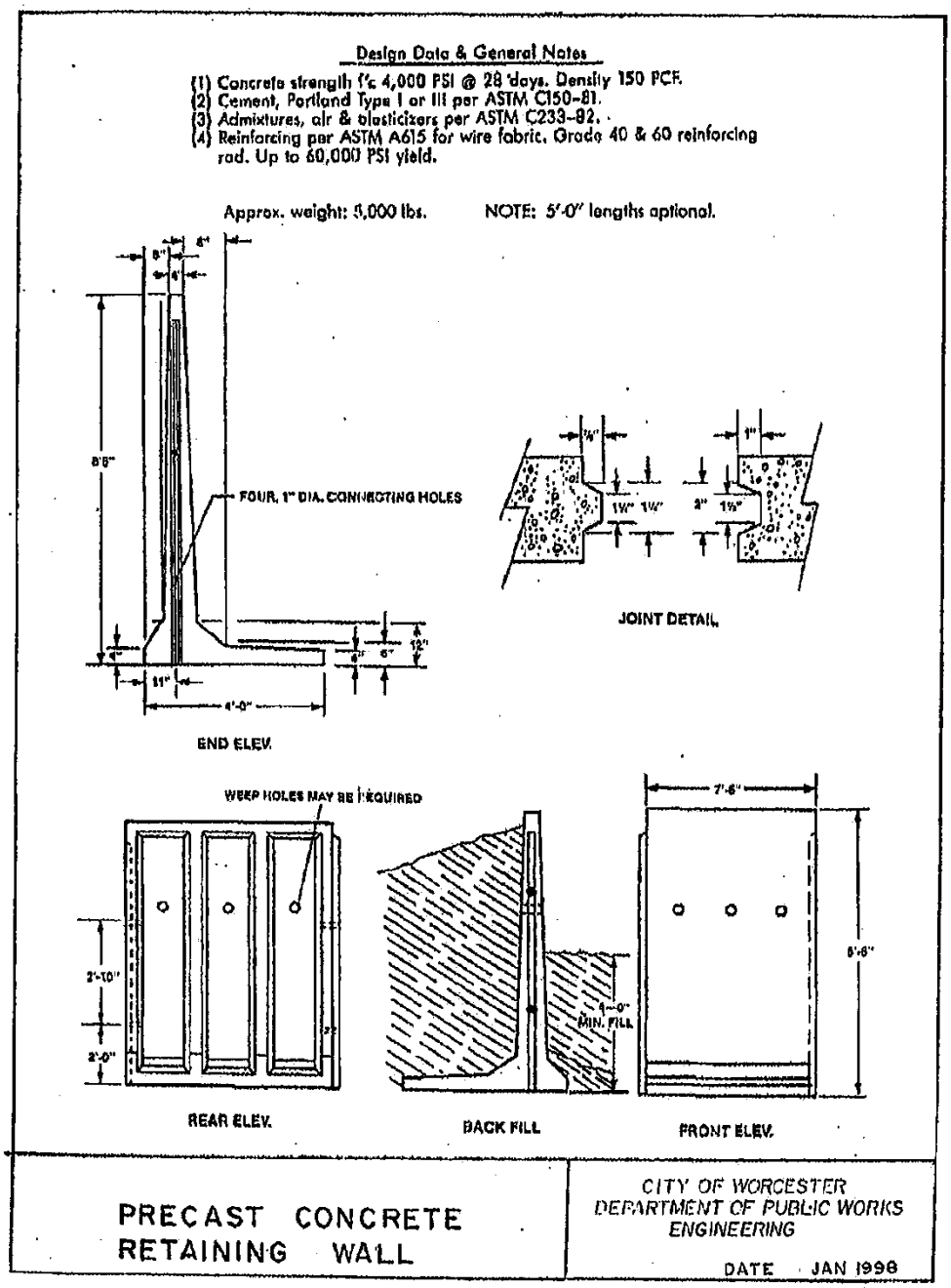
Design Data & General Notes
(1) Concrete strength f'c 4,000 PSI @ 28 days. Density 150 PCF.
(2) Cement, Portland Type I or III per ASTM C150-81.
(3) Admixtures, air & plasticizers per ASTM C233-82.
(4) Reinforcing per ASTM A615 for wire fabric. Grade 40 & 60 reinforcing rod. Up to 60,000 PSI yield.
Approx. weight: 5,000 lbs.
NOTE: 5'-0" lengths optional.
FOUR, 1" DIA. CONNECTING HOLES
END ELEV.
JOINT DETAIL
WEEP HOLES MAY BE REQUIRED
REAR ELEV.
BACK FILL
FRONT ELEV.
PRECAST CONCRETE RETAINING WALL
CITY OF WORCESTER
DEPARTMENT OF PUBLIC WORKS
ENGINEERING
DATE JAN 1998

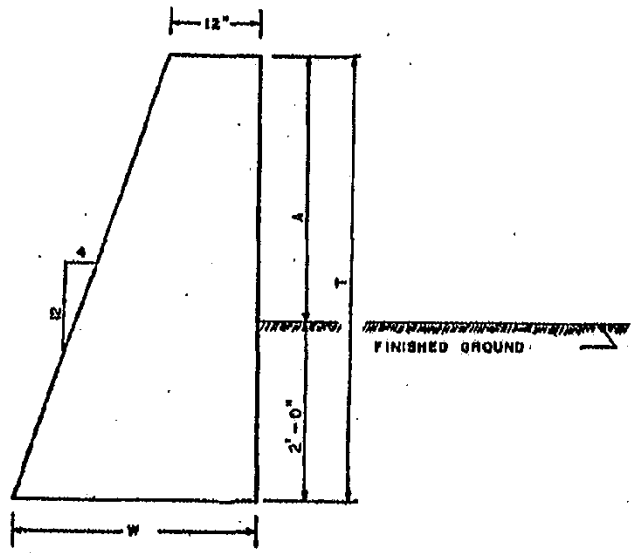

NOTES:
1. CLASS "A" CEMENT CONCRETE TO BE USED.
2. EXPANSION JOINTS TO BE PLACED 90' O.C. MAXIMUM WITH INTERMEDIATE CONSTRUCTION JOINTS PLACED AT 30' O.C. MAXIMUM.
3. ALL CONCRETE DIMENSIONS SHOWN ARE MINIMUM.
4. PAYMENTS WILL BE BASED ON TABLE BELOW.

HEIGHTS		WIDTH	AREA	CU. YDS. PER LIN. FT.
A	T	W	SQ. FT.	
2'-0"	4'-0"	2'-4"	4.667	0.247
2'-6"	4'-6"	2'-6"	7.875	0.292
3'-0"	5'-0"	2'-8"	9.165	0.339
3'-6"	5'-6"	2'-10"	10.541	0.390
4'-0"	6'-0"	3'-0"	12.000	0.444
4'-6"	6'-6"	3'-2"	13.541	0.502
5'-0"	7'-0"	3'-4"	15.162	0.562

LOW RETAINING WALLS

CITY OF WORCESTER
DEPARTMENT OF PUBLIC WORKS
ENGINEERING

ITEM 464 STONE MASONRY WALL (COMPLETE IN PLACE)

ITEM 465 STONE MASONRY WALL, DRY

A. ***GENERAL***

The work to be done under Items 464 and 465 shall conform to the applicable provision of Section 685, (MSSHB).

B. ***MEASUREMENT AND PAYMENT***

Items 464 and 465 shall be paid per square foot, of visible wall face, complete in place.

H	W	D	CONC. MASONRY FOOTING SECTION AREA SQ. FT.	CONC. MASONRY FOOTING CU. YD. PER LIN. FT.	STONE MASONRY EXCLUDING COPING SECTION AREA SQ. FT.	STONE MASONRY EXCLUDING COPING CU. YD. PER LIN. FT.
5.0	0.75	1.25	4.06	0.150	8.00	0.333
5.5			4.38	0.162	10.63	0.394
6.0			4.69	0.174	12.38	0.459
6.5			5.00	0.185	14.16	0.524
7.0			5.31	0.197	16.06	0.594
7.5			5.63	0.208	18.06	0.669
8.0	1.0	1.5	7.50	0.278	20.16	0.747
8.5			7.88	0.292	22.40	0.829
9.0			8.25	0.306	24.79	0.917
9.5			8.63	0.319	27.22	1.008
10.0	1.2	2.0	12.40	0.459	29.80	1.104
10.5			12.90	0.478	32.50	1.204
11.0			13.40	0.496	35.28	1.307
11.5			13.90	0.515	38.21	1.415
12.0			14.40	0.533	41.25	1.528
12.5			14.90	0.552	44.41	1.645
13.0	1.5	2.5	20.00	0.741	47.68	1.766
13.5			20.63	0.764	51.07	1.891
14.0			21.25	0.787	54.53	2.020
14.5			21.88	0.810	58.14	2.153
15.0			22.50	0.833	61.88	2.292
15.5			23.13	0.856	65.72	2.434
16.0			23.75	0.880	69.68	2.581
16.5	1.8	3.0	30.15	1.117	73.76	2.732
17.0			30.90	1.144	77.90	2.885
17.5			31.65	1.172	82.21	3.045
18.0			32.40	1.200	86.63	3.208
18.5			33.15	1.228	91.18	3.377
19.0			33.90	1.256	95.85	3.550
19.5			34.65	1.283	101.25	3.750
20.0			35.40	1.311	106.58	3.947
20.5			36.15	1.339	111.63	4.134
21.0			36.90	1.367	117.00	4.333
21.5			37.65	1.394	122.50	4.537
22.0			38.40	1.422	128.13	4.745
22.5			39.15	1.450	133.88	4.958
23.0			39.90	1.478	139.75	5.176
23.5			40.65	1.506	145.75	5.398
24.0			41.40	1.533	151.88	5.625
24.5			42.15	1.561	158.13	5.856
25.0			42.90	1.589	164.50	6.093
25.5			43.65	1.617	171.00	6.333
26.0			44.40	1.644	177.63	6.579
26.5			45.15	1.672	184.39	6.829

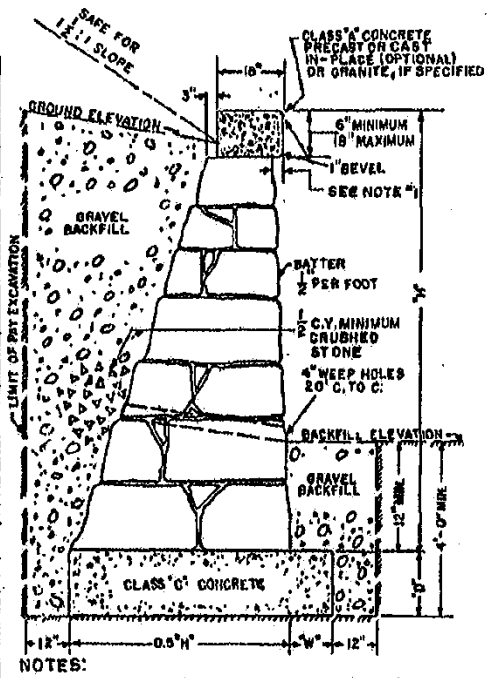

NOTES:

1. COPING OVERHANG TO BE APPROXIMATELY 3" FOR WALLS 10' OR MORE IN HEIGHT AND APPROXIMATELY 2" FOR WALLS LESS THAN 10' IN HEIGHT; IN A CONTINUOUS WALL OF VARYING HEIGHT THE OVERHANG WILL BE APPROXIMATELY 2" TO 3" FOR THE ENTIRE LENGTH.
2. ALL DIMENSIONS SHOWN ARE MINIMUM
3. PAYMENT WILL BE BASED ON THE ACCOMPANYING TABLE

COPING TO BE PRECAST CONCRETE OR GRANITE OF UNIFORM DEPTH FOR ENTIRE LENGTH, DEPTH OF CONCRETE TO BE $\frac{1}{12}$ THE AVERAGE "H" WITHIN THE LIMITS SHOWN. DEPTH OF GRANITE TO BE AS SHOWN ON THE PLANS, 6" OR 8".

FOR CHAIN LINK FENCE ON TOP OF WALL, THE COPING SHALL BE CONCRETE CAST-IN-PLACE WITH A MINIMUM DEPTH OF 12". THE LENGTH OF GALVANIZED PIPE SLEEVES FOR FENCE POSTS SHALL BE EQUAL TO THE DEPTH OF COPING.

CEMENTED STONE MASONRY WALL

CITY OF WORCESTER
DEPARTMENT OF PUBLIC WORKS
ENGINEERING

ITEM 466 HEADWALL CONCRETE, COMPLETE

A. *GENERAL*

The work to be done under this item shall include furnishing and placement of cement concrete for headwalls complete in place. This item shall include forms, reinforcement joints, and all equipment, labor and materials required to complete this work.

B. *MEASUREMENT AND PAYMENT*

Concrete for headwalls shall be measured, installed, in place and shall be paid at the unit price per cubic yard bid therefore in the proposal.

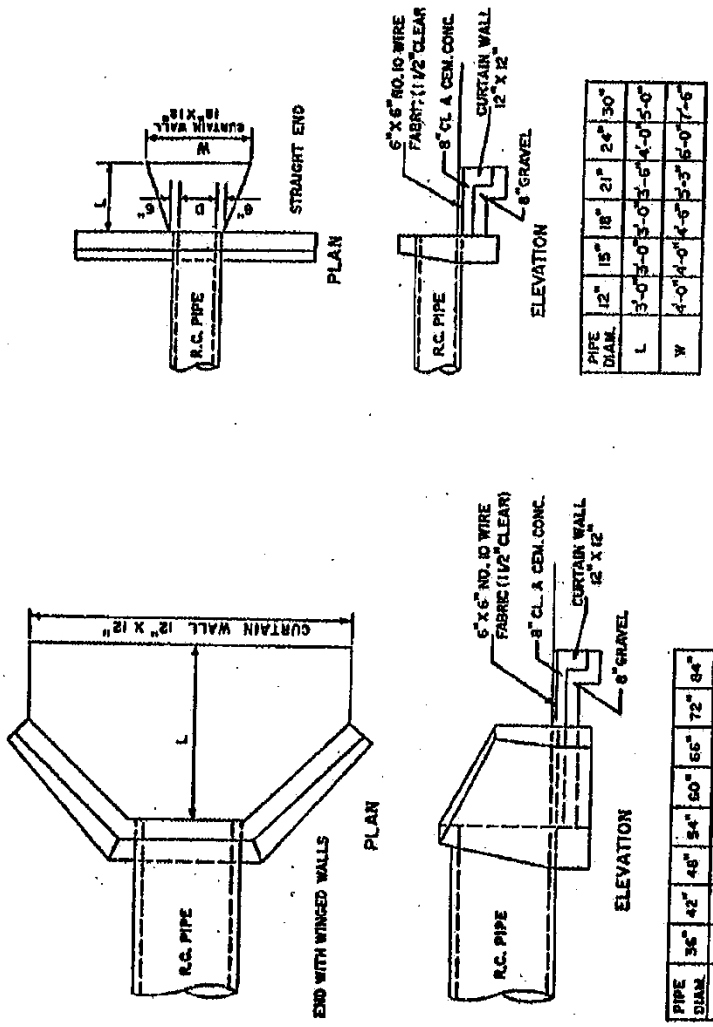

CONCRETE SPLASH PADS

CITY OF WORCESTER
DEPARTMENT OF PUBLIC WORKS
ENGINEERING

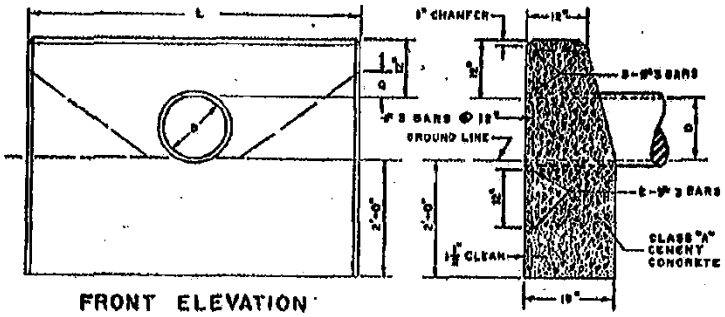

FRONT ELEVATION

END ELEVATION

TRENCH EXCAV. 1'-0" DEPTH	PIPE DIAM.	1½:1 SLOPE			2:1 SLOPE			TRENCH EXCAV. 1'-0" DEPTH
CU. FT.	D	L	CONC. OR R.C.M. CU. YDS.	STEEL LBS.	L	CONC. OR R.C.M. CU. YDS.	STEEL LBS.	CU. FT.
21.60	8"	4'-2"	0.77	15	5'-10"	1.08	21	27.40
23.91	10"	4'-10"	0.92	20	6'-8"	1.28	23	30.35
26.25	12"	5'-6"	1.06	21	7'-6"	1.49	29	33.25
29.75	15"	6'-6"	1.34	24	8'-9"	1.82	32	37.83
33.25	18"	7'-6"	1.61	30	10'-0"	2.18	39	42.00
37.35	21"	8'-6"	1.95	34	11'-6"	2.62	43	47.25
39.38	24"	9'-3"	2.16	36	12'-6"	2.97	50	50.75
43.75	30"	10'-6"	2.63	44	15'-0"	3.66	62	59.50
	a	4" FOR 1½:1 SLOPE						
		6" FOR 2:1 SLOPE						

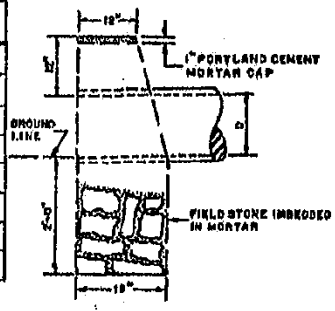

END ELEVATION

CONCRETE CRADLE FOR PIPE CULVERTS

NOTE:
1. FOR DESCRIPTIONS, MATERIALS AND CONSTRUCTION METHODS, SEE LATEST SPECIFICATIONS.
2. ALL CONCRETE DIMENSIONS SHOWN ARE MINIMUM.
3. PAYMENTS WILL BE BASED ON THE ACCOMPANYING TABLE.

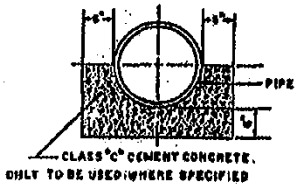

CONCRETE AND FIELD STONE MASONRY ENDS FOR 8" TO 30" PIPE CULVERT	CITY OF WORCESTER DEPARTMENT OF PUBLIC WORKS ENGINEERING

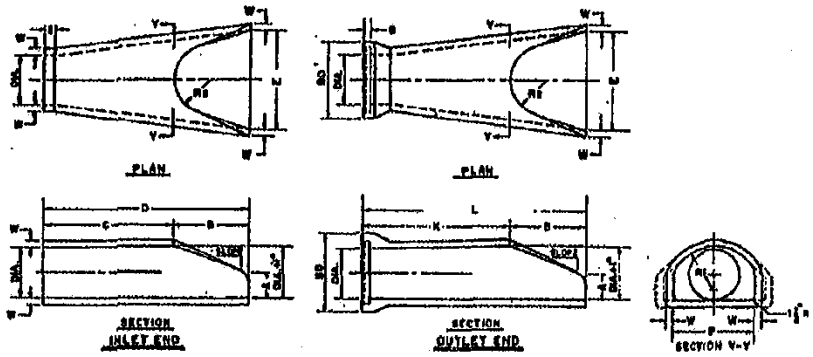

DIA	W	A	B	C	D	E	BD	K	L	P	DIA. ±1/8"	R1	R2	S	D	SLOPE
12	6"	6"	2'-0"	4'-0"	3'-1"	1'-6"	20"	4'-0"	6'-0"	10"	13"	40"	8"	4"	2"	3:1
15	6"	6"	2'-6"	5'-0"	3'-10"	1'-9"	24"	4'-6"	6'-6"	12"	16"	52"	11"	4"	2"	3:1
18	6"	6"	3'-0"	5'-6"	4'-7"	2'-0"	30"	4'-10"	7'-0"	14"	19"	65"	12"	4"	2"	3:1
21	6"	6"	3'-6"	6'-0"	5'-4"	2'-3"	37"	5'-3"	7'-6"	16"	22"	78"	13"	4"	2"	3:1
24	6"	6"	3'-9"	6'-6"	6'-1"	2'-6"	40"	5'-6"	8'-0"	18"	25"	90"	14"	4"	2"	3:1

FOR BELL & SPIGOT PIPE

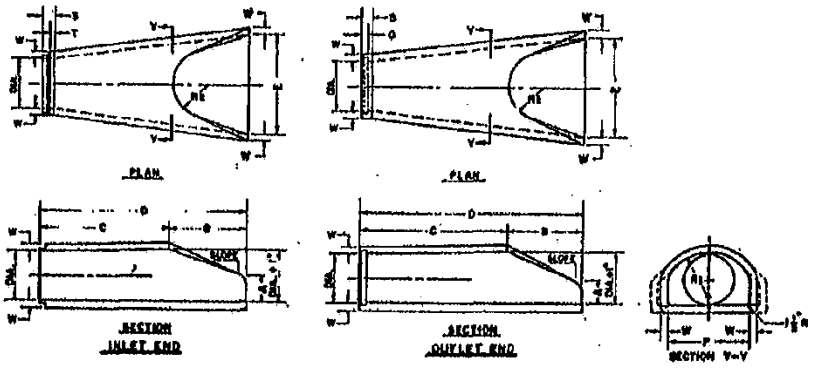

DIA	W	A	B	C	D	E	P	DIA. ±1/8"	R1	R2	S	D	SLOPE
27	6"	6"	4'-0"	6'-1"	4'-1"	2'-4"	36"	40"	[illegible]	[illegible]	2"	4"	3:1
30	6"	6"	4'-6"	6'-7"	4'-4"	2'-7"	37"	44"	[illegible]	[illegible]	2"	4"	3:1
36	6"	6"	5'-0"	7'-0"	4'-7"	2'-7"	37"	54"	[illegible]	[illegible]	2"	4"	3:1
42	6"	6"	5'-6"	7'-6"	5'-1"	2'-8"	38"	63"	[illegible]	[illegible]	2"	4"	3:1
48	6"	6"	6'-0"	8'-0"	5'-7"	2'-9"	39"	72"	[illegible]	[illegible]	2"	4"	3:1

FOR TONGUE & GROOVE PIPE

NOTES:
1. SEE SPECIFICATIONS FOR THE TYPE OF PIPE TO BE USED (BELL SPIGOT OR TONGUE & GROOVE)
2. SEE SPECIFICATIONS FOR THE TYPE AND PLACING OF STEEL REINFORCEMENT
3. THE JOINTS ARE TO BE COMPATIBLE WITH THE MAIN RUN OF PIPE

REINFORCED CONCRETE PIPE FLARED ENDS	CITY OF WORCESTER DEPARTMENT OF PUBLIC WORKS ENGINEERING

ITEM 467 REMOVE AND REPLACE EXISTING GUARDRAIL

ITEM 468 GUARDRAIL STEEL TYPE SS

ITEM 468.1 WOODEN GUARDRAIL

ITEM 468.2 WOODEN GUARDRAIL – REMOVE AND REPLACE

A. ***GENERAL***

The work to be done under Items 467, 468, 468.1, and 468.2 shall conform to applicable provisions of Section 630, (MSSHB).

B. ***DESCRIPTION OF WORK***

The work done under this item shall provide all materials, equipment, labor necessary to complete the work. The contractor will be required to submit a sample of each material to the owner for approval before ordering materials. The samples shall demonstrate the final surface color, finish and shape that will be provided throughout the project. All samples shall be full size.

C. ***MATERIALS***

Wooden posts, wooden rails shall be made of southern yellow pine, CCA treated to retention level of .40. Fasteners shall be hot dipped galvanized in accordance with ASTM A153.

D. ***MEASUREMENT AND PAYMENT***

These items shall be paid for at the contract unit price per linear foot, complete in place, including post and steel beam terminal sections.

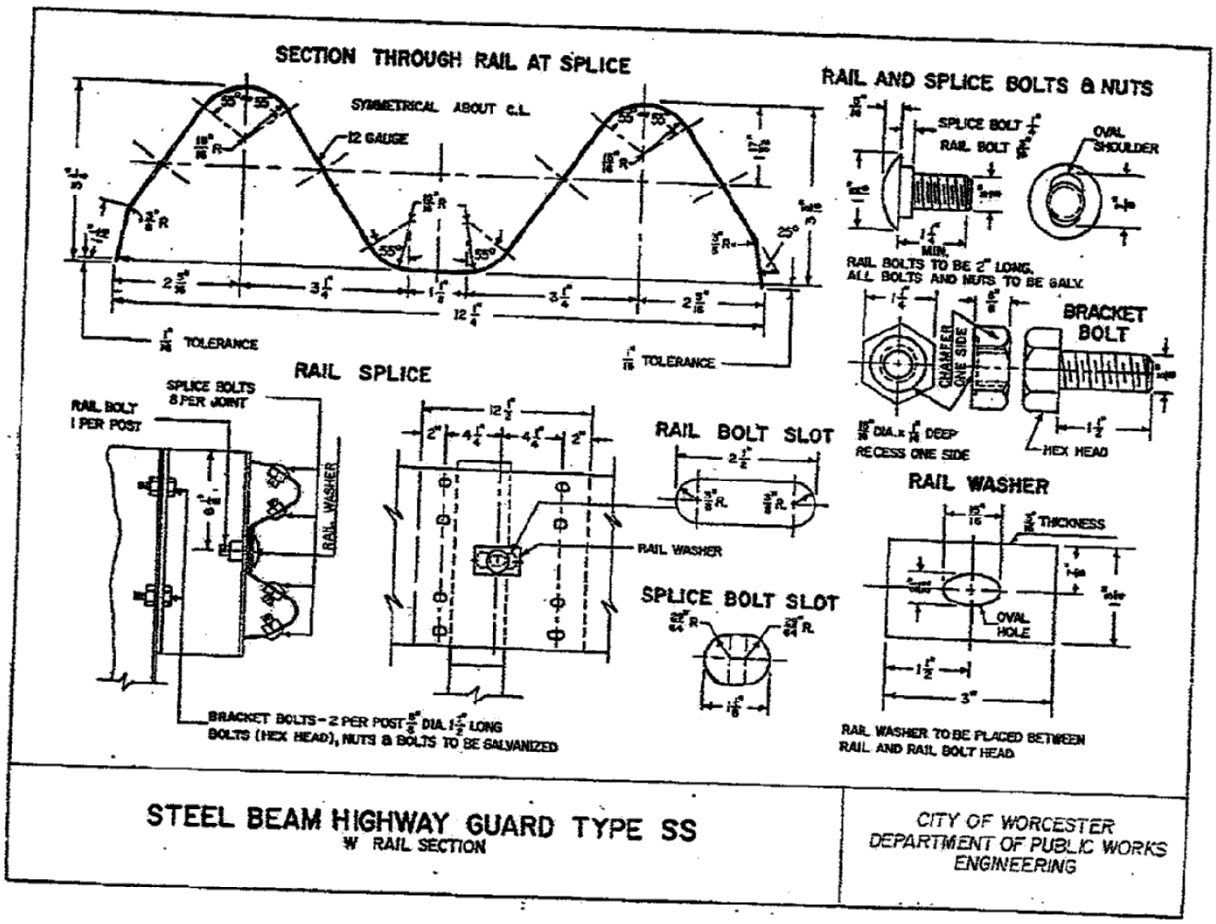
SECTION THROUGH RAIL AT SPLICE
SYMMETRICAL ABOUT C.L.
12 GAUGE
TOLERANCE
TOLERANCE
RAIL AND SPLICE BOLTS & NUTS
SPLICE BOLT
RAIL BOLT
OVAL SHOULDER
MIN.
RAIL BOLTS TO BE 2" LONG, ALL BOLTS AND NUTS TO BE GALV.
BRACKET BOLT
CHAMFER ONE SIDE
RECESS ONE SIDE
HEX HEAD
RAIL SPLICE
SPLICE BOLTS 8 PER JOINT
RAIL BOLT 1 PER POST
RAIL WASHER
RAIL BOLT SLOT
RAIL WASHER
SPLICE BOLT SLOT
RAIL WASHER
THICKNESS
OVAL HOLE
BRACKET BOLTS - 2 PER POST DIA. LONG BOLTS (HEX HEAD), NUTS & BOLTS TO BE GALVANIZED
RAIL WASHER TO BE PLACED BETWEEN RAIL AND RAIL BOLT HEAD
STEEL BEAM HIGHWAY GUARD TYPE SS
W RAIL SECTION
CITY OF WORCESTER
DEPARTMENT OF PUBLIC WORKS
ENGINEERING

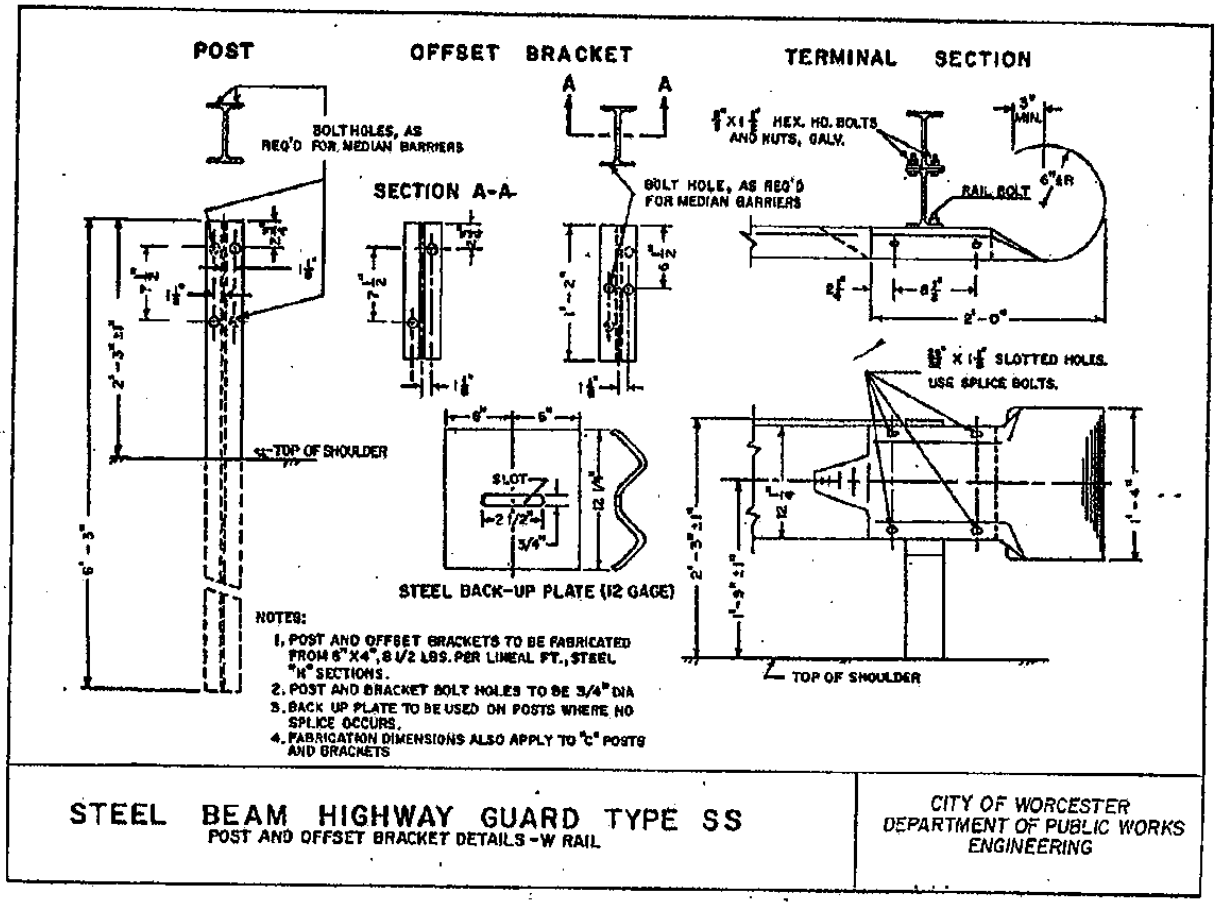

STEEL BEAM HIGHWAY GUARD TYPE SS
POST AND OFFSET BRACKET DETAILS - W RAIL

CITY OF WORCESTER
DEPARTMENT OF PUBLIC WORKS
ENGINEERING

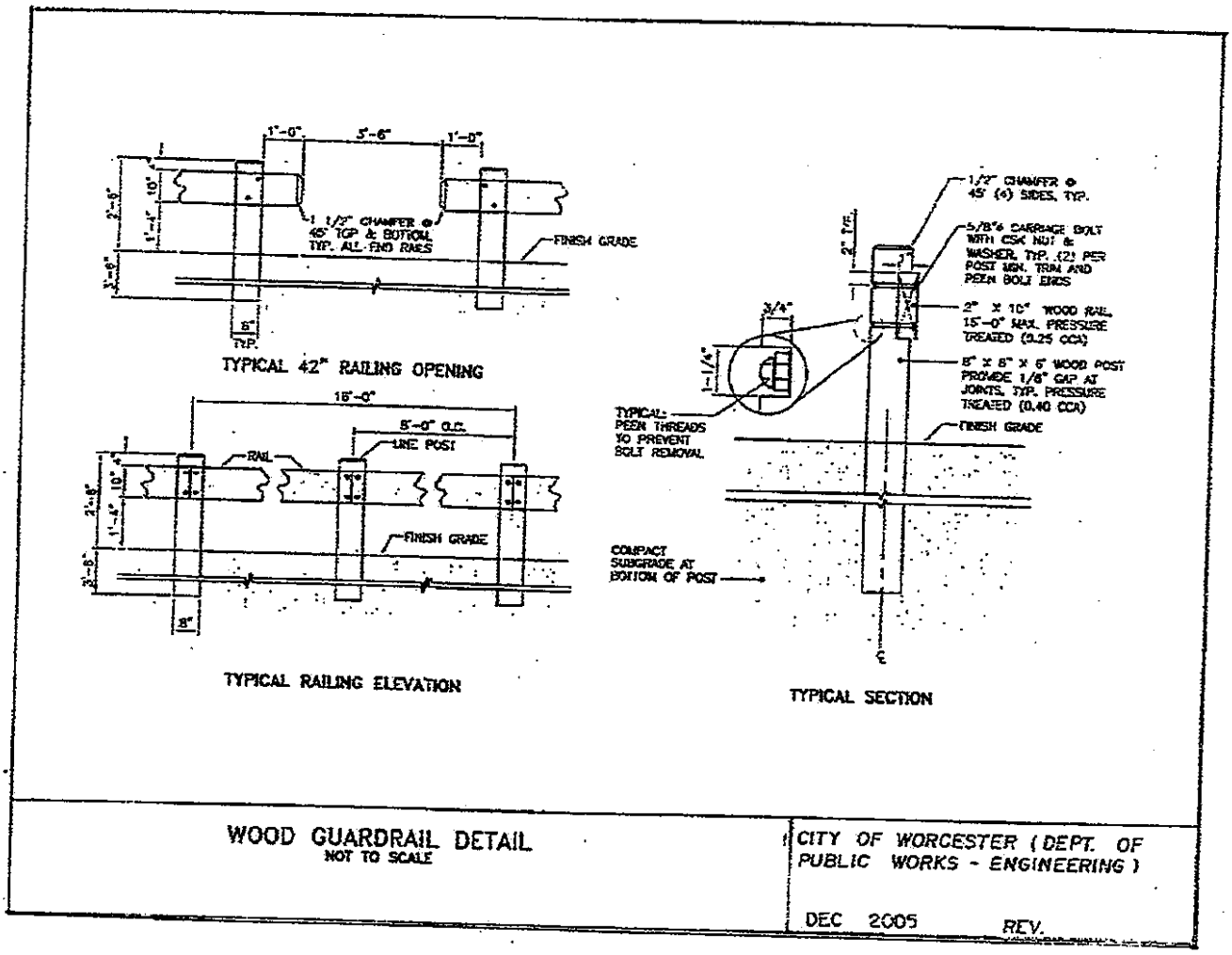
1'-0"
5'-6"
1'-0"
1 1/2" CHAMFER @ 45° TOP & BOTTOM TYP. ALL END RAILS
FINISH GRADE
8" TYP.
TYPICAL 42" RAILING OPENING
16'-0"
5'-0" O.C.
LINE POST
RAIL
FINISH GRADE
8"
TYPICAL RAILING ELEVATION
1/2" CHAMFER @ 45° (4) SIDES, TYP.
5/8"ø CARRIAGE BOLT WITH CSK NUT & WASHER, TYP. (2) PER POST MIN. TRIM AND PEEN BOLT ENDS
2" X 10" WOOD RAIL, 15'-0" MAX. PRESSURE TREATED (0.25 CCA)
8" X 8" X 6' WOOD POST PROVIDE 1/8" GAP AT JOINTS, TYP. PRESSURE TREATED (0.40 CCA)
FINISH GRADE
TYPICAL: PEEN THREADS TO PREVENT BOLT REMOVAL
COMPACT SUBGRADE AT BOTTOM OF POST
TYPICAL SECTION
WOOD GUARDRAIL DETAIL
NOT TO SCALE
CITY OF WORCESTER (DEPT. OF PUBLIC WORKS - ENGINEERING)
DEC 2005
REV.

ITEM 469 PRECAST CONCRETE BARRIER

A. *GENERAL*

The work to be done under this item shall conform to the relevant provisions of Section 629, (MSSHB).

Pre-cast concrete barrier shall be supplied complete in place at the locations shown on the plans and/or as directed by the Contracting Officer.

B. *MEASUREMENT AND PAYMENT*

Payment under this item shall be at the contract unit price bid per linear foot that shall include full compensation for all necessary barrier location, labor, equipment, materials, and all incidental work necessary to complete the work as specified. All barriers under this item shall be retained by and will become the property of the City of Worcester.

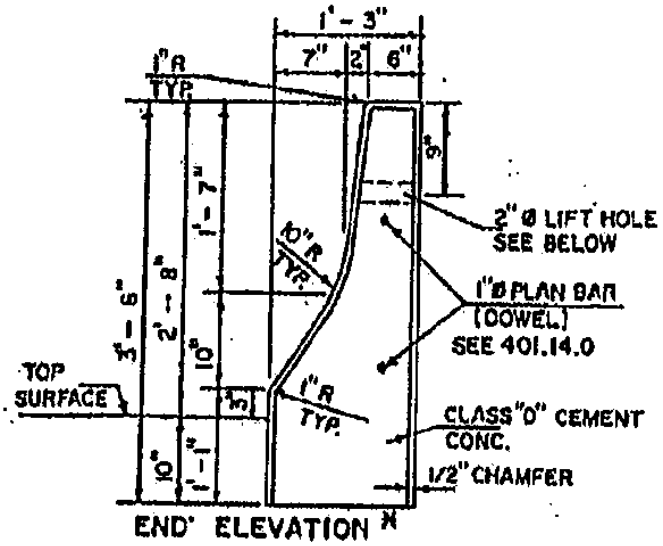

END ELEVATION H

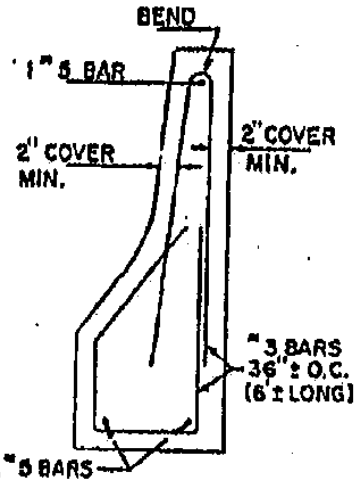

REINFORCING DIAGRAM

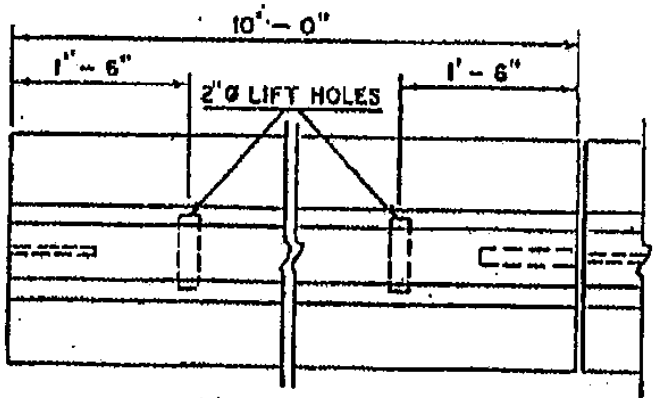

LIFT HOLES

NOTES:

1. THE MAXIMUM OPENING BETWEEN SECTIONS TO BE NO GREATER THAN 1/4 INCH.
2. A 1/2 INCH PREMOULDED EXPANSION JOINT FILLER TO BE PLACED EVERY 40 FEET.
H. FOR FOUNDATION DETAILS SEE 401.15.0.
FOR DESCRIPTION, MATERIALS, AND CONSTRUCTION METHOD SEE LATEST SPECIFICATIONS.
FOR BARRIER DETAILS ON STRUCTURES, SEE BRIDGE MANUAL.

PRE-CAST CONCRETE MEDIAN BARRIER SINGLE FACE	CITY OF WORCESTER DEPARTMENT OF PUBLIC WORKS ENGINEERING

ITEM 470 WOOD FENCE, REMOVE AND RESET

ITEM 472 WIRE FENCE, REMOVE AND RESET

ITEM 474 CHAIN LINK FENCE, 48 INCHES

ITEM 475 CHAIN LINK FENCE, 60 INCHES

ITEM 476 CHAIN LINK FENCE, 72 INCHES

A. ***GENERAL***

The work to be done under Items 470 & 472 shall conform to the applicable provisions of Section 665, (MSSHB).

The work to be done under Items 474 through 476 shall conform to the applicable provisions of Section 644, (MSSHB.

B. ***MEASUREMENT AND PAYMENT***

Payment for these items shall be paid for at the contract unit price per linear foot (complete in place) including concrete base, line posts and gates.

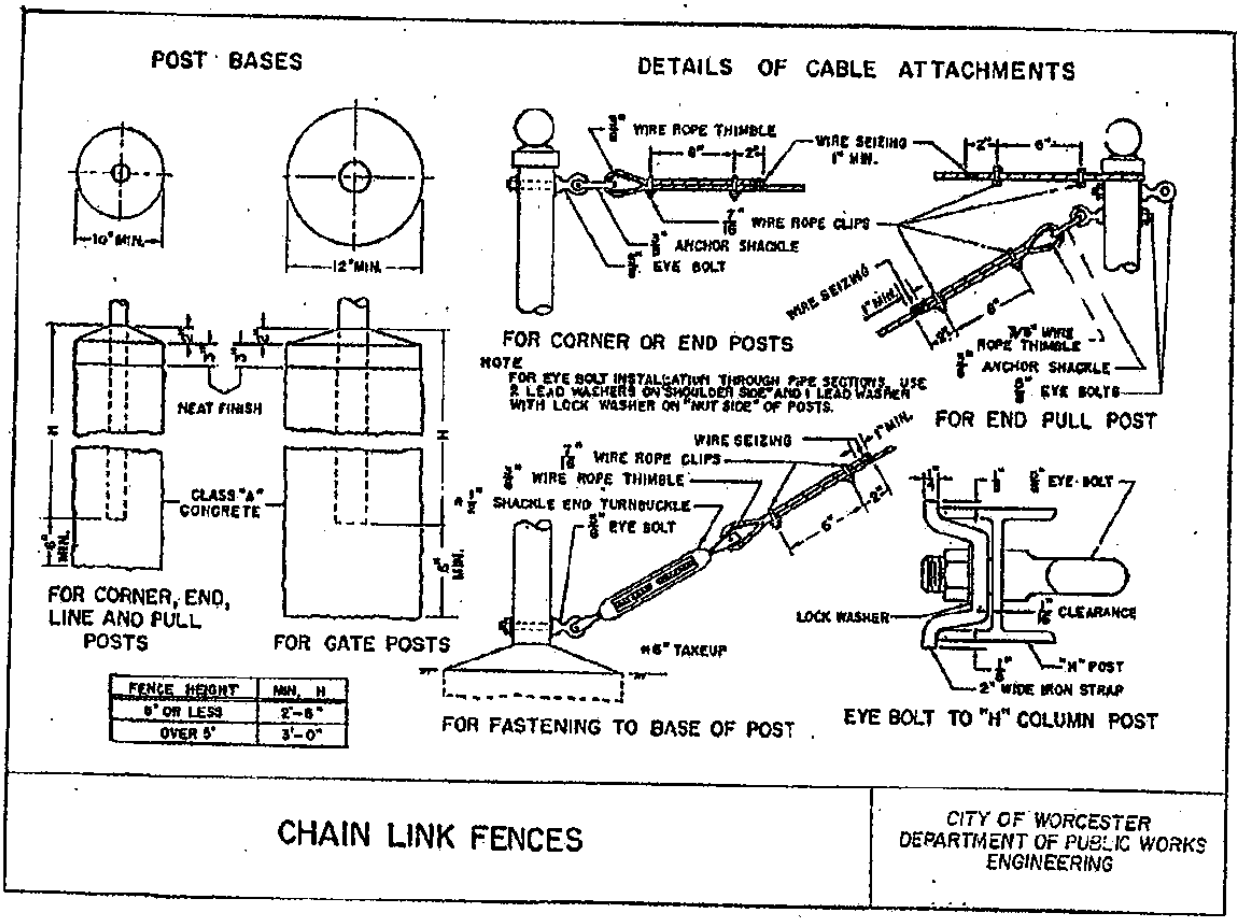
POST BASES
DETAILS OF CABLE ATTACHMENTS
10" MIN.
12" MIN.
WIRE ROPE THIMBLE
WIRE SEIZING 1" MIN.
WIRE ROPE CLIPS
ANCHOR SHACKLE
EYE BOLT
FOR CORNER OR END POSTS
NOTE
FOR EYE BOLT INSTALLATION THROUGH PIPE SECTIONS, USE 2 LEAD WASHERS ON SHOULDER SIDE AND 1 LEAD WASHER WITH LOCK WASHER ON "NUT SIDE" OF POSTS.
WIRE SEIZING
1" MIN.
3/8" WIRE ROPE THIMBLE
ANCHOR SHACKLE
EYE BOLTS
FOR END PULL POST
NEAT FINISH
CLASS "A" CONCRETE
FOR CORNER, END, LINE AND PULL POSTS
FOR GATE POSTS
WIRE SEIZING
WIRE ROPE CLIPS
WIRE ROPE THIMBLE
SHACKLE END TURNBUCKLE
EYE BOLT
TAKEUP
FOR FASTENING TO BASE OF POST
EYE BOLT
LOCK WASHER
CLEARANCE
"H" POST
2" WIDE IRON STRAP
EYE BOLT TO "H" COLUMN POST
FENCE HEIGHT | MIN. H
6' OR LESS | 2'-6"
OVER 6' | 3'-0"
CHAIN LINK FENCES
CITY OF WORCESTER
DEPARTMENT OF PUBLIC WORKS
ENGINEERING

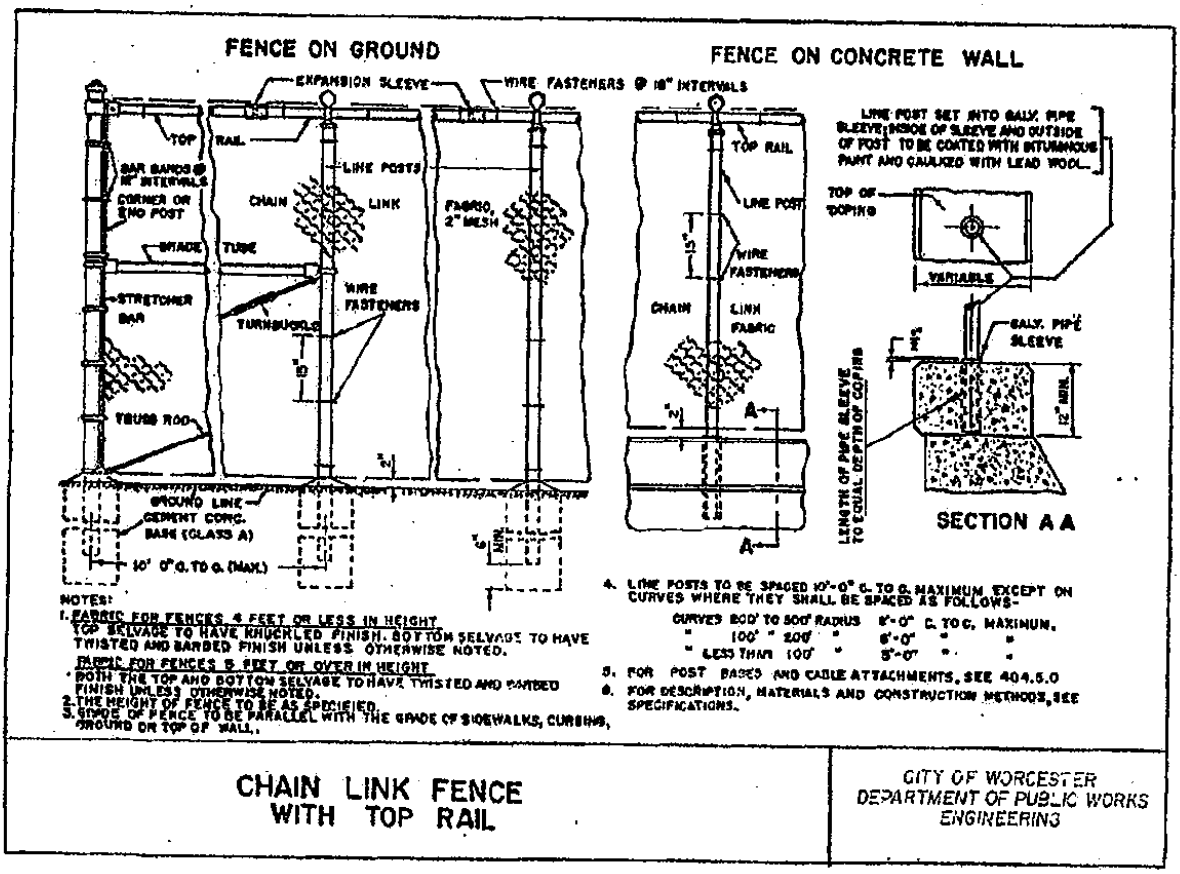
FENCE ON GROUND
FENCE ON CONCRETE WALL
EXPANSION SLEEVE
WIRE FASTENERS @ 18" INTERVALS
TOP RAIL
BAR BANDS @ 18" INTERVALS
CORNER OR END POST
LINE POSTS
CHAIN LINK
FABRIC, 2" MESH
BRACE TUBE
STRETCHER BAR
TURNBUCKLE
WIRE FASTENERS
TRUSS ROD
GROUND LINE
CEMENT CONC. BASE (CLASS A)
10' 0" O. TO O. (MAX.)
TOP RAIL
LINE POST
WIRE FASTENERS
CHAIN LINK FABRIC
LINE POST SET INTO GALV. PIPE SLEEVE; INSIDE OF SLEEVE AND OUTSIDE OF POST TO BE COATED WITH BITUMINOUS PAINT AND CAULKED WITH LEAD WOOL.
TOP OF COPING
VARIABLE
GALV. PIPE SLEEVE
LENGTH OF PIPE SLEEVE TO EQUAL DEPTH OF COPING
12" MIN.
SECTION A A
NOTES:
1. FABRIC FOR FENCES 4 FEET OR LESS IN HEIGHT
TOP SELVAGE TO HAVE KNUCKLED FINISH. BOTTOM SELVAGE TO HAVE TWISTED AND BARBED FINISH UNLESS OTHERWISE NOTED.
FABRIC FOR FENCES 5 FEET OR OVER IN HEIGHT
BOTH THE TOP AND BOTTOM SELVAGE TO HAVE TWISTED AND BARBED FINISH UNLESS OTHERWISE NOTED.
2. THE HEIGHT OF FENCE TO BE AS SPECIFIED.
3. GRADE OF FENCE TO BE PARALLEL WITH THE GRADE OF SIDEWALKS, CURBING, GROUND OR TOP OF WALL.
4. LINE POSTS TO BE SPACED 10'-0" O. TO O. MAXIMUM EXCEPT ON CURVES WHERE THEY SHALL BE SPACED AS FOLLOWS-
CURVES 200' TO 500' RADIUS 8'-0" O. TO O. MAXIMUM.
" 100' " 200' " 6'-0" " "
" LESS THAN 100' " 5'-0" " "
5. FOR POST BASES AND CABLE ATTACHMENTS, SEE 404.5.0
6. FOR DESCRIPTION, MATERIALS AND CONSTRUCTION METHODS, SEE SPECIFICATIONS.
CHAIN LINK FENCE WITH TOP RAIL
CITY OF WORCESTER
DEPARTMENT OF PUBLIC WORKS
ENGINEERING

DOUBLE GATES

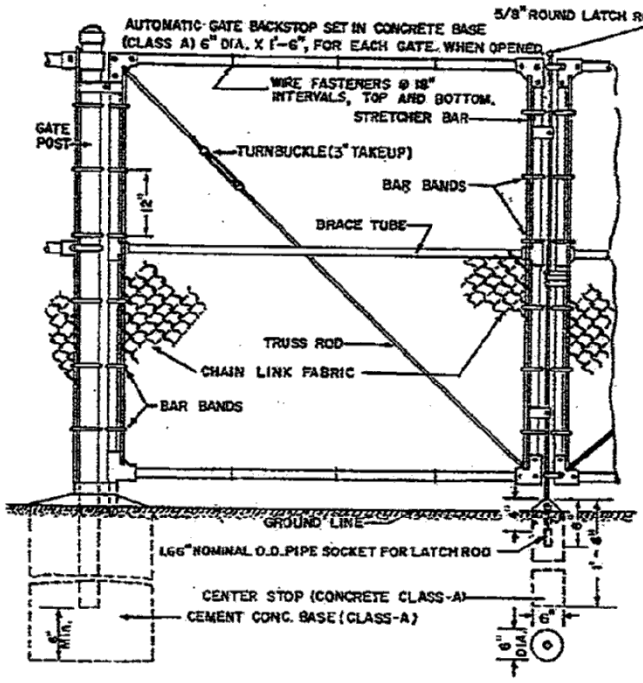

NOTE:

1. TUBULAR GATE POSTS –

		STEEL	ALUMINUM
* SINGLE GATE OPENING UP TO	6'.	4" NOM. O.D.	$2\frac{7}{8}$" NOM. O.D.
DOUBLE " " " "	12'.	"	"
* SINGLE " "	7' – 13'.	4" NOM. O.D.	4" NOM. O.D.
DOUBLE " "	13' – 26'.	"	"
* SINGLE " "	14' – 18'.	4" NOM. O.D.	$6\frac{5}{8}$" NOM. O.D
DOUBLE " "	27' – 36'.	"	"

THE ABOVE LIMITS OF THE OPENINGS ARE INCLUSIVE

2. GATE FRAMES & BRACES

	STEEL	ALUMINUM
SINGLE GATE FRAME UP TO 6' W.	1.66 N.O.D.	1.90 NOM. O.D.
SINGLE GATE FRAME OVER 6' W.	1.90 N.O.D.	1.90 NOM. O.D.

3. TRUSS RODS

	STEEL	ALUMINUM
DIAMETER	$\frac{3}{8}$"	$\frac{3}{8}$"

4. CHAIN LINK FABRIC FOR GATES TO BE THE SAME AS REQUIRED FOR FENCE.

5. FOR GATE POST BASE, SEE 404.5.0

6. FOR DESCRIPTION, MATERIALS AND CONSTRUCTION METHODS, SEE SPECIFICATIONS.

* END POSTS TO BE USED ON LATCH SIDE OF SINGLE GATE OPENINGS.

CHAIN LINK FENCE – GATE

CITY OF WORCESTER
DEPARTMENT OF PUBLIC WORKS
ENGINEERING

ITEM 478 METAL PIPE RAIL

A. ***GENERAL***

The work under Item 478 shall conform to the applicable provisions of Section 660, (MSSHB).

B. ***MEASUREMENT AND PAYMENT***

Payment for these items shall be paid for at the contract unit price per linear foot (complete in place).

GALVANIZED STEEL PIPE FENCE

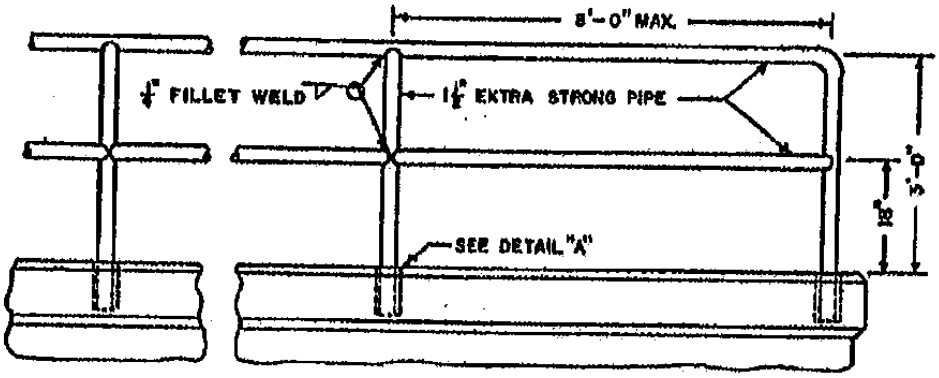

GALVANIZED STEEL PIPE HAND RAIL

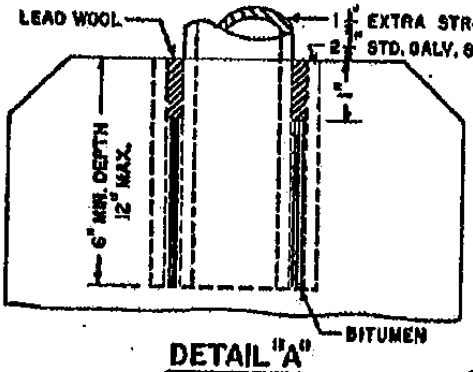

NOTES:

1. WHEN USED ON A CURVE ALL RAILINGS TO BE CURVED TO LINE BEFORE ERECTION.
2. GALV. STEEL PIPE FENCE & HAND RAIL TO FOLLOW GRADE OF COPING OR STRUCTURE.
3. STANDARD OR SPECIAL FITTINGS ARE TO BE USED OR JOINTS MAY BE WELDED.
4. FOR DESCRIPTIONS, MATERIALS AND CONSTRUCTION METHODS, SEE LATEST SPECS.

DETAIL "A"

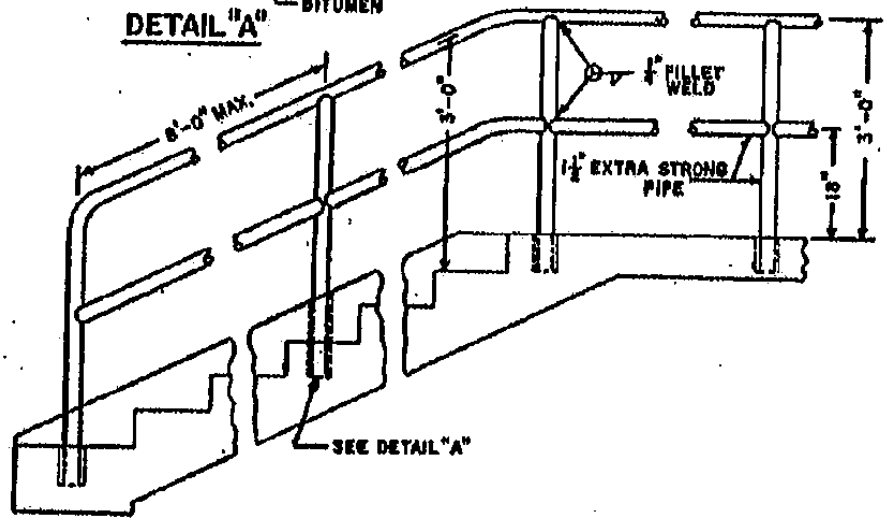

GALVANIZED STEEL PIPE HAND RAIL GALVANIZED STEEL PIPE FENCE	*CITY OF WORCESTER* *DEPARTMENT OF PUBLIC WORKS* *ENGINEERING*

ITEM 480 SWEEPING

A. ***GENERAL***

All streets where existing hardened surface shall be utilized as a base, the pavement shall be cleared of all foreign matter and base material. These streets shall be dry before the prime coat is applied.

All streets that are pulverized and based or milled and leveled, sweeping shall be considered a subsidiary obligation of the Contractor.

B. ***MEASUREMENT AND PAYMENT***

The method of payment for sweeping shall be at the bid price per square yard (overlays only).

ITEM 481 ORNAMENTAL BOLLARD (COMPLETE IN PLACE)

A. ***GENERAL***

This work shall consist of furnishing and installing Bollards on existing foundation in accordance with this specification and as shown on the plans and/or directed by the Engineer.

B. ***MATERIALS***

Bollards shall be Model Number AB2742U (with ball top) as provided by

Beacon Products, Inc. or approved equal. Finish shall be 2 coats polyurethane resin and 2 coats

2-component polyurethane paint, color black. All hardware shall be tamper proof. Concrete foundation shall be in accordance with the manufacturer's guidelines.

C. ***SUBMITTALS***

The Contractor shall submit shop drawings to the Engineer for approval prior to ordering the Bollards.

D. ***CONSTRUCTION METHODS:***

Prior to the installation of the concrete base for the Bollards, the Contractor shall field review the location of each bollard with the Engineer. Once the locations have been approved by the Engineer the Contractor shall make every effort to install the new ornamental bollard on the existing foundation utilizing the existing anchor bolts in accordance with the manufacturer's guidelines. If required, the contractor shall carefully realign any anchor bolts that prevent the ornamental bollard from being correctly and securely installed. Should it not be possible for any anchor bolt to be realigned to the Engineer's satisfaction, the contractor shall drill and grout new anchor bolts to receive the new ornamental bollard. No additional payment shall be made to the contractor for this effort.

E. ***MEASUREMENT AND PAYMENT***

This item of work shall be paid for at the contract unit price bid per each, which price and payment shall constitute full compensation for furnishing and installing all materials including transition plates, new anchor bolts, drilling and regrouting new bolts and all other materials, connections, labor, equipment, tools, appurtenances, and incidentals necessary to satisfactorily complete this item of work complete and accepted by the Engineer.

ITEM 481.1 ORNAMENTAL BOLLARD (REMOVE AND RESET)

A. ***GENERAL***

This work shall consist of removing and resetting existing ornamental bollards on existing foundations in accordance with this specification and as shown on the plans and/or as directed by the Engineer.

B. ***CONSTRUCTION METHODS***

Prior to the installation of the ornamental bollard the Contractor shall field review the location of each Bollard with the Engineer. Once the locations have been approved by the Engineer the Contractor shall make every effort to install the existing ornamental bollard on the existing foundation utilizing the existing anchor bolts in accordance with the manufactures guidelines. If required, the Contractor shall carefully realign any anchor bolts that prevent the ornamental bollard from being correctly and securely installed. Should it not be possible for any bolt to be realigned to the Engineer's satisfaction, the Contractor shall drill and grout new anchor bolts to receive the existing ornamental bollard. No additional payment shall be made to the Contractor for this effort.

C. ***MEASUREMENT AND PAYMENT***

This item of work shall be paid for at the contract unit price bid per each, which price and payment shall constitute full compensation for furnishing and installing all materials, connections, labor, equipment, tools, appurtenances, and incidentals necessary to satisfactorily complete this item of work complete and accepted by the Engineer.

ITEM 481.2 ORNAMENTAL BOLLARD (REMOVE AND DISPOSE)

A. ***GENERAL***

The Contractor shall furnish all additional labor, materials and equipment required to remove and dispose of existing ornamental bollards as directed by the Contracting Officer.

B. ***MEASUREMENT AND PAYMENT***

The unit bid price per each shall be full compensation for all work required including salvage and delivery to the City's Department of Public Works and Parks – 1065 Millbury Street Yard of any castings as directed by the Contracting Officer.

SECTION 500 - TRAFFIC

Items 501 through 504 shall conform to specifications on file for Retroflective White and Yellow and Black Lead Free Hot-Applied Thermoplastic Marking Materials at the Department of Public Works and Parks and the Contractor shall provide all labor, material and equipment for the complete application of the item as shown on the drawings and described in these specifications at the unit price as bid and as shown in the proposal.

ITEM 501 4 INCH REFLECTORIZED WHITE LINE (THERMOPLASTIC) (LF)

ITEM 502 4 INCH REFLECTORIZED YELLOW LINE (THERMOPLASTIC) LF

ITEM 503 12 INCH REFLECTORIZED WHITE LINE (THERMOPLASTIC) LF

ITEM 504 PAVEMENT ARROW/LEGEND REFLECTORIZED WHITE (THERMOPLASTIC) EACH

A. ***MATERIALS***

The materials used for this section shall conform to the applicable portions of Section M7.00.0 Pavement Markings (MSSHB).

B. ***EXECUTION***

SURFACE PREPARATION

The pavement shall be dry and free of sand, grease, oil or other foreign substances. Bituminous concrete shall have been in place for at least 48 hours prior to paint application.

APPLICATION

In accordance with the manufacturer's specification and with good painting practices, markings shall be applied at locations and at specified dimensions as designated on the drawings.

All applicable requirements of Section 860 (MSSHB) shall be met for work in this section.

PROTECTION

The Contractor shall protect pavement markings until sufficiently dry to bear traffic. Cones or like barriers shall be used to protect markings.

C. ***MEASUREMENT AND PAYMENT***

Item 501, 502, and 503 are paid for by the linear foot. Item 504 shall be paid for per each. The price shall include all work necessary to successfully perform all tasks associated with these specifications and to the satisfaction of the Contracting Officer and the Department of Public Works and Parks.

Items 505 through 508 shall conform to specifications on file for "Retroreflective White and Yellow and Black Lead Free Waterborne Pavement Marking Materials" at the Department of Public Works and Parks and the contractor shall provide all labor, material and equipment for the complete application of the item as shown on the drawings and described in these specifications at the unit price and as shown in the proposal.

ITEM 505 4 INCH REFLECTORIZED WHITE LINE (WATERBORNE) LF

ITEM 506 4 INCH REFLECTORIZED YELLOW LINE (WATERBORNE) LF

ITEM 507 12 INCH REFLECTORIZED WHITE LINE (WATERBORNE) LF

ITEM 508 PAVEMENT ARROW/LEGEND REFLECTORIZED WHITE (WATERBORNE) EACH

A. ***MATERIALS***

The materials used for this section shall conform to the applicable portions of Section M7.01 Pavement Markings (MSSHB).

B. ***EXECUTION***

Surface Preparation – The pavement shall be dry and free of sand, grease, oil or other foreign substances. Bituminous concrete shall have been in place for at least 48 hours prior to paint application.

Application – In accordance with the Manufacturer's Specification and with good painting practices, markings shall be applied at locations and at specified dimensions as designated on the drawings.

All applicable requirements of Section 860 (MSSHB) shall be met for work in this section.

Protection – The Contractor shall protect pavement markings until sufficiently dry to bear traffic. Cones or like barriers shall be used to protect markings.

C. ***MEASUREMENT AND PAYMENT***

Item 505, 506, and 507 are paid for by the linear foot. Item 508 shall be paid for per each. The price shall include all work necessary to successfully perform all tasks associated with these specifications and to the satisfaction of the Contracting Officer and the Department of Public Works and Parks. Texturized Synthetic Pavement shall be paid for at the Contract unit price per square yard in place, which price shall include all labor, materials, equipment and incidental costs required to complete the work as described above and to the satisfaction of the Engineer.

Sawcutting and milling of the asphalt pavement will be considered incidental to this item.

No separate payment will be made for the preparation of the “mock up”, shop drawings or attendance of the manufacturer's representative during construction. All costs in connection therewith shall be included in the unit price bid.

ITEM 509 BICYCLE LANE SYMBOL WITH ARROW OR SHARROW (DECAL) EACH

A. ***MATERIALS***

The materials used for this section shall conform to the applicable portions of Section M7.00.0 Pavement Markings (MSSHB).

B. ***EXECUTION***

SURFACE PREPARATION

The pavement shall be dry and free of sand, grease, oil or other foreign substances. Bituminous concrete shall have been in place for at least 48 hours prior to paint application.

APPLICATION

In accordance with the manufacturer's specification and with good painting practices, markings shall be applied at locations and at specified dimensions as designated on the drawings.

All applicable requirements of Section 860 (MSSHB) shall be met for work in this section.

PROTECTION

The Contractor shall protect pavement markings until sufficiently dry to bear traffic. Cones or like barriers shall be used to protect markings.

C. ***MEASUREMENT AND PAYMENT***

Item 509 shall be paid for per each. The price shall include all work necessary to successfully perform all tasks associated with these specifications and to the satisfaction of the Contracting Officer and the Department of Public Works and Parks.

ITEM 510 VIDEO DETECTION SYSTEM

A. ***GENERAL***

This specification sets forth the minimum requirements for a system that detects vehicles on a roadway using only video images of vehicle traffic. The contractor shall be responsible for the complete installation of the video system. The City Traffic Engineer shall determine the placement of the video detection camera.

System Hardware: The video detection system shall consist of one to four video cameras, isolated amplifier for each video cabling or video detection rack, an automatic control unit (ACU) and a pointing device.

System Software: The system shall include the latest software that detects vehicles in multiple lanes using only the video image. Detection zones shall be defined using only a video menu and a pointing device to place the zones on a video image. Up to 24 detection zones per camera shall be available.

Functional Capabilities: The ACU shall process video from one source. The source can be a video camera or videotape player. The video shall be input to the ACU in RS170 format and shall be digitized and analyzed in real time. The ACU shall detect the presence of vehicles in up to 24 detection zones per camera. A detection

zone shall be approximately the width and length of one car. Detector zones shall be programmed via a menu displayed on a video monitor and a pointing device connected to the ACU. The menu shall facilitate placement of the detection zones. A separate computer shall not be required for programming detection zones.

As an option, programming the system shall be available with a computer. Using a RS-232 communication link, the following capabilities shall be available as a minimum:

1. Continuous or single video snapshots. The user shall be able to select both the resolution and quality of the image.
2. Remote detection zone setup
3. Detector File upload/download
4. Ability to store the snapshot image
5. Security Protection to Prevent Unauthorized Remote Access

The ACU shall store up to three different detector zone patterns. The ACU can switch to any one of the three different detector patterns within 1 second of user request via menu selection with the pointing device. The ACU shall detect vehicles in real time as they travel across each detector zone. The ACU shall have an RS232 port for communications with an external computer. The ACU shall accept new detector patterns from an external computer through the RS-232 port when that computer uses the correct communications protocol for downloading detector patterns. The ACU shall send its detector patterns to an external computer through the RS-232 port when requested when that computer uses the correct communications protocol for uploading detector patterns.

Vehicle Detection: A minimum of 24 detection zones shall be supported and each detection zone can be sized to suit the site and the desired vehicle detection region. A single detection zone shall be capable to replace multiple loops and detection zone may be ANDed or ORed together to indicate vehicle presence on a single phase of traffic movement.

Placement of detection zones shall be done by using only a pointing device and a graphical interface built into the ACU to draw the detection zones on the video image from each video camera and shall be done by the contractor. Up to 3 detection zone patterns shall be saved within the ACU memory and this memory shall prevent loss during power outages. The selection of the detection zone pattern for current use shall be done through a menu. It shall be possible to activate a detection zone pattern for a camera from ACU memory and have that detection zone pattern displayed within 1 second of activation. When a vehicle is detected crossing a detection zone, the detection zone will flash a symbol on the screen to confirm the detection of the vehicle.

Detection shall be at least 98% accurate in good weather conditions and at least 96% accurate under adverse weather conditions (rain, snow, or fog). Detection accuracy is dependent upon site geometry, camera placement, camera quality and detection zone location, and these accuracy levels do not include allowances for occlusion or poor video due to camera location or quality.

The ACU shall provide up to 8 channels of vehicle presence detection through a NEMA TS1 port. The ACU shall provide DZR to enable normal detector operation of existing zones except the one being added or modified during the setup process. The ACU shall output a constant call on any detection channel corresponding to a zone being modified.

Detection zones shall be directional to reduce false detections from objects traveling in directions other than the legal direction of travel in the detection area. Detection zone setup shall not require site specific information such as latitude and longitude to be entered into the system.

ACU Hardware: The ACU shall be housed in a durable metal enclosure suitable for shelf mounting in a NEMA type traffic equipment cabinet, or attaching to the side rails of a Type 170 traffic equipment cabinet. The ACU enclosure shall not exceed 7.1" height, 2" width, and 6.2" depth. The ACU shall operate satisfactorily in a temperature range from -34C to +74C and a humidity range from 0%RH to 95%RH, non-condensing. The ACU shall be powered by 24 volts dc.

The ACU shall be equipped with surge suppression. Surge ratings shall be as set forth in NEMA specifications. ACU power consumption shall not exceed 10 watts. The ACU shall include a RS232 port for serial communications with a remote computer. This port shall be a "D" subminiature connector on the front of the ACU. The ACU shall utilize flash memory technology to enable the loading of modified or enhanced software through the RS232 port and without modifying the ACU hardware. The ACU shall include a port for transmitting up to 8 channels of detection to a traffic controller. This port shall be a D subminiature connector on the front of

the ACU. The front of the ACU shall include detection indications for each channel of detection that display detector outputs in real time when the system is operational. The front of the ACU shall include one BNC video input connection suitable for RS170 video inputs. The video input shall include a switch selectable 75 ohm or high impedance termination to allow camera video to be routed to other devices, as well as input to the ACU for vehicle detection. The front of the ACU shall include one BNC video output providing real time video output which can be routed to other devices. The video input to the ACU shall include external transient voltage suppression and isolation amplification that shall assure the 1volt peak to peak video signal integrity is maintained despite video cabling losses and externally induced transients. All video image processing shall be performed in the ACU, which shall be located within the traffic control cabinet.

Camera: The video camera used for traffic detection shall be furnished by the ACU supplier and shall be qualified by the supplier to ensure proper video detection system operation.

The camera shall produce a useable video image of the bodies of vehicles under all roadway lighting conditions, regardless of time of day. The minimum range of scene luminance over which the camera shall produce a useable video image shall be the minimum range from night time to day time, but not less than the range 0.1 lux to 10,000 lux. The camera shall use a CCD sensing element and shall output monochrome video with resolution of not less than 350 lines vertical and 500 lines horizontal. The camera shall include auto-iris control based upon average scene luminance and shall be equipped with an auto-iris lens. The camera shall include a variable focal length lens with variable focus that can be adjusted, without opening up the camera housing, to suit the site geometry. The lens iris shall be adjusted to minimize image variations. The camera electronics shall include AGC to produce a satisfactory image at night.

The camera shall be housed in an environmentally sealed enclosure. The camera enclosure shall be equipped with a sun shield that prevents sunlight from directly entering the lens. The sunshield shall include a provision for water diversion to prevent water from flowing in the cameras field of view. The camera enclosure with sunshield shall be less than 6" diameter, less than 26" long, and shall weigh less than 12 pounds when the camera and lens are mounted inside the enclosure. The camera enclosure shall include a thermostatically controlled heater to assure proper operation of the lens iris at low temperatures and prevent moisture condensation on the optical faceplate of the enclosure. When mounted outdoors in the enclosure, the camera shall operate satisfactorily in a temperature range from -34□C to +55□C and a humidity range from 0% RH to 100% RH. The camera enclosure shall be equipped with separate, weather-tight connections for power and video cables at the rear of the enclosure to allow diagnostic testing and viewing of video at the camera while the camera is installed on a mast arm or pole. Video and power shall not be connected with the same connector.

The camera shall be powered by 120 VAC 60 Hz. Power consumption shall be less than 40 watts under all conditions.

Recommended camera placement shall be 33 feet (or 10 meters) above the roadway, and over the traveled way on which vehicles are to be detected. The camera shall view approaching vehicles at a distance not to exceed 350 feet for reliable detection.

The video signal output by the camera shall be in RS170 format. The video signal shall be fully isolated from the camera enclosure and power cabling.

Installation: The coaxial cable to use between the camera and the cabinet shall be a 75 ohm, precision video cable with 20 gauge solid bare copper conductor (9.9 ohms/M), solid polyethylene insulating dielectric, 98% (min) tinned copper double-braided shield and black polyethylene outer covering. The signal attenuation shall not exceed 0.78 dB per 100 feet at 10 MHZ. Nominal outside diameter is 0.304 inches. This cable shall be suitable for installation in conduit or overhead with appropriate span wire. BNC plug connectors should be used at both the Camera and Cabinet ends. The coaxial cable, BNC connector and crimping tool shall be approved by the supplier of the video detection system and the manufacturer's instructions must be followed to ensure proper connection.

The power cabling shall be 16 AWG three conductor cables. The cabling shall comply with the National Electric Code, as well as local electrical codes.

The video detection system shall be installed as recommended by the supplier and as documented in installation materials provided by the supplier. To assure proper operation in a variety of environments, the video detection system supplied shall have been operational for at least 3 months with at least 3 different customers in 3 different states.

Warranty: The video detection system shall be warranted to be free of defects in material and workmanship for a period of two years from date of shipment from the supplier’s facility. During the warranty period, the supplier

shall repair with new or refurbished materials, or replace at no charge, any product containing a warranty defect provided the product is returned FOB to the supplier's factory or authorized repair site. Product repaired or replaced under warranty by the supplier will be returned with transportation prepaid. This warranty does not apply to products damaged by accident, misuse, abuse, improper operation, service by unauthorized personnel, or unauthorized modification.

In recognition of the substantial influence on video detection performance exerted by the quality of the physical installation, including selection of locations for cameras as well as cabling and connector integrity, no warranty of merchantability or fitness for purpose is made for the video detection system. Under no circumstances shall supplier be liable for any loss or damage, whether direct, indirect, special, incidental, or consequential, to the contracting agency or any third party arising out of the use or inability to use the products.

The foregoing warranties are expressly made in lieu of all warranties expressed or implied and are the sole remedy of customers.

During the warranty period, technical support shall be available from the supplier via telephone within 4 hours of the time a call is made by a user, and this support shall be available from factory certified personnel or factory-certified installers. During the warranty period, updates to ACU software shall be available from the supplier without charge.

Maintenance and Support: The supplier shall maintain an adequate inventory of parts to support maintenance and repair of the video detection system. These parts shall be available for delivery within 30 days of placement of an acceptable order at the supplier's then current pricing and terms of sale for said parts. The supplier shall maintain an ongoing program of technical support for the video detection system. This technical support shall be available via telephone, or via personnel sent to the installation site upon placement of an acceptable order at the supplier's then current pricing and terms of sale for on site technical support services.

B. ***MEASUREMENT AND PAYMENT***

The contract unit price per single video detection shall include full payment for all labor and materials to provide a complete detection zone. The actual length of wire shall not be considered in any measurement. The cost of the continuous wire extending from the camera to the controller cabinet shall be included in the unit price. The video connections and amplifier shall be included in the unit price.

ITEM 511 WIRE LOOP INSTALLED IN ROADWAY SD4.041

A. ***GENERAL***

This item shall include all insulated wire embedded in the bituminous concrete pavement and other surfaces and the wire inserted in the 1-1/2 inch PVC conduit leading from the roadway to the manhole. Also included are all labor, tools, materials and other equipment necessary to install the loop completely in place and operative. The electronic equipment to which the loop must connect to from an operating vehicle presence detection device is not included in this item. All loops shall have two turns of wire. All loop detector beldin wire from the controller to the pullbox shall be replaced. Each loop shall have a separate lead wire to the pull box, with each having a separate sweep. Additional pull boxes and conduit may be necessary to complete the wire loop installation. No core drilling thru the curb will be allowed.

B. ***MATERIALS***

Loop detector wire shall be No. 14 AWG stranded with 600 volt THHN cross-linked polyethylene insulation. Loop wire shall be protected by a flexible, vinyl plastic tubing of 3/16 inch ID, a minimum of 1/32 inch wall, and 1/4 inch O.D.

C. ***BITUMINOUS CONCRETE PAVEMENT***

The actual configuration of the loops shall be as dimensioned on the Traffic Control Location Plans and Traffic Signal Detail Plans. The Contractor shall mark the loop location on site, and request the Contracting Officer's inspection and approval before the Contractor proceeds with the installation work.

D. ***CUTTING SLOTS***

Slots in the bituminous concrete binder course shall be cut with a concrete sawing machine to a uniform depth as shown in the Traffic Detail Plans and as required to accommodate all necessary loop turns or leads. Diagonal saw cuts of at least 12 inches in length shall be made at each corner to prevent sharp bends in the wire. The diagonal cuts shall overlap the main cuts so that each wire-bearing slot has full depth. Drilled corners are optional.

E. *SEALING OF SLOTS*

The pavement slots for bituminous concrete pavements shall be filled with approved embedding sealer strictly in accordance with the directions of the manufacturer. The sealer shall be specifically recommended by the manufacturer for use in new and existing bituminous concrete pavements.

F. *PAVEMENT JOINTS OR CRACKS*

Loop wires crossing pavement joints or noticeable cracks shall be protected with an approved insulating sleeve continuously for at least six inches each side of the joint or crack. The objective is to prevent bonding of the wire to the pavement. The ends of the sleeving material shall be taped to prevent entry of slot sealing compound into the sleeving. Said sleeving shall be furnished and installed at no extra cost and shall be incidental to the induction loop item. The end of the 1-1/2 inch PVC conduit shall be plugged with an approved material, and loop ends shall be sleeved as for cracks.

G. *TESTING OF LOOPS*

No splice shall be used in the installation of any induction loop or its lead-in wire to the appropriate hand-hole. The following test procedures shall be performed by the Contractor in the presence of the Contracting Officer after installation as, detailed below. The cost of equipment, labor and materials to perform such testing and similar retesting following repairs, replacement, or adjustment of any detector shall be at no additional cost above the total sum bid for each individual traffic signal control item.

After installation of wire loop vehicle detectors in the roadways and installation of loop connected leads to the controller cabinet each loop and lead-in combination shall be tested for proper installation. If any loop and lead-in combination fails to pass any one of the five following tests it shall be repaired and then retested.

1. The DC resistance from lead to lead of the same loop shall not exceed 3 ohms as measured by a high quality battery powered voltage ohm meter.
2. A megohm (megger) test at 500 V DC or greater, shall be made between lead-in shield and the earth ground rod. The resistance shall not be less than 100 megohms.
3. The two leads of a loop shall be temporarily spliced together and a similar megger test made between the leads and the earth ground rod. This resistance shall not be less than 100 megohms.
4. The two leads of a loop shall be temporarily spliced together and a similar megger test made between the leads and the lead-in shield. This resistance shall not be less than 100 megohms.
5. The inductance shall be 50 - 700 microhenries.

H. *MEASUREMENT AND PAYMENT*

For bituminous concrete payment all main saw cuts shall be measured for payment. Limits of measurement shall be the intersection of main saw cuts to the centerline of the end of 1-1/2 inch conduit used for lead-in wires. Diagonal cuts shall not be measured.

The contract unit price per linear foot of induction loop as measured shall include full payment for all sawing, loop joint, wire, sealing, etc. The actual length of wire shall not be considered in any measurement. The cost of the continuous wire extending into the hand-hole shall be included in the unit price. Payment for loop lead-in cable shall be incidental to the cost of the wire loop and included under this item.

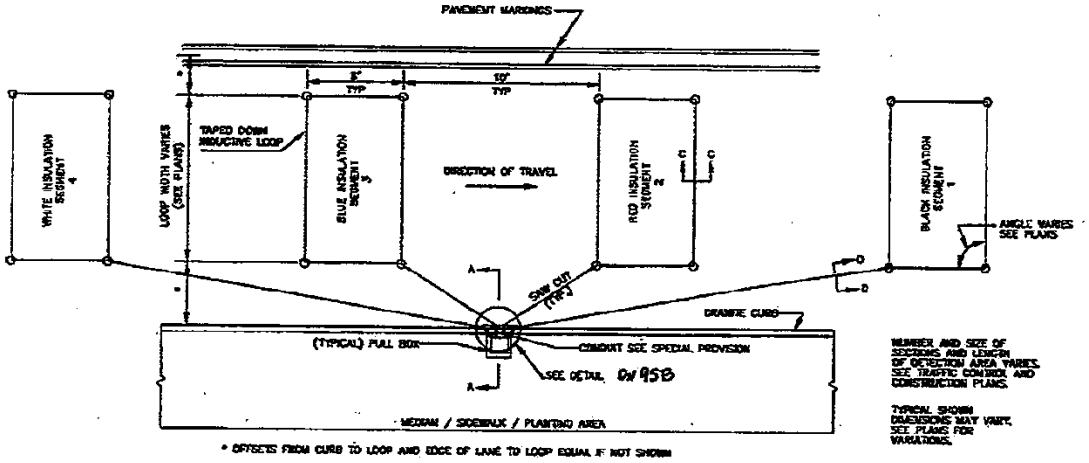

PLAN OF SEGMENTED DETECTOR DETAIL

NOT TO SCALE

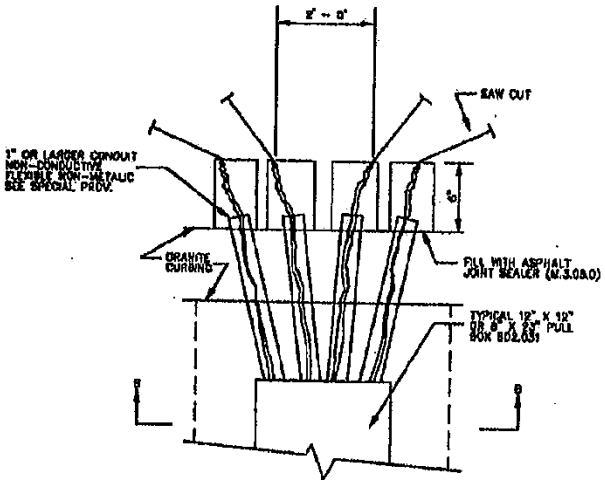

DETAIL – PLAN VIEW

NOT TO SCALE

ITEM 512 PULL BOX 8"X23" (SD2.030)

ITEM 513 PULL BOX 12"X24" (SD2.031)

A. ***GENERAL***

Work to be done under these items shall conform to the relevant provisions of Section 800 (MSSHB) and the following:

The 8"x23" pull boxes shall have the word "W.D.P.W." stamped on the covers; the 12"x24 " pull boxes shall have "TRAFFIC" stamped on the covers and be used only for the interconnection cable.

B. ***MEASUREMENT AND PAYMENT***

The pay item for this work shall be Pull Boxes (complete in place) including all excavation, trimming or cutting of existing concrete or bituminous concrete, backfill, and placing of concrete or bituminous SUPERPAVE bituminous concrete collar. All labor, equipment, tools, and incidental expenses required to locate, maintain in proper working order, and set to finish grade.

ITEM 519 MOBILE LIGHTED VARIABLE MESSAGE BOARD

A. ***GENERAL***

All message boards shall conform to NEMA TS 4-2005 Section 2 and MUTCD specifications. All boards shall have at a minimum three lines of available text and be able display a minimum of three different screens. Deployment of the message board(s) will be at the direction of the contracting officer. All boards must have the ability to be programmed in the field. All messages to be displayed will be approved by the contracting officer prior to deployment.

Additional time required for the boards to remain on site, due to the contractor's schedule, will result in non-payment for those days. The boards will remain in place, operational and maintained, until the top course of asphalt is complete.

B. ***MEASUREMENT AND PAYMENT***

Payment for the item shall be paid per day for each board while in use.

ITEM 520 WARNING AND REGULATORY SIGNS

A. ***GENERAL***

All traffic signs must conform to the 2003 Manual of Uniform Traffic Control Devices (for Conventional Roads) and the MHD Standard Specifications for Highways and Bridges for type and size.

All regulatory and warning signs shall conform to the MUTCD specifications for size and type. Regulatory and warning signs shall be 0.08" aluminum with high intensity prismatic reflective sheeting. Parking signs shall be engineer-grade retro-reflective sheeting on 0.08" aluminum. WRTA bus stop signs, when applicable, will be provided to the Contractor. Signs that have been removed for replacement shall be delivered to the Street Operations Traffic Division at 26 Albany Street.

Special "Private Street Dangerous" and "Not a Thru Street" blades are 6" aluminum extruded with 3" all uppercase letters, with the same materials used for street name blades.

B. ***MEASUREMENT AND PAYMENT***

Payment for this item shall be paid per each.

ITEM 521 TYPE "A" STREET NAME SIGNS

A. ***GENERAL***

Type "A" street name sign blades (used exclusively on traffic signal mast arms) shall be 12" aluminum rounded corner sign blades with 8" uppercase and 5.5" lowercase lettering (Colors: scotch lite white for letters and 0.5" border, green background). The font shall be Times New Roman with a width factor of between 0.5 and 0.7. In no event shall the length of the sign exceed 72". In special cases of long street names, alternate abbreviations or exceptions to the font width factor may be granted by the Director of Engineering. Type "A" signs shall contain a 7.5" solid red heart with 0.25" silver border positioned before the street name verbiage with block number located in the upper right corner of the street name sign. The name suffix shall be 4" high, located in

the lower right corner of the sign, and abbreviated (St, Rd, Ave, Blvd, Ct, Pkwy, Cir, etc.). All signs shall be single sided and all materials covering the sign blade and all letters shall be high intensity grade material.

B. ***METHOD OF CONSTRUCTION***

Type “A” signs shall be mounted to mast arms or signal masts with stainless steel banding, buckles, brackets, and bolts.

C. ***MEASUREMENT AND PAYMENT***

Payment for this item shall be paid per each.

ITEM 522 TYPE "B" STREET NAME SIGNS

A. ***GENERAL***

Type "B" street name sign blades shall be 9" aluminum extruded sign blades with 6" uppercase and 4.5” lowercase letters (Colors: scotch lite white for letters, green background). The font shall be Times New Roman with a width factor of between 0.5 and 0.7. In no event shall the length of the sign exceed 48”. In special cases of long street names, alternate abbreviations or exceptions to the font width factor may be granted by the Director of Engineering. A red 5” heart with a 0.25” silver border shall be placed before the street name. The name suffix shall be 3” high and abbreviated (St, Rd, Ave, Blvd, Ct, Pkwy, Cir, etc.). All signs shall be doubled sided and all materials covering the sign blade and all letters shall be high intensity grade material.

B. ***METHOD OF CONSTRUCTION***

All hardware for Type "B" signs shall be aluminum cantilever side mounts or aluminum post caps for top mounts. The Contractor is responsible to provide stainless steel banding, brackets, buckles and bolts for the installation of such materials. All banding material shall be 1/2".

C. ***MEASUREMENT AND PAYMENT***

Payment for this item shall be paid per each.

HEART DETAILS

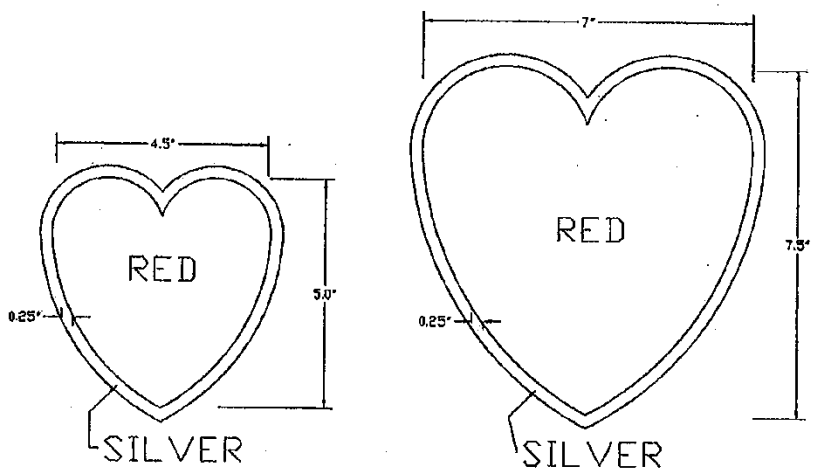

ITEM 523 TRAFFIC SIGN POLES

A. *GENERAL*

All traffic sign poles shall be Schedule 40 black iron pipe with an aluminum industrial coating so the pipe can be reheated for straightening. The size of the pipe shall be 12’ long x 2" I.D. round. All poles shall be painted with gloss black rust inhibitive enamel.

B. *METHOD OF CONSTRUCTION*

All traffic sign poles shall be installed in a 12" x 12" cement concrete foundation, with a minimum depth of 2.5 feet. This installation process shall be used for all types of bituminous concrete sidewalks or loam borders. In cement concrete sidewalks the Contractor shall install pre-molded bitumastic filler. The traffic sign pole shall be centered in the foundation with a minimum of 7'-0" distance from the finished surface to the bottom of the sign and not less than 18" from the edge of the curbing. Poles that have been removed for replacement shall be disposed by the Contractor.

If warning and regulatory and/or type “B” signs are to be reused on a new pole, under this item, those signs will be reinstalled on the new traffic pole at no cost to the City of Worcester.

C. *MEASUREMENT AND PAYMENT*

Payment for this item shall be paid per each.

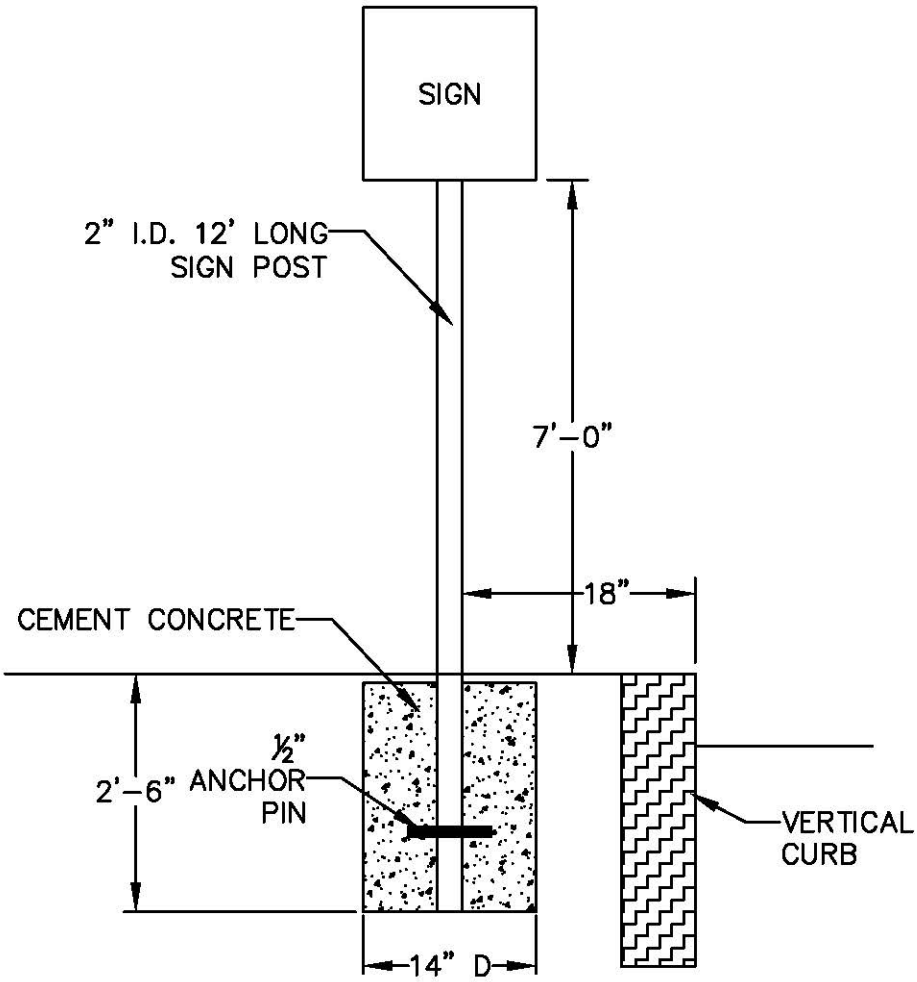

12' SIGN POLE INSTALLATION

ITEM 524 PARKING METER POSTS

A. *GENERAL*

All standard parking meter posts shall be 2–inch I.D. Schedule 40 black iron pipe with an aluminum industrial coating so the pipe can be reheated for straightening and painted gloss black rust inhibitive enamel. The length of the pipe shall be five (5) feet.

B. *METHOD OF CONSTRUCTION*

All parking meter poles shall be installed with a 14” diameter, 20” deep cement concrete foundation, anchored with a 1/2 inch diameter, 6 inch long reinforcing bar at a minimum depth of twelve (12”) inches (see plan). A 3/8” diameter weep hole shall be drilled in the meter pole approximately 18” above ground level. This installation process shall be used for all types of bituminous concrete sidewalks or loam borders. In cement concrete sidewalks the contractor shall install pre-molded bitumastic filler. The parking meter pole shall be centered in the foundation, and positioned 18” from the face of the curb unless otherwise specified. Poles that have been removed for replacement shall be disposed by the Contractor. All poles shall be painted with gloss black rust inhibitive enamel.

C. *MEASUREMENT AND PAYMENT*

Payment for this item shall be paid per each.

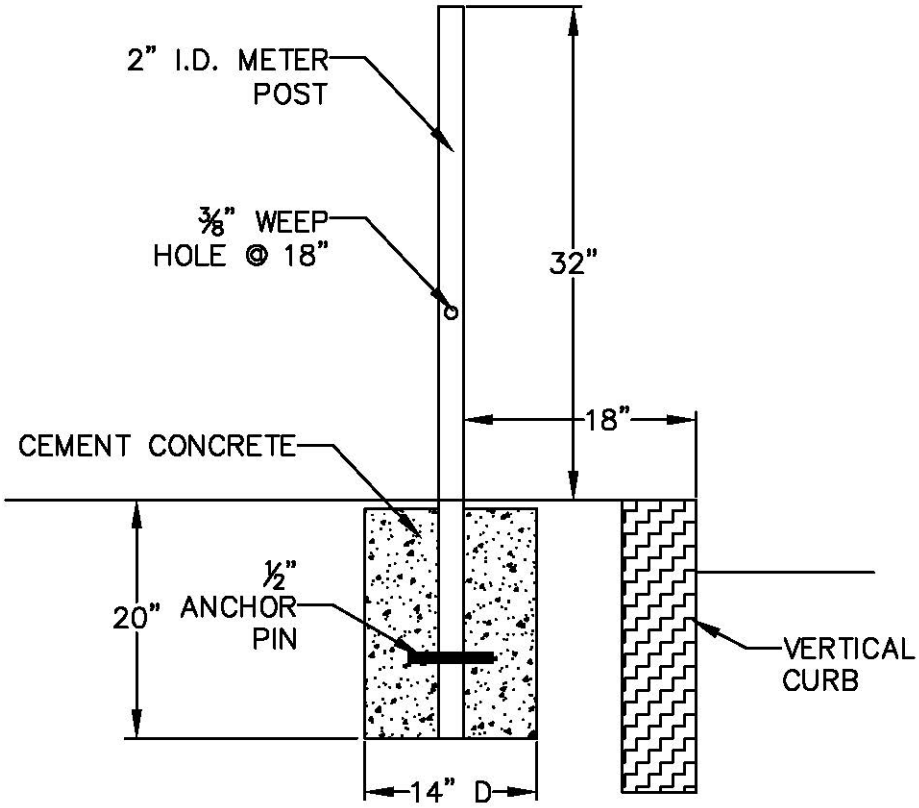

PARKING METER POLE INSTALLATION

ITEM 526 PARKING METERS

A. ***GENERAL***

All parking meters shall be fully electronic with solid-state components, excluding the enforcement signal display. There shall be no handles to turn, no thumb slides to push and be powered by 9V alkaline or lithium battery. Each component and the entire assemblage must be capable of operating without failure in the City of Worcester's urban environment across a temperature range of minus 40 to plus 185 degrees Fahrenheit in rain, snow, ice, sleet, street grime and vibrations. All parking meters furnished shall be of single design and shall be capable of recognizing both a rechargeable/refundable debit card (stored value chip card) and coinage or tokens simultaneously. The meter must be capable of accepting all US currency coins, custom manufactured tokens. The meter shall contain an electronic mechanism to accept an optional Park Card in the future, with the com/Park card entrance area sitting flush in the face of the upper housing for maximum vandal resistance. Each meter and appurtenance offered shall be manufactured from new unused materials and components. Materials strengths, hardness, durability and corrosion resistance shall be appropriate to its intended application.

Electronic parking meters shall feature a 4-digit liquid crystal display on the front of the meter capable of registering paid parking time tilted upward for maximum user visibility. Minutes and seconds (or hours and minutes) shall be separated by a colon that flashes in one-second beats. A simple means for determining malfunction shall be programmed to show on the LCD. Available icons or messages may include FAIL, LOW, ERR, JAM, OFF, STOP, or abbreviation that can be made with four 7-segment digits. Additionally, the words "Out of Order" shall appear at the top of the LCD display when the mechanism is in failure mode.

The rear display shall be a rotary status indicator that is visible from a distance of at least 70 feet, not affected by angle of view, window glare or low light conditions. When time is registered on the electronic meter, the status indicator shall show bright green. When time is expired, the status indicator shall show the word "EXPIRED" on a bright red background. A yellow status indicator shall appear to indicate when the meter is in jam/error mode. The rotary status indicator shall be driven by a low-power stepper motor with magnified windows on either side of the front digital display to allow frontal viewing of the rotary status signal for enforcement purposes.

The coin chute shall be free fall to prevent jams and ensure consistent coin detection. Coin discriminator shall incorporate no contact points, which are sensitive to grime and moisture. Washer or spurious coins shall not register time. The chute shall incorporate an anti-backup method to prevent retrieval of coins, which shall remove the time from the meter it initially purchased. Standard programming shall include automatic temperature compensation to ensure accurate coin discrimination at varying temperatures. Coins are detected by size and metallic content via dual RF coil configuration.

The time and rate structure shall be pre-programmed to the City of Worcester's specifications prior to shipment from the factory and shall be programmed thereafter by the City or factory authorized personnel through the use of rate conversion software and accessories. Electronic meters may be programmed for a variety of rate structures, including:

Fixed Rate: same rate all day, every day. This shall include minimum time, non-cumulative operation and one split based on amount of time purchased. Audit reports shall include analysis by coin type.

Multi-Rate: up to 6 rate changes a day including Meter Off, No Parking, or Free Parking modes, with a weekday rate, Saturday rate and up to 10 holiday or special event rates. Multi-rate definition may allow or disallow buying from one rate period into another, and may include negative time. Audit reports shall include the option of an analysis of up to 8 different user-defined time periods.

The electronic meter shall consist of modular components that can be easily separated for quick repair or replacement. The coin chute, rotary status indicator and EPROM shall be simply plugged into the time module unit and changeable within five minutes. Coin jams are to be easily cleared without tools in a matter of seconds.

Changing EPROM or battery shall not cause audit data to be lost. The meter shall be equipped with an indefinite non-volatile memory. Coin chutes shall be interchangeable between mechanisms without having to "train" the meter with gauge coins. Electronic components shall be tested by "burn-in" technology prior to delivery to the City of Worcester.

Each meter shall be supplied with a removable rate card displayed in the meter window. The rate card shall be printed to show the specific meter rate as specified by the City at the time of the order. Each order shall have an additional 100 blank plates for rate changes to be determined by the City.

Each electronic mechanism shall be capable of sending and receiving data from a handheld, external communicator accessory manufactured specifically for the use with the electronic parking meters and meter-management/audit software to be provided by the Contractor. The manufacturer of the meter software shall provide all future generic software upgrades at no additional cost to the City of Worcester. The communicator transmits information by an infrared wand attached to the communicator by a horseshoe shaped channel molded onto the front lens, quickly transmitting data via infrared send/receive terminals on the face of the mechanism. Retrieval and/or reprogramming of time and rate structure, retrieving audit information, retrieval of battery charge, assignment of serial numbers, retrieval of mechanism serial number and updating meters real time clock. Program changes and upgrades may also be directly uploaded to the mechanism through the auxiliary port.

Upper meter housing shall be fabricated from high-grade die-cast aluminum with a minimum tensile strength of 65,000 psi and finished dark gray on both the interior and exterior to withstand a five hundred hour salt spray test without corrosion failure. Housing strengths shall be capable of withstanding normal wear and tear, as well as the impact of hand held tools to discourage vandalism and forced entry. The mechanism door opens to a horizontal position, providing a convenient work shelf for on-street maintenance. Pressure type mechanism door lock provides infinite adjustment to take up gasket wear and tear from years of proper sealing when the door is closed. The door can be easily removed without the use of tools by disengaging two lock pins. The hinge is completely concealed to prevent vandalism.

The meter shall be attached to a 2-inch I.D. round pipe post with a self-adjusting, three-piece wedge assembly. Access is possible only when the door is unlocked and open. Special “Gripper Wedges” shall be provided to secure the meter into the post if forced removal is attempted.

Warranty: All items furnished shall be free from defect in design, material and workmanship for a minimum period of one year from the date of placement in operation. In the case of meter mechanisms, the date of operation shall be determined from the date of in-service registration to the City of Worcester’s database. In the case of the meter power source, the length of the guarantee period shall be the certified life expectancy of the meter power source determined from the date of in-service registration on the City’s database. All items or components parts found to be defective or inoperative during the guarantee period shall be promptly replaced without cost to the City. In the event the defective parts are not replaced promptly, the City reserves the right to replaced the defective materials and subtract the cost or the replacement and revenue lost from the final cost of the contract.

B. ***SINGLE VAULT METER ASSEMBLY***

Each meter housing shall be equipped with separate locked coin box for use in the coin compartment section of the parking meter. The coin box shall be linear type that has been designed specifically for the security coin box and employs the use of four gears, which are actuated individually by means of a four-sided, rack-type linear key. The coin box shall be designed as part of a sealed collection system whereby the collector has no access to coinage. The coin box shall be equipped with a non-standard heavy duty locking mechanism and key series shall be part of a secure and limited access system available only through the manufacture of the parking meters.

C. ***MEASUREMENT AND PAYMENT***

The work under Item 526 Parking Meters will be paid per each installed, complete in place.

ITEM 530 POLE PAINTING

A. ***LABOR SPECIFICATIONS***

1. The Contractor is to supply all labor and materials including paint, brushes, rollers, scrapers or other materials needed to adequately paint the City poles (Spray cans will not be allowed).
2. Brush and any other debris will be removed from around the pole to an approximate 2-foot radius around the pole if required. Any brush, rollers and debris to be debris to be disposed of will be placed in the back of the truck and disposed of by the Contractor at his expense in an approved manner.
3. A “skirt” or other type of covering shall be laid on the ground around the base of the pole to prevent paint from splattering on the ground or sidewalk.
4. Any loose paint will be scrapped from the pole using a wire brush. Paint chips will be cleaned or removed from around the pole.
5. The paint to be used will be a glossy black rust inhibitive enamel.

6. Painting will only be done under temperature and/or weather conditions as per the recommendations of the paint manufacturer.
7. All left over paint, paint cans or painting supplies such as brushes, rollers and rags shall be disposed of by the Contractor at his expenses in a pre-approved manner that complies with all regulations pertaining to hazardous materials.

B. ***MEASUREMENT AND PAYMENT***

The work under this item will include all materials and labor necessary to complete the work as specified herein. The pay item will be paid per each.

SECTION 600 - TRAFFIC SIGNAL EQUIPMENT

SCOPE OF WORK

The work under these items consists of furnishing and installing traffic control equipment, the controller and cabinet, signal heads, signal posts or mast arms, anchor bolts and foundations, service connection, wire and cable, pavement markings and all incidental materials necessary for operating and controlling the traffic control signals as shown on the plans. All work shall conform to the provisions of the City of Worcester's Specifications and the latest revisions of the Massachusetts Standard Specifications for Highways and Bridges Section 800 of the MSSHB and the latest edition of the Manual on Uniform Traffic Control Devices. The contractor is responsible for researching all existing utilities through Dig Safe.

All work done under these specifications shall be in conformance with Section 800 of the MSSHB STANDARD SPECIFICATIONS FOR HIGHWAY AND BRIDGES dated 1988, the SUPPLEMENTAL SPECIFICATIONS, dated November 30, 1994, the 1977 CONSTRUCTION STANDARDS, the 1990 STANDARD DRAWINGS FOR SIGNS AND SUPPORTS, the 1968 STANDARD DRAWINGS FOR TRAFFIC SIGNALS AND HIGHWAY LIGHTING and the AMERICAN STANDARDS FOR NURSERY STOCK (ANSI-Z60.1-1990), as amended, the PLANS, and these SPECIAL PROVISIONS

The payment clauses contained in the Section 800 of the MSSHB Standard Specifications do not apply to these special provisions.

The General Conditions, Supplementary Conditions and Special Provisions shall take precedence over the General Requirements of Division I of the Section 800 of the MSSHB Standard Specifications.

PLANS

(Supplementing Section 800 of the MSSHB Subsection 5.02)

The Contractor shall furnish "AS BUILT" plans of the completed project to the City of Worcester's Commissioner of Public Works or his authorized representative. These "AS BUILT" plans shall be furnished prior to the date of final acceptance. The Contractor shall furnish all AutoCAD drawing files to the City of Worcester Commissioner of Public Works or his authorized representative, related to the project. All AutoCAD files shall be set to the State Plane Coordinate System or the City will provide a copy of the City Map for the contractor to insert the "AS Built" information on a separate layer.

BUY AMERICA PROVISIONS (23 CFR 635.410)

(Supplementing Section 800 of the MSSHB Subsection 6.01 Source of Supply and Quality)

All steel and iron must be produced in the United States. The determination of foreign or domestic character will be based on the place of manufacturer and the origin of more than fifty percent of its components. Foreign steel can be used if the cost of materials does not exceed 0.1% of the total contract costs or $2,500 whichever is greater. The action of applying a coating to covered material (i.e., steel and iron) is deemed a manufacturing process subject to Buy America. Coating includes epoxy coating, galvanizing, painting and any other coating that protects or enhances the value of a material subject to requirements of Buy America.

PROVISIONS FOR TRAFFIC AND PROSECUTION OF WORK

(Supplementing Section 800 of the MSSHB Subsection 8.02)

Before starting work under this contract, the Contractor shall prepare and submit to the City's Traffic Engineer for approval, a plan (based on the Contractor Traffic Management Plan) that indicates the traffic routing proposed by the Contractor during the various stages and time periods of the work and the temporary barricades, signs, drums and other traffic control devices to be employed during each stage and time period of the work to maintain traffic and access to abutting properties.

With the approval of the City's Traffic Engineer, the Contractor may reduce the width of the roadway to one lane during working hours only if and when suitable detours or pavement width is available; however, two-way traffic shall be maintained on all sections at all times. Reasonable facilities shall be provided by the Contractor for the safe and convenient passage of vehicles and pedestrians through the project locations. Particular care shall be taken to establish and maintain such methods and procedures so as not to create hazardous conditions. "Stop and Go" operation of the existing traffic signal system shall be maintained at all times. Exceptions for short downtimes for splicing cable or modifying the controller are acceptable with approval from the City's Traffic

Engineer. The Contractor shall provide police control at the intersection when the "Stop and Go" operation must be discontinued for periods of more than one half hour (30 minutes).

It shall be a requirement by the City of Worcester that any installation of wiring done by the Contractor in the construction of this roadway will not be permitted unless installed by licensed electricians. The contractor shall employ, at the job site, only personnel with a minimum of two years of experience in technical traffic signal work or in the construction of traffic signals.

The contractor shall, without additional compensation be responsible to insure safe travel conditions throughout the construction zone and access to adjacent properties during the prosecution of the work. Any construction or regulatory signs within the construction signing limits shall be appropriate for the roadway conditions at all times. Any signs, the meaning of which is not consistent with the construction activity or travel lane configuration, shall be covered or removed. Temporary pavement markings shall be installed to designate all travel lanes at any time when barrels or cones do not otherwise designate the travel lanes. Traffic cones shall be removed at the end of each workday. At the end of each workday, the contractor shall review the construction zone to verify (and adjust if necessary) that the travel ways are unobstructed and clearly designated and that all signing is consistent with the traffic configuration and understandable by the drivers.

The Contractor shall provide access to all businesses at all times when the work is in a predominately retail and commercial business section of the City.

The Contractor shall provide safe and ready means of ingress and egress to all stores and shops, public and private and professional offices and any other businesses or residences in the project area, both day and night, for the duration of the project.

PAINTING OF SIGNAL EQUIPMENT

All new traffic signal equipment shall be powdered coated Black and as noted below

Vehicular signal housing	-	Black
Pedestrian signal housing	-	Black
Signal housing supports	-	Black
Signal support hardware	-	Black
Controller cabinet (exterior)	-	Black
Controller cabinet (interior)	-	White
Front of signal housing	-	Flat Black
Visors of signal housing	-	Black
Mast Arm ornamental Bases	-	Black
Mast Arm – Steel	-	Black
Octagon Traffic Signal Bases	-	Black

MAINTENANCE OF TRAFFIC SIGNALS

The Contractor shall provide all labor, equipment and materials required for total maintenance and emergency repairs of all existing and proposed temporary and permanent traffic signal control equipment, within the project limits, including damage by automobile accidents, unless otherwise specified under Subsection 7.17 "Traffic Accommodation" of the Section 7 of the MSSHB Standard Specifications, as amended, in which case Subsection 7.17 will govern. These provisions will apply to all signalized locations included as part of the Contract on the day that the Contractor will commence work on the project, until the date of acceptance of the completed project from the City of Worcester. This written notice must be given before the Contractor may proceed with any work on a specified traffic signal system. For the purpose of these paragraphs, the phrase "Traffic Signal Control Equipment" is intended to include, but not limited to, controllers, detectors, signal housing, support structures, cabinets, wires, conduit and all other auxiliary electrical equipment used for traffic control. In the event of damage caused by automobile accidents, the Contractor shall replace all damaged material with new material. The Contractor, installing the traffic signal equipment, will be required to service and maintain the traffic signal controllers and associated equipment, on a 24-hour basis, including Sundays and Holidays.

No separate payment will be made for maintenance of existing installation, and the removal and stacking of existing traffic signal equipment, including relocating the existing signal equipment to new foundations as a temporary setup. All costs in connection therewith shall be included in the lump sum price bid for Item 600.

No other Contractor will be allowed to service the traffic signal equipment other than the Contractor, who installed the traffic signal equipment, until the final acceptance by the City of Worcester. If the Contractor fails to provide maintenance to the traffic signal equipment during the duration of the project, the City has the right to dispatch their traffic signal contractor and bill the contracting contractor for payment of parts and labor. A reasonable time frame for repairs shall not exceed 24 hours.

The cost of maintenance of signals shall be deemed to be included in the various traffic signal Contract items and no additional payments will be made, except as provided under Subsection 7.17.

UNIT PRICES

The method of measurement and basis for payment for all work necessary to complete the items identified in the bid proposal shall be made in accordance to the itemized bid form contained in the bid proposal. The contractor shall be responsible for the prosecution of all necessary work in order to meet the time schedule requirements with no additional compensation therefore, other than as provided under the contract unit prices or lump sum payments for the various items scheduled in the proposal. The contractor shall have no claim for damages of any kind on account of any interruption, delay or suspension of the work affected by the above time schedule requirements.

ORDERING OF MATERIALS AND DRAWINGS

The Contractor shall provide the City of Worcester's Traffic Engineer, within 10 days of receipt of the contract, written evidence that:

1. He has ordered the shop drawings for the materials for which shop drawings are required to complete the work on the subject contract.
2. He has ordered the Traffic Control Devices for which shop drawings are not required and all necessary components to complete the work on the subject contract.

The Contractor shall submit shop drawings for all signal supports, a list of equipment, and manufacturer's equipment specifications to the City of Worcester's Traffic Engineer in accordance with the relevant provisions of Section 600. The Contractor will submit shop drawings and long hand calculations stamped by a Massachusetts Registered Structural Engineer for all mast arm assemblies. All traffic signal equipment must be on the most current Section 800 of the MSSHB Traffic Signal Approved Equipment List. **All traffic signal equipment must be in full compliance with the National Transportation Communications for Intelligent Transportation System (ITS) Protocol (NTCIP) 1201 and 1202 standards and capable of communicating with the City of Worcester Central Monitoring software.**

The Contractor shall further provide the City of Worcester's Traffic Engineer written evidence within 30 days of receipt of the Contract that these orders have been confirmed in writing by the manufacturer with delivery dates appropriate for timely completion of the project. These confirmations of orders will become part of the project records.

Failure to comply with any of the ordering requirements shall nullify a request for extension of the project completion date as a consequence of late delivery of traffic signal control devices or castings.

PROCEDURES FOR SHOP DRAWINGS

The following procedure shall be followed when making shop drawings for this project:

1. The Prime Contractor shall submit three (3) sets of drawings directly to the City of Worcester's Traffic Engineer for preliminary review.
2. The City's Traffic Engineer will send a written reply, returning two (2) sets to the Prime Contractor within five (5) working days of receipt of the drawings.
3. If the City's Traffic Engineer's reply indicates rejection or advises corrections or additions to the drawings, steps 1 and 2 are repeated until the City's Traffic Engineer indicates that approval will be given.
4. The Contractor shall then submit three (3) sets of drawings to the City's Traffic Engineer for approval and distribution.

5. Three (3) sets of wiring diagrams with both internal and external wiring for the control cabinet and all accessories as actually used in the field shall be furnished, including one (1) reproducible AutoCAD CD Disk for the controller cabinet wiring when installed. Before acceptance of the job, all operation and maintenance manuals and complete and accurate parts lists shall be supplied.

The City of Worcester's Traffic Engineer will have final approval for all traffic signal equipment.

The Contractor shall not receive payment for, nor will he be allowed to install any item or materials, which require shop drawing approval unless, he has received written approval for the shop drawing for that item from the City's Traffic Engineer.

The Contractor shall submit a list of the manufacturer's designations (catalog number, model number or revision number) for all equipment to be used in the installation of the traffic control signal system for which shop drawings are not required.

Shop drawings are required for signal heads and back plates, mounting hardware, loop detector cable and sealant, mast arms (including long hand calculations with deflection listed), traffic signal bases and poles, pedestrian signals and buttons, interconnecting cable, traffic signal cable, electrical conduit, central office monitoring equipment, controllers and all equipment housed within the controller cabinets, including load switches, amplifiers, conflict monitors, special logic boards, relays, etc.

SERVICE CONNECTIONS

The Contractor shall be responsible for the payment of all fees for services and permits rendered in conjunction with service connections by companies under this project. The cost thereof shall be included in the lump sum price of the Traffic Signal Controls listed in the proposal.

RESPONSIBILITY AND DISPOSAL OF SURPLUS MATERIALS

Removal of existing traffic signal equipment and their accessories shall be done in a manner that will not damage reusable material. Any traffic signal equipment damaged though carelessness or lack of protection by the Contractor shall be replaced at the Contractor's expense. All traffic signal equipment to be removed and stacked shall be delivered to the City of Worcester Traffic Department, at the City Yard, located at 26 Albany Street, as directed by the City's Traffic Engineer. All surplus materials resulting from the excavation and not needed for use on the project as determined by the Engineer shall be disposed of by the Contractor and away from the limits of the project. All foundations for traffic signals or controller cabinets are to be removed completely and not covered over, with the exception of strain pole foundations. Strain pole foundations will be broken down to a depth of not less than eighteen (18") inches below the finished grade level.

Removal and resetting requires the removal of signal equipment, including replacing old poles with new poles, installing new flute jackets, either painting the existing base or installing a new base as directed by the City's Traffic Engineer. All existing equipment to be utilized in the construction of the new installation shall be thoroughly cleaned, powdered coated for the type required for the installation.

FINE TUNING, ADJUSTMENT, AND TESTING PERIOD

After the Contractor has finished installing the controller and all other associated signal equipment and after the Contractor has set the signal equipment to operate as specified in the contract documents, the fine tuning, adjusting and testing period shall begin. The Contractor shall advise the Engineer, in writing, of the date of the beginning of the fine-tuning and testing period. This testing period shall not start until the work at the intersections is complete. During this period, the Contractor, under the direction of the Engineer, shall make necessary adjustments and tests to insure the safe and efficient operation of the equipment. This period shall not last for more than 30 days and the Contract completion date has taken this testing period into consideration. No request for final acceptance will be considered until successful completion of the testing period.

The Contractor shall notify the City's Traffic Engineer in writing of the start date of fine tuning period prior to the starting date. The cost of electrical energy consumed by the operation of traffic signals during the construction, fine tuning and testing of the traffic signals will be borne by the Contractor.

GUARANTEE AFTER FINAL ACCEPTANCE

The Contractor shall diagnose (troubleshoot) the system and, at his own expense, replace any part of the traffic signal control equipment found to be defective in workmanship, material or manner of functioning within one year from the date of final acceptance of all the installations under this contract. This requirement does not affect the one-year warranty period on equipment specified in subsection 815.20 of the Section 800 of the MSSHB Standard Specifications.

Upon the date of final acceptance of the project, the Contractor shall turn over all guarantees and warranties to the City.

Final acceptance will not be given unless all permits, finished sketches or wiring diagrams are turned over to the City's Traffic Engineer. No retainage or bonds will be released until final acceptance is approved.

QUALIFIED ELECTRICIANS

The Contractor shall submit a list of the Journeyman Electricians (Massachusetts License) along with copies of their licenses, who will perform the electrical work within this project. Journeymen performing electrical work on traffic signals must be certified by I.M.S.A. with a LEVEL II or higher certification in Traffic Signal Technicians. A copy of the certification shall be submitted to the City of Worcester Department of Public Works. The Contractor shall submit all requirements within ten (10) days after awarding of the bid.

FLASHING OPERATION

Changes from flashing to stop-and-go to flashing operation shall occur as set forth in the latest edition of the MUTCD.

ITEM 601 CONTROLLER (EACH)

A. ***GENERAL***

The controller unit shall be user-friendly, fully actuated, keyboard entry, menu driven, with internal time base coordination capability, internal time clock and emergency preemption without the need for external equipment. The controller shall conform to Section 800 of the MSSHB Standard Specifications. The controller shall be in full compliance with the NTCIP open standards 1201 and 1202 to communicate with City of Worcester central traffic management system, compatible with a master controller if in a closed-loop system, and provide an Either net port, all conforming to all applicable requirements of NEMA Standard TS-2 Type II. The controller shall also provide a connection for fiber optics communication and for video capabilities. The keyboard entry controller must be capable of operating in either single or dual ring mode with either sequential or concurrent phase control. An adaptor shall be supplied to connect the controller to either a TS-1 or TS-2 controller. Overlap phases shall be programmable through the keyboard and be capable of operating as a volume density controller. The controller shall contain all the necessary hardware to operate as a Closed Loop System. An operation manual and graphics shall be supplied for each controller. The controller shall contain all the necessary hardware, including cables and internal system modem and security controlled external modem connected to either telephone or fiber optic communications system. When assigning the phasing and sequence, phase 9 shall always be programmed for an exclusive pedestrian phase. The controller shall contain a communications module that accommodates communications via an Ethernet port, a USB ports, and a GPS port.

The controller unit shall retain all intersection data and controller programming in a plug in memory module utilizing non-volatile EEPROM memory. The Real Time Clock shall be maintained by a battery backup during power outages. The controller shall be programmable for Daylight Savings Time.

The controller unit shall be capable of two (2) through sixteen- (16) phase operation and sixteen (16) keyboard programmable overlaps. The controller shall have internal pre-emption with capability of six (6) unique pre-empt sequences. Each pre-empt sequence shall be fully user programmable for timing and signal display in response to an individual pre-empt command input. The controller shall provide access for all preemption and coordination functions. The controller unit and all equipment shall have approved surge protection. The controller shall have a standard RS232 port for one (1) data transfer cable and one (1) printer cable provided with each unit. The controller shall be provided with a standard cable for connection from the controller to the pre-emption unit.

Timing circuits of the traffic signal controllers shall be fully digital and shall be as accurate as the 60 Hz power source with an input range from 105 VAC to 130 VAC, over a temperature range encountered in Massachusetts.

B. ***MEASUREMENT AND PAYMENT***

Payment for this item shall be at the bid price per each item complete in place.

ITEM 601.10 CONTROLLER CABINET HARNESS (EACH)

A. ***GENERAL***

The wiring harness shall be used to connect a TS-1 cabinet to a TS-2 Type II controller.

B. ***MEASUREMENT AND PAYMENT***

Payment for this item shall be per each.

ITEM 602	**CONTROLLER CABINET ASSEMBLY, SIZE "P"-PER SPECIFICATIONS COMPLETE IN PLACE**
ITEM 602.05	**CONTROLLER CABINET SHELL ONLY, SIZE "P" EACH**
ITEM 602.10	**CONTROLLER CABINET ASSEMBLY, SIZE "M"-PER SPECIFICATIONS COMPLETE IN PLACE**
ITEM 602.15	**CONTROLLER CABINET SHELL ONLY, SIZE "M" (EACH)**
ITEM 602.20	**SSS-87 STANDARD LOAD SWITCH W/I & O FUNCTIONS (200 TYP) (EACH)**
ITEM 602.30	**SSF-87 FLASHER LOAD SWITCH (204 TYP) (EACH)**
ITEM 602.40	**30A RELAY SWITCHES (EACH)**
ITEM 602.50	**MMU-16 SERIES MANAGEMENT MALFUNCTION UNIT (EACH)**
ITEM 602.51	**CHANNEL CONFLICT MONITOR FOR CLOSED LOOP SYSTEM (EACH)**
ITEM 602.52	**6 CHANNEL CONFLICT MONITOR FOR CLOSED LOOP SYSTEM (EACH)**
ITEM 602.60	**BIU 700 (EACH)**
ITEM 602.70	**24V -5A SHELF MOUNT POWER SUPPLY FOR TS-2 CABINET (EACH)**
ITEM 602.81	**OPTICOM DUAL (2) CHANNEL PHASE SELECTORS (700 SERIES) (EACH)**
ITEM 602.82	**OPTICOM FOUR (4) CHANNEL PHASE SELECTORS (700 SERIES) (EACH)**
ITEM 602.83	**WHITE CONFORMATION STROBE INDICATOR FOR PRE-EMPTION (EACH)**
ITEM 602.84	**OPTICOM DETECTOR (700 SERIES) – ONE-WAY DIRECTION (EACH)**
ITEM 602.85	**OPTICOM DETECTOR (700 SERIES) – TWO-WAY DIRECTION (EACH)**
ITEM 602.90	**COOLING FANS FOR CONTROLLER CABINET (EACH)**
ITEM 602.91	**THERMOSTATS FOR COOLING FANS IN CONTROLLER CABINET (EACH)**

A. ***GENERAL***

Each cabinet shall be equipped with two (2) video detection amplifiers (1 single channel video detector and 1 dual channel video detector), an Integrated BIU and Video Detection Communications Module, and a Single Point Interface Ethernet Device With MPEG4/H.264 Video Streaming, all meeting the City of Worcester Specifications for Video Detection as described herein. The cabinet shall contain a 9" LCD color monitor. A watertight sealant shall be placed between the controller cabinet and the foundation. The top of the concrete base for the controller cabinet shall be approximately 12 inches above finish grade (minimum). The foundation shall provide a spare sweep as directed by the Engineer.

The cabinet is to be fabricated sheet metal, base mounted type. Cabinet shall be fabricated from a minimum thickness of 0.125-inch aluminum.

A National Grid approved meter socket shall be mounted on the side of the cabinet. The Contractor shall furnish and install the meter socket and National Grid Company shall furnish and install the meter. The cabinet shall include four (4) video suppressors to allow conversion to video detection with ease. A separately fused, ground fault duplex fifteen (15) amps outlet on the door, a double duplex 15 amp outlet on the side panel and a light receptacle shall be installed for the power supply of additional equipment. Adequate 120V AC power terminals shall be provided. Lightning arresters of the rare gas type with auxiliary air gap shall be installed. **All signal outputs shall be separately fused.**

It is intended that all equipment be mounted and all necessary provisions for mounting and wiring of all equipment shall be made at the factory of the controller equipment manufacturer prior to shipping the cabinet and control components. All necessary terminal strips, brackets, etc. shall be installed at the factory. The controller cabinet rack assembly shall be equipped for an Opticom phase selector, including harness. Terminals for auxiliary equipment to be installed shall be clearly and permanently labeled as to functions. It is understood that all cabinets for the National Electrical Manufactures Association (NEMA) controllers of the same phase

capacity in the City of Worcester are interchangeable. Thus, the amount of field wiring shall be kept to a minimum.

No equipment components shall be stacked. Brackets, shelves, hangers, or other supports designed to assure convenient accessibility for inspection and maintenance shall be installed at the factory. Adjustable aluminum shelving is required. No plywood shelving side panels or rear panels shall be used in any cabinet. A pull out document drawer shelf shall be provided to store plans and provide a shelf for a laptop computer. A suitable weatherproof container for plans and diagrams shall be mounted on the cabinet door with eyehooks fastened from the "police panel" cover.

Each main door shall be designed to open easily and close securely while retaining weatherproof quality. Handle and latch mechanisms shall be designed for trouble free operations. An adjustable latching mechanism shall be supplied to hold the main door in the open position for use when servicing equipment. Each main door shall have a momentary push-button switch installed to provide an alarm to the system of any entries to the cabinet and provide automatic lighting within the cabinet.

A second hinged door, mounted on the main door, shall give access to designated switches on a "police panel". This door shall be provided with a different lock and key. Mounted within the "police panel" door shall be switches to control flashing operation and shutdown. Each controller cabinet shall be equipped with an external multi-port signature modem to allow communications to a Closed Loop system <u>and</u> communications with a Video Detection system. The controller cabinet shall contain a video compressor mounted on the side of the cabinet to allow conversion from loop detection to video detection.

Controller cabinet wiring diagrams shall be submitted on reproducible sheets no larger than 24 inches by 36 inches and in AUTOCADD format. All actual and potential terminal strip connections shall be shown. Accessory equipment includes, but is not limited to, flashers, switches, relays, logic modules, preempt phase selector, detectors, etc. All identification on the diagram shall be installed and all field labeling shall be consistent with the diagrams. The format symbols, identifications, operating sequence, etc., common to all intersection wiring diagrams shall be standardized and consistent with appropriate City of Worcester Standards. The control cabinet wiring diagrams shall include a sketch of the intersection controlled and the approximate location and identification of each signal face and detector as shown on the plans. The control cabinet wiring diagrams shall also include all information shown on the phasing and timing charts as shown on the plans, including all special reference notes and all field labeling. This may be a reduced copy of the original phasing and timing charts. All actual and potential terminal strip connections shall be shown on the wiring diagrams. All holes and interior surfaces likely to carry a cable shall be deburred and made free of all sharp edges. All holes shall be sealed with a plastic or rubberized washer to prevent damage to cable. All wiring shall be concealed internally. All unused bays shall be covered to prevent dust from entering.

All Load Switches shall be a modular solid state assembly with I/O and have L.E.D. indicators to show which I/O function is called for by the controller (i.e. Red, Yellow or Green), meet or exceed NEMA TS 1- 1989 requirements and be listed on the MassDOT Traffic Signal Equipment Approval list. The controller cabinet shall have a full complement of load switches.

All Relay Switches shall be a 30A modular solid state assembly and meet or exceed NEMA TS1-1989 requirements and be listed on the MassDOT Traffic Signal Equipment Approval list.

The Malfunction Management Unit (MMU) shall comply with section 4 of the NEMA TS-2 standards. The MMU shall be connected to the controller unit by the Synchronous Data Link Control (SDLC) and the active status of the MMU will be read through the controller unit and also thru a Closed Loop Communications System. The MMU shall have an Ethernet port, LCD display and shall work with all modes of FYA.

The Bus Interface Unit (BIU) shall meet or exceed all the requirements of the NEMA TS2-2003 standards for BIU configuration.

A separate power supply shall be supplied and installed in the TS 2 cabinet. The unit shall be AC line powered and provide regulated DC power, unregulated AC power, and a line frequency reference for the rack mounted loop amplifiers, bus interface units, load switches and other auxiliary cabinet equipment as required including video detection. At a minimum, the power supply shall meet all requirements of Section 5.3.5 of the NEMA TS 2 Standard. The power supply shall be shelf mounted. The unit shall contain four LED indicators on the front panel to indicate the four outputs; + 12 VDC +/- 1 VDC @ 5.0 amps, + 24 VDC +/- 2 VDC @ 2.0 amps, 12 VAC @ 250 milliamps, and 60 Hz line frequency reference. A test point terminal shall also be located on the unit's front panel for +24VDC and logic ground testing.

A SDLC Serial Bus shall conform to section TS2 Section 3.31 a SDLC (Synchronous Data Link Control) to allow communications between the controller unit, MMU, and BIU's. Two (2) additional spare BIU's shall be equipped with each controller cabinet.

Cable installation

Cable from each local controller to each traffic signal shall have a minimum of Twenty (20) conductors #12 AWG, singles, stranded, I.M.S.A. Specification 19-1 1968 traffic control cable shall be used for signal cable. Special purpose grounding and bonding wire shall be No. 8 AWG or larger conforming to the requirements of ASTMB-3.

B. ***MEASUREMENT AND PAYMENT***

Payment for these items shall be as designated at the applicable unit price as bid in the proposal.

ITEM 603 CONCRETE FOUNDATIONS (FOR CONTROLLER CABINET) (EACH)

A. ***GENERAL***

All controller cabinets shall be constructed using 4,000 psi, ¾ inch, 610 Cement Concrete Masonry conforming to the relevant provisions of Section M4 of the Standard Specifications. All controller foundations shall have a 12" reveal. No forms for foundations shall be set nor shall concrete be placed until the excavation has been inspected and approved by the City.

All sweeps to be installed in cabinet foundation shall be 3-inch (PVC) sweeps with sufficient 3 inch PVC riser to project above the finish grade of the base. A cement concrete pad shall abut the front of the cabinet and shall be built in accordance with the City's sidewalk specifications. This pad shall project at least 1 ft. to each side of the cabinet and at least 3 ft. in front. This pad shall contain a 12" x 24" electrical pull box 2 ft. in front of the cabinet. This pull box will provide 3 - 3" PVC conduit directly into the cabinet foundation, completely separate from the electrical and telecommunications conduit connections.

B. ***MEASUREMENT AND PAYMENT***

Payment for this item shall be at the bid price per each item complete in place.

ITEM 604 VIDEO DETECTION CAMERAS WITH MOUNTING HARDWARE COMPLETE IN PLACE

ITEM 604.10 VIDEO DETECTION RACK PLUG-IN AMPLIFIERS-SINGLE CHANNEL (EACH)

ITEM 604.20 VIDEO DETECTION RACK PLUG-IN AMPLIFIERS – DUAL CHANNEL (EACH)

ITEM 604.30 VIDEO DETECTION RACK PLUG-IN AMPLIFIERS – THREE CHANNEL (EACH)

ITEM 604.40 VIDEO DETECTION RACK PLUG-IN AMPLIFIERS – FOUR CHANNEL (EACH)

ITEM 604.50 VIDEO CAMERA WIRING HARNESS WHIPS (EACH)

ITEM 604.60 ASTRO-BRAC – VIDEO MOUNTING HARDWARE (EACH)

ITEM 604.61 ASTRO-BRAC – VIDEO MOUNTING HARDWARE W/WIRING BOX (EACH)

A. ***GENERAL***

This specification sets forth the minimum requirements for a system that detects vehicles on a roadway using only video images of vehicle and bicycle traffic including cameras that are to be used by video detection systems. The video detection cameral shall be specifically designed and manufactured for video vehicle detection applications and shall be approved by the video detection processor manufacturer. The video detection camera shall be made in the U.S.A. in compliance with the FTA "Buy America" regulations. The video detection system shall be capable of operating and communicating with the City's current Closed Loop system over fiber optic lines within the City's Ethernet system.

B. ***VIDEO DETECTION CAMERA***

The video cameras used for traffic detection shall be furnished by the Video Detection Processor (VDP) supplier and shall be qualified by the supplier to ensure proper video detection system operation. The camera shall produce a useable video image of the bodies of vehicles under all roadway lighting conditions, regardless of time of day.

The minimum range of scene luminance over which the camera shall produce a useable video image shall be the minimum range from night time to day time, but not less than the range 0.1 lux to 10,000 lux. The camera

shall use a Charge Couple Device (CCD) sensing element and shall output monochrome or color video with resolution of not less than 380 lines horizontal. The camera shall include auto-iris control based upon average scene luminance and shall be equipped with an auto-iris lens. The camera shall include a variable focal length lens with variable focus that can be adjusted, without opening up the camera housing, to suit the site geometry. The camera electronics shall include AGC to produce a satisfactory image at night.

The camera shall be housed in an environmentally sealed enclosure pressurized with dry gas to minimize the formation of condensate and extend the life of the camera and lens. The housing shall be field rotatable to allow proper alignment between the camera and the traveled road surface. The camera enclosure shall be equipped with a sun shield. The sunshield shall include a provision for water diversion to prevent water from flowing in the cameras field of view. The camera enclosure with sunshield shall be less than 6" diameter, less than 26" long, and shall weigh less than 12 pounds when the camera and lens are mounted inside the enclosure. The camera enclosure shall include a thermostatically controlled heater to assure proper operation of the lens iris at low temperatures and prevent moisture condensation on the optical faceplate of the enclosure. When mounted outdoors in the enclosure, the camera shall operate satisfactorily in a temperature range from -34 degrees C to +60 degrees C and a humidity range from 0% RH to 100% RH.

The camera shall be powered by 120 VAC 60 Hz. Power consumption shall be less than 40 watts under all conditions. Recommended camera placement shall be 33 feet (or 10 meters) above the roadway, and over the traveled way on which vehicles are to be detected. The camera shall view approaching vehicles at a distance not to exceed 350 feet for reliable detection. The camera enclosure shall be equipped with separate, weather-tight connections for power and video cables at the rear of the enclosure to allow diagnostic testing and viewing of video at the camera while the camera is installed on a mast arm or pole. Video and power shall not be connected with the same connector. The video signal output by the camera shall be in RS170 format and be viewed in real time continuous video imaging. The video signal shall be fully isolated from the camera enclosure and power cabling.

The camera shall produce a useable video image of the bodies of vehicles under all roadway lighting conditions, regardless of time of day. The minimum range of scene luminance over which the camera shall produce a useable video image shall be the minimum range from nighttime to daytime, but not less than the range 0.1 lux to 10,000 lux. The camera shall use a Charge Couple Device (CCD) sensing element and shall output monochrome video with resolution of not less than 380 lines horizontal.

The camera shall include an electronic shutter control based upon average scene luminance and shall be equipped with a factory adjusted manual iris. Auto-iris lenses are not allowed. The camera shall include a variable focal length lens with variable focus that can be adjusted, without opening up the camera housing, to suit the site geometry by means of a portable interface device designed for that purpose and manufactured by the detection system supplier. The horizontal field of view shall be adjustable from 8.1 to 45.9 degrees.

The camera electronics shall include Automatic Gain Control (AGC) to produce a satisfactory image at night.

The camera shall be housed in a weather-tight sealed enclosure. All connections shall be made in a weather tight seal at the video camera and in the controller cabinet only. No other splices will be permitted. The housing shall be field rotatable to allow proper alignment between the camera and the traveled road surface. The camera enclosure shall be equipped with a sunshield. The sunshield shall include a provision for water diversion to prevent water from flowing in the camera's field of view. The camera enclosure with sunshield shall be less than 6" diameter, less than 15" long, and shall weigh less than 6 pounds when the camera and lens are mounted inside the enclosure. The camera enclosure shall include a thermostatically controlled heater to assure proper operation of the lens shutter at low temperatures and prevent moisture condensation on the optical faceplate of the enclosure.

When mounted outdoors in the enclosure, the camera shall operate satisfactorily in a temperature range from -34 degrees C to +60 degrees C and a humidity range from 0%RH to 100% RH. The camera shall be powered by 120-240 VAC 50/60 Hz... Power consumption shall be 15 watts or less under all conditions.

Recommended camera placement height shall be 33 feet (or 10 meters) above the roadway, and over the traveled way on which vehicles are to be detected when possible, for this reason, the video detection mounting hardware shall consist of a 6-foot ASTRO-Brac bracket. The camera shall view approaching vehicles at a distance not to exceed 350 feet for reliable detection (height to distance ratio of 1:10). Camera placement and Field Of View (FOV) shall be unobstructed and as noted in the installation documentation provided by the supplier. The supplier shall be responsible for the complete set-up of the detection zone system.

The camera enclosure shall be equipped with separate, weather-tight connections for power and setup video cables at the rear of the enclosure. No splices shall be allowed between the video camera and between the controller cabinet. All connections shall be at the camera and in the controller cabinet only. These connections may also allow diagnostic testing and viewing of video at the camera while the camera is installed on a mast arm or pole using a Lens Adjustment Module (LAM) supplied by the VDP supplier. Video and power shall not be connected within the same connector.

The video signal output by the camera shall be Color RS170 or CCIR format.

The video signal shall be fully isolated from the camera enclosure and power cabling. Each video processor shall contain a permanent labeled for the street name, phase, and detector number and detector termination terminals. The label shall be made of durable material such as laminated plastic, attached by wire or plastic ties. Adhesive attachment of the label shall not be acceptable.

The detector output shall be relay type with Fail Safe call capacity.

C. *MEASUREMENT AND PAYMENT*

Payment for this item shall be at the bid price per each item complete in place.

ITEM 605 VIDEO COMPRESSION SYSTEM (COMPLETE IN PLACE)

A. *GENERAL*

Integrated Bus Interface Module (BIU) and Video Detection Communication Module.

This specification sets forth the minimum requirements for a full-function BIU and integrated video detection communication module. The module shall provide outputs to the controller of vehicle calls from video processors and other modules (e.g. loop amplifiers) that reside within the detector rack.

B. *FUNCTIONAL CAPABILITIES*

The module shall have the capability of monitoring phase information and passing that information and other system data such as “time” from the controller to video detection processor modules. The module shall also accept data from video processor modules and relay the information to the controller. The unit shall provide a maximum of 64 detector outputs to the controller via the SDLC interface. The module shall reside in a NEMA TS-2 BIU slot of a detector rack to maximize the use of detector slots for video detection processor modules. The module shall interface with up to 4 video processor modules.

C. *REQUIREMENTS*

The module shall be in compliance with the following industry specifications:

Transportation Electrical Equipment Specifications (TEES), August 16, 2002 (or latest edition), California Department of Transportation

NEMA Standard Publication TS 1-1989 (or latest edition), *Traffic Control Systems,* National Electrical Manufacturers Association

NEMA Standard Publication TS 2-2003, Traffic Controller Assemblies With NTCIP Requirements, Version 02.06 (or latest edition), National Electrical Manufacturers Association

D. *DATA INTERFACES*

The module shall have three data interfaces:

The interface to the controller shall be accomplished by the use of the TS-2 SDLC port and protocol in accordance with the TS-2 specifications. The module shall be able to be configured to respond to BIU addresses 8, 9, 10 and 11 or a combination thereof.

The interface with the detector rack shall use discrete logic inputs and outputs as defined in the TS-2 specifications for BIU’s.

The interface to communicate with card rack video detection processors shall be manufacturer specific.

E. *USER INTERFACE*

The module shall be self-initiating upon application of power or upon power-on reset via the reset button. The operational user interface shall be limited to those items on the front panel and shall not require a video monitor, mouse (pointing device) or computer attached directly to the module. A manual single pole single throw (SPST)

reset push button shall be provided to the user to conduct a power-on reset of the module. The depression of the reset button shall not cause the MMU to go into "intersection flash" mode. The reset button shall be accessible from the front panel. High intensity LED indicators shall be used. The LED devices shall be clear when not lit and high intensity when lit. The indicators shall be "ON" for the active state and "OFF" for the inactive state. One LED indicator shall be provided for the TS-2 SDLC interface. The indicator shall be used to inform the user of any communication activity on the TS-2 port. LED indicators on the module representing the current status of the 64 output channels shall be provided. An illuminated LED indicator shall represent a "call" status; and a non-illuminated LED indicator shall represent a "no-call" status. Power requirements of the module shall meet the requirements defined in the TS-2 specifications for BIU modules. The module shall require a normal supply voltage of 24 VDC ± 2 VDC. A voltage of 16 VDC or less shall be considered loss of power and a voltage of 18 VDC or more shall be considered adequate for operation.

The plug-in card shall be design for "hot swapping"; in other words designed so that the unit is not damaged by insertion to or removal from a powered rack. The unit shall operate within the environmental limits identified in the NEMA TS-2 specifications. The module shall be designed and tested to meet the environmental requirements specified in the TS-2 specifications.

F. ***MECHANICAL***

The physical form factor of the module shall be in accordance with NEMA TS-2 BIU form factor requirements as specified in the TS-2 specifications. All interface cables and display indicators shall be on the front of the unit for easy access. The module front panel shall be aluminum and shall be designed for ease of manufacturability. All ferrous metal parts shall be protected against corrosion. All materials shall be moisture and fungus resistant. Printed circuit boards shall meet the requirements of the TS-2 specifications. Input and output connectors shall be provided with locking mechanisms that eliminate accidental extraction of interface cables.

Limited Warranty

The supplier shall provide a limited three-year warranty on the module. See supplier's standard warranty included in the Terms and Conditions of Sale documentation. During the warranty period, technical support shall be available from the supplier via telephone within 4 hours of the time a call is made by a user, and this support shall be available from factory-certified personnel or factory-certified installers.

Maintenance and Support

The supplier shall maintain an adequate inventory of parts to support maintenance and repair of the video detection system. These parts shall be available for delivery within 30 days of placement of an acceptable order at the supplier's then current pricing and terms of sale for said parts. The supplier shall maintain an ongoing program of technical support for the video detection system. This technical support shall be available via telephone, or via personnel sent to the installation site upon placement of an acceptable order at the supplier's then current pricing and terms of sale for on site technical support services. Installation or training support shall be provided by a factory-authorized representative. All product documentation shall be written in the English language.

G. ***MEASUREMENT AND PAYMENT***

Payment for this item shall be paid for each item complete in place.

ITEM 606 RACK MOUNTED VIDEO DETECTION SINGLE POINT INTERFACE ETHERNET DEVICE WITH MPEG4/H.264 (COMPLETE IN PLACE)

A. ***GENERAL***

This specification sets forth the minimum requirements for a module that provides a single point interface to multiple rack-mounted video detection units. This module shall also have the capability to stream up to 4 simultaneous video streams over an Ethernet interface. The single point Ethernet device shall be compatible with the video detection system. The single point Ethernet device shall be made in the U.S.A. in compliance with FTA "Buy America" regulations.

B. ***FUNCTIONAL CAPABILITIES***

The interface device shall provide capabilities to enable multiple rack-mounted video detection processors to be locally and remotely accessed from a single point via one set of user interface devices. User interface devices are defined as a pointing device (mouse or track-ball) and video monitor. Up to four video detection processor chains (video detection processor and extension modules) shall be accommodated. The device shall

allow the operator to switch video output display for any of the attached rack-mounted video detection processors by pressing a momentary switch or by using the remote access software. Local user access to video detection programming shall be limited to the detection processor unit that is currently being displayed on the monitor. All local programming and setup parameters for the video detection processor shall be user accessible through the interface unit without requiring the user to swap user interface cables between video detection processors. Remote access to the device shall be through the built-in Ethernet port or EIA-232 port via access software running on a Microsoft Windows based personal computer. An internet browser-based remote access firmware shall also be available for remote setup and diagnostics of the interface unit. The interface unit shall support streaming video technology using MPEG4 and H.264 standards to allow the user to monitor video detection imagery over the Ethernet interface. Motion JPEG streaming video shall not be allowed. The user shall be able to select which video input to be displayed on the output video monitor by repeatedly depressing the menu button. The user shall be able to select a quad view of all of the four cameras simultaneously on the output video monitor by depressing the menu button. The interface unit shall allow four independent streams, one from each video detection processor, to be transported via Ethernet to four independent streaming video players simultaneously in CIF resolution. The browser interface shall also allow the user to view the streaming video on the browser interface. The browser interface shall allow the user to select the resolution of the displayed streamed video. The interface unit shall support the streaming and display of D1, CIF, QCIF, VGA and QVGA video resolutions in a single stream or four concurrent streams in CIF resolution. The interface unit shall allow the user to select a quad-view of all four input video signals to be shown on the browser interface. The interface unit shall allow the user to manage the unit's Ethernet bandwidth usage by allowing the user to select the maximum bandwidth limit between 32 kbps and 7.0 Mbps. The browser interface shall allow the user to change the unit's Ethernet network settings of IP address, subnet mask and default gateway. The interface unit shall allow the user to upload new application firmware through the use of the browser interface. Access to the interface unit shall be under password control and the browser interface shall allow the user to change the password. The interface unit shall have the capability to perform IP port redirecting between the remote management software and each attached video detection processor. A unique IP port number shall be assigned for each video detection interface. The port number shall not be identical to the web browser interface of 80.

C. *INTERFACE DEVICE HARDWARE*

The interface device shall be specifically designed to mount in a standard TS-1, TS-2, and 170 type detector rack, using the edge connector to obtain power. No adapters shall be required to mount the interface device in a standard detector rack. The interface device shall occupy no more than two slots in the detector rack and shall provide a loop-type handle for easy installation and removal. The interface device shall be powered by 12 or 24 volts DC and shall not consume more than 6.25 watts. The unit shall automatically compensate for the different input voltages and shall be hot-swappable. The interface device shall operate within the temperature range from -31°F to +165°F (-35°C to +74°C) and a humidity range from 0% RH to 95% RH, non-condensing. Video Ports - The interface unit shall accommodate a maximum of four composite video inputs and one video output. Video inputs and video output shall be made via BNC connectors to ensure secure connections. RCA or other straight friction plug-in type connections shall not be allowed. Video inputs shall use a vendor supplied "octopus" cable to accommodate the four video inputs. Provisions shall be made to accommodate the mating cable to utilize jack screws for securing the octopus cable. The interface unit shall accommodate either monochrome or color video signals conforming to NTSC or PAL video standards. The interface unit shall automatically sense the video input signal and configure the video output port to either NTSC or PAL standards. Each video input signal shall be separately sensed to allow mixed video signals. The interface unit shall interface with up to four video detection processors using RJ-45 interface connectors.

The interface unit shall support the use of USB pointing devices. The unit shall support either a USB mouse or trackball. Pointing devices shall not require vendor specific pointing device software drivers. An EIA-232 communications port shall be provided for local and remote access. The connector for this port shall be a 9-pin "D" subminiature connector on the front of the interface unit. Provisions shall be made to accommodate mating cables to utilize jack screws for securing cables. Hi-intensity LED status lights shall be provided to facilitate system monitoring. Indicators shall be provided to show the status of the internal processor, video lock and indication of which video input is being monitored. An Ethernet port shall be integrated within the interface unit. The Ethernet port shall conform to 802.3 Ethernet specifications and shall auto-sense between 10 and 100 Mbps data rates. Industry standard TCP/IP (UDP and TCP packets) protocol shall be supported. The Ethernet connection shall be made through a RJ-45 connector.

D. *LIMITED WARRANTY*

The supplier shall provide a limited three-year warranty on the video detection system. See suppliers standard warranty included in the Terms and Conditions of Sale documentation. During the warranty period, technical support shall be available from the supplier via telephone within 4 hours of the time a call is made by a user, and this support shall be available from factory-certified personnel or factory-certified installers.

E. ***MAINTENANCE AND SUPPORT***

The supplier shall maintain an adequate inventory of parts to support maintenance and repair of the system. These parts shall be available for delivery within 30 days of placement. The supplier shall maintain an ongoing program of technical support for the interface unit and video detection system. This technical support shall be available via telephone, or via personnel sent to the installation site upon placement of an acceptable order at the supplier's then current pricing and terms of sale for on-site technical support services. Installation or training support shall be provided by a factory authorized representative. All product documentation shall be written in the English language.

F. ***MEASUREMENT AND PAYMENT***

Payment for this item shall be paid for each item complete in place.

ITEM 607 COAXIAL CABLE AND CONNECTIONS (LINEAR FOOT)

A. ***GENERAL***

The coaxial cable to be used between the camera and the VDP in the traffic cabinet shall be Belden 8281 or a 75 ohm, precision video cable with 20 gauge solid bare copper conductor (9.9 ohms/M), solid polyethylene insulating dielectric, 98% (min) tinned copper double –braided shield and black polyethylene outer covering. The signal attenuation shall not exceed 0.78 dB per 100 feet at 10 MHz. Nominal outside diameter is 0.304 inches. This cable shall be suitable for installation in conduit or overhead with appropriate span wire. Three (3) 75-ohm BNC 6 plug connectors shall be used and supplied at both the camera and cabinet ends. The coaxial cable, BNC connector, and crimping tool shall be provided to the City of Worcester by the supplier of the video detection system, and the manufacturer's instructions must be followed to ensure proper connection.

The power cabling shall be 16 AWG four conductors including one conductor for ground shall be combined with the coaxial cable, so only one cable is required for connecting the camera and power supply. The cabling shall comply with the National Electric Code, as well as local electrical codes. Cameras may acquire power from the luminaries if necessary.

The video detection system shall be installed by supplier factory certified installers and as recommended by the supplier and documented in installation materials provided by the supplier. Proof of factory certification shall be provided.

B. ***MEASUREMENT AND PAYMENT***

Payment for this item shall be paid per linear foot.

ITEM 608 12"-3 SECTION LED TRAFFIC SIGNAL HEADS W/VISORS COMPLETE (EACH)

ITEM 608.10 12" BI-MODEL FIBER-OPTIC LEFT TURN ARROW W/HOUSINGS (EACH)

ITEM 608.20 12" TUNNEL VISORS FOR TRAFFIC SIGNALS (EACH)

ITEM 608.30 12" GEOMETRICALLY PROGRAMMED LOUVER SLOTTED UNIVERSAL FULLCIRCLE & VISORS (EACH)

A. ***GENERAL***

Traffic Signal Heads shall be standard aluminum traffic signals and shall be weather tight assemblies, complete with LED indicators, "Black" in color with black fronts and be on the MassDOT approval list of approved traffic signal equipment. All RED, AMBER, and GREEN indications shall be LED with tunnel visors, with upper and lower mounting hardware with accessibility to wiring without disassembling the hardware and meet or exceed the requirements on LED Specifications listed within these Specifications.

B. ***MEASUREMENT AND PAYMENT***

Payment for this item shall be paid for each item complete in place.

ITEM 609 16" COUNTDOWN LED PEDESTRIAN SIGNAL HEADS W/VISORS (EACH)

ITEM 609.10 16" COUNTDOWN LED PEDESTRIAN MODULES (EACH)

ITEM 609.20 16” PEDESTRIAN HOUSING WITH VISORS ONLY (EACH)

ITEM 609.30 16”OPEN PEDESTRIAN VISORS (EACH)

A. ***GENERAL***

The countdown pedestrian signal heads shall be 16” LED countdown pedestrian signal module housed in an aluminum casing with visors. The signal shall consist of international symbols of an LED upright solid hand symbolizing “Don’t Walk” and a solid walking person symbolizing “Walk”. The internal countdown module shall be comprised of two 7 segment digits, 8 inches high and made of 88 Portland Orange LED’s. The countdown module shall display the number of seconds remaining throughout the pedestrian clearance interval only and blank out when not activated. This programming function shall be available on the back of the pedestrian module. The intersection controller bases the clearance time upon the Don’t Walk signal indications which automatically set the pedestrian countdown module. The countdown module shall continuously monitor the intersection controller for any changes to the pedestrian phase timing and reprogram itself automatically. All pedestrian signals shall be a one-piece unit containing both the LED “HAND” and LED “FIGURE” fixture in the same unit with an open visor, with upper and lower mounting hardware. The LED countdown signal shall retain all timing information from the controller and not be adjusted in the pedestrian signal head. The countdown pedestrian signal heads shall comply with all standards and specifications of the latest edition of the MUTCD.

B. ***MEASUREMENT AND PAYMENT***

Payment for this item shall be paid for each item complete in place.

ITEM 610 AUDIBLE PEDESTRIAN DEVICES (EACH)

A. ***GENERAL***

The audible pedestrian devices shall be an external attachment to the existing pedestrian signal head. The devices shall have a chirping and cuckoo tone with adjustable volume control. This unit shall be painted “Black”.

B. ***MEASUREMENT AND PAYMENT***

Payment for this item shall be paid for each item complete in place.

ITEM 611 ADA PEDESTRIAN PUSHBUTTONS – NON LATCHING (EACH)

ITEM 611.10 ADA PUSHBUTTON SWITCH ASSEMBLY (BOX OF 10) (EACH)

A. ***GENERAL***

Pedestrian Pushbutton plaque shall be 5” x 7” one piece cast aluminum alloy and finished with a clear gloss, powder coat finish. The raised printed legend shall be painted black to provide maximum contrast to the background of the plaque. The round button cap must be made of 316 gauge stainless steel. The switch assembly shall be a non-latching solid state Piezo switch rated for 100 million cycles with no moving plunger or moving electrical contacts. The button must give a two tone confirmation indication of button being pushed (One tone for push, one tone for release) and an LED conformation indication light which is illuminated upon activation requiring no additional wiring. The button must have built in surge suppression, must operate immediately after being immersed in water for 5 minutes, and must be able to allow ice to form such that it would impede function of button or button cap. The pedestrian push-button plunger shall comply with all ADA and MUTCD specifications and be constructed to not stick in any situation and be vandal resistant. All switch electronics must be sealed within the cast aluminum housing and no exposed wiring from the back of the button shall be exposed. The force required to activate the controls shall not be greater than 5 pounds. Total depth of button, from face of button cap to back of button terminal, must be less than 1.75 inches.

B. ***MEASUREMENT AND PAYMENT***

Payment for these items shall be paid for each item complete in place.

ITEM 612 TRAFFIC SIGNAL POLES-9 FT. STANDARD (EACH)

ITEM 612.10 ALUMINUM POLE PLATES FOR SIDE OF POLE MOUNTING (EACH)

ITEM 612.20 UPPER & LOWER PIPE ASSEMBLY FOR SINGLE SECTION- COMPLETE (EACH)

ITEM 612.25 UPPER & LOWER PIPE ASSEMBLY FOR TWOWAY SECTION COMPLETE (EACH)

ITEM 612.30 UPPER & LOWER PIPE ASSEMBLY FOR MULTI - SECTION COMPLETE (EACH)

ITEM 612.40 THREADED 3-WAY CENTER SUPPORT W/SET SCREWS (EACH)

ITEM 612.50 IRON "T" W/SET SCREWS – THREADED ALL ENDS (EACH)

ITEM 612.51 IRON ELBOW W/SET SCREWS – THREADED BOTH ENDS (EACH)

ITEM 612.52 SUPPORT TUBE 1 ½" X 43" THREADED BOTH ENDS (EACH)

ITEM 612.60 STEEL WASHERS FOR TRAFFIC SIGNALS (EACH)

ITEM 612.70 SLIP FITTER ASSEMBLY FOR 3 & 4 WAY SIGNAL HEADS THREADED (EACH)

ITEM 612.71 CAST NIPPLE LOCKING NUT (EACH)

ITEM 612.72 NEOPRENE WASHERS FOR TRAFFIC SIGNALS (EACH)

ITEM 612.73 SERRATED LOCKING RINGS FOR TRAFFIC SIGNALS (EACH)

ITEM 612.74 THREADED OCTAGON SIGNAL CLOSURE CLOSING CAP - 2" LENGTH (EACH)

A. ***GENERAL***

Traffic signal and pedestrian posts shall be 4-inch aluminum pipe. All traffic signal posts shall be located to the back of the sidewalk unless the engineer authorizes another location. Bottoms shall have 4-inch pipe threads. All signal posts shall have a "Black" powdered coat finish. All threads shall be protected during transportation.

No portion of the pole mounted vehicle signals shall be less than 24 inches from the curb line. "Side arm" brackets shall be used at locations where this distance cannot be maintained with standard brackets. All brackets shall be 1- 1/2" steel pipe with cast iron fittings painted "Black". All pedestrian signal heads and traffic signal heads shall be attached to the traffic post with upper and lower assemblies with accessibility to the wiring without dissembling the hardware, unless attached directly onto the post top. All the traffic signal hardware material (T, elbows fittings, etc…) shall be threaded at all openings, with set screws and painted "Black".

B. ***MEASUREMENT AND PAYMENT***

Payment for these items shall be paid for each item complete in place.

ITEM 613 ALUMINUM OCTAGON TRAFFIC SIGNAL BASES W/STEEL COUPLING (EACH)

A. ***GENERAL***

Bases shall be of the octagonal transformer type made of aluminum alloy 356 (ASTM B-26) permanent mold castings with threaded steel collar inserts and a standard removal access panel, as shown on the shop drawings. Bases shall have a "Black" powdered coat finish.

B. ***MEASUREMENT AND PAYMENT***

Payment for these items shall be paid for each item complete in place.

ITEM 614.15 15 FT. MAST ARM ASSEMBLY-TYPE II, MAX (HEAVY) LOADINGS (EACH)

ITEM 614.20 20 FT. MAST ARM ASSEMBLY-TYPE II, MAX (HEAVY) LOADINGS (EACH)

ITEM 614.25 25 FT. MAST ARM ASSEMBLY-TYPE II, MAX (HEAVY) LOADINGS (EACH)

ITEM 614.30 30 FT. MAST ARM ASSEMBLY-TYPE II, MAX (HEAVY) LOADINGS (EACH)

ITEM 614.35 35 FT. MAST ARM ASSEMBLY-TYPE II, MAX (HEAVY) LOADINGS (EACH)

ITEM 614.40 40 FT. MAST ARM ASSEMBLY-TYPE II, MAX (HEAVY) LOADINGS (EACH)

ITEM 614.45 45 FT. MAST ARM ASSEMBLY-TYPE II, MAX (HEAVY) LOADINGS (EACH)

ITEM 614.50 MAST ARM BASES – 20" BOLT PATTERN ON BOTTOM (EACH)

ITEM 614.60 MAST ARM ORNAMENTAL BASES-VALMONT TYPE (EACH)

ITEM 614.70 MAST ARM ORNAMENTAL BASES-UNION METAL TYPE (EACH)

ITEM 614.81 ASTRO-BRAC ASSEMBLY-ONE WAY – 3 SECTION (EACH)

ITEM 614.82 ASTRO-BRAC ASSEMBLY-ONE WAY – 4 SECTION (EACH)

ITEM 614.83 ASTRO-BRAC ASSEMBLY-ONE WAY – 4 SECTION (EACH)

ITEM 614.84 OPTICOM BAND MOUNTING HARDWARE KITS FOR MAST ARMS (EACH)

ITEM 614.91 CAST IRON RIGID MAST ARM HANGER BODY ASSEMBLY (EACH)

ITEM 614.92 CAST IRON PLUMBIZER ASSEMBLY (EACH)

ITEM 614.93 CAST IRON FREE SWING MAST ARM HANGER ASSEMBLY- COMPLETE (EACH)

A. ***GENERAL***

All traffic signals shall be designed in a **STANDARD BOX CONFIGURATION**. This will allow proper video detection alignment and proper street name sign alignment.

Mast arm bases shall be a permanent mold casting of 356-T4 aluminum alloys. The mast arm shaft shall have an ornamental base similar to the Washington base style manufactured by Valmont Industries or similar to the Main Street Streetscape project. The use of adapter rings or clips is prohibited. The base height shall not exceed 45 inches. The base shall have a door opening and a door with a cap screw fastening device. A tapped hole shall be provided for a grounding lug. All bolts for holding hand hole and access covers shall be greased at the time of installation.

The anchor bolts shall be high strength (50,000 psi minimum yield strength). The anchor bolts shall be determined by the size of the mast arm but not less than 1 – ½ inches. All anchor bolts threads shall be greased prior to installing the base. Traffic signal posts shall not be erected on foundations until the concrete has set for a minimum of twenty - eight (28) days. Posts shall be set so that they are plumb prior to all loads applied.

Mast arms shall be a steel pole and be designed to accommodate fixed signals at the end and intermediate points as shown on the plans and designed to accommodate **max loadings (Heavy Loads)** and be designed to the latest Mass Dot specifications.. The mast arm lengths shall be as shown on the plans. Each member shall be spun from seamless tubing, ASTM- A36 alloy. Every arm shall have a high steel clamp set with minimum 5/8-inch neck bolts, or suitable means of attachment to mast arm shaft. A brushed wiring entrance hole shall be provided adjacent to the intermediate hanger. Every wiring entrance shall have a rubber grommet.

All mid mounted mast arm signal housings are to be fixed mounted using ASTRO-BRAK or an approved equal mounting at the center of the housing. No Clevis pin brackets are to be used without approval from the City's Traffic Engineer. Signal heads shall be vertically fixed-mounted. All arms shall have a removable cap at the tip. Mounting hardware for side-of-shaft mounting shall be heavy-duty pole plates and couplings. The bottom of the signal heads shall have a minimum clearance of not less than 16 feet or greater than 19 feet above the pavement grade at the center of the roadway.

The signal head mounting system shall be detailed and submitted to the City's Traffic Engineer for approval. The final adjustment of the facing of the traffic signals shall be made as directed by the City's Traffic Engineer after all signals at the intersection are in operation. . Exposed surfaces of the traffic signal post and bases shall have a "Worcester Black" polyester powder finish.

All mast arm posts shall be produced from one piece of seamless tubing, ASTM-A595 GR A Alloy, with a steel monotube (7GA = .1793 inches) and be designed to the latest Section 800 of the MSSHB specifications. The shaft shall be tapered at .14 in/ft. The top 6 feet of the shaft shall be uniform. The pole shall have no visible longitudinal or circumferential welds except those joining the shaft at the base. The shaft shall have a J-hook wire support inside the pole near the top. Access from the top of the post must be available to run any wiring without disassembling the mast arm. The bottom of the pole shall have a 4"x 6 ½ "hand hole for access to wiring. Exposed surfaces of the traffic signal mast arm post and bases shall have a "Worcester Black" polyester powder finish and tire wrapped with heavy, water-repellent paper for protection during shipping and installation.

The Contractor shall be responsible for making all necessary arrangements to have the proper utility companies relocate overhead wires in order for the proper mast arm clearances to be obtained, should any conflicts occur. The Contractor shall take extra care and precautions in placing signal heads to ensure the existing structures and overhead utility wires do not interfere with the visibility of the signal heads suspended above the roadway. All measurements to determine the exact dimensions and clearances between mast arms and existing structures and overhead utility lines shall be made in the field by the Contractor in the presence of the City's Traffic Engineer and incorporated into the erection plans and shop drawings which are submitted for approval.

All structures shall be constructed in accordance with the applicable requirements of the Section 800 of the MSSHB standard drawings. The completed structure with all appurtenances attached thereto shall be designed and constructed in accordance with the most current requirements of AASHTO " Section 800 of the MSSHB Standard Specifications for Structural Supports for Highway signs, Luminaries and Traffic Signals" (Current

edition) for a wind speed of 130 miles per hour and a 30% Gust Factor with maximum loading. Longhand design calculations shall be submitted for all mast arm and span wire assemblies. All shop drawings and calculations shall be stamped by a professional structural engineer registered in the State of Massachusetts.

B. ***MEASUREMENT AND PAYMENT***

Payment for these items shall be paid for each item complete in place.

ITEM 615 MAST ARM FOUNDATION – COMPLETE (EACH)

A. ***GENERAL***

All sweeps to be installed in mast arm bases shall be 3 inch (PVC) sweeps with sufficient 3 inch PVC riser to project above the finish grade of the base. One spare sweep and riser, capped at both ends, shall be poured in place in each mast arm base. The Engineer shall determine the location of the spare sweep. No more than two sweeps shall be in any foundation. The foundation design shall be in conformance with Section 190.62 and 801.62 of the Section 800 of the MSSHB Standard Specifications. No pre-cast foundations shall be used for mast arms.

The foundation shall be constructed with a concrete mixture having a minimum of 5,000-psi compressive strength at 28 days. Unless otherwise directed by the Engineer, poles shall not be erected on a concrete foundation until the concrete has set for at least 28 days. All mast arm anchor bolts shall be determined by the size of the mast arm but not less than 1 -1/2 inches. Bolts shall be installed in the base to the precise spacing as shown on the plans.

After the mix is placed in the forms, it shall be vibrated by mechanical means long enough to ensure complete placement without honeycombing. Care shall be exercised not to over-vibrate and reduce air content below specifications. Curing shall be by wet method for a minimum of 72 hours. Thereafter, it shall be air cured until it reaches design strength of 5,000-psi compressive strength. All foundations shall be installed at the locations as shown on the plans except as approved deviations, which are required to meet field conditions.

B. ***MEASUREMENT AND PAYMENT***

Payment for these items shall be paid for each item complete in place.

ITEM 616 12” RED LED BALL INDICATION (EACH)

ITEM 616.10 12” RED LED ARROW INDICATION (EACH)

ITEM 616.20 12” RED LED FOR 3M PROGRAMMABLE SIGNALS (EACH)

ITEM 616.30 12” GREEN LED BALL INDICATION (EACH)

ITEM 616.40 12” GREEN LED ARROW INDICATION (EACH)

ITEM 616.50 12” GREEN LED FOR 3M PROGRAMMABLE SIGNALS (EACH)

ITEM 616.60 12” AMBER LED BALL INDICATION (EACH)

ITEM 616.70 12” AMBER LED ARROW INDICATION (EACH)

ITEM 616.80 12” AMBER LED FOR 3M PROGRAMMABLE SIGNALS (EACH)

A. ***GENERAL***

An independent laboratory shall certify that all LED signal modules comply with Section 6 Quality Assurance of the ITE’s Publication ST-021 and approved as an Energy Star Partner.

LED traffic signal modules shall be designed as replacements for existing signal lamps. LED signal modules shall fit into existing traffic signal housings built to VTCSH Standard without any modification to the existing housing. Installation of the LED module into an existing signal housing shall only require removal of the existing lens and incandescent bulb, fitting of the LED module unit securely in the housing door and connecting to existing electrical wiring or terminal block by means of simple connectors. All LED modules shall be standard 12-inch lenses.

On the backside of the LED signal module there shall be a permanently marked “up” arrow to aid in proper orientation of the module for installation.

The manufacturer’s name, trademark, serial number and other necessary identification shall be permanently marked on the backside of the LED signal module.

B. *PHYSICAL AND MECHANICAL REQUIREMENTS*

The LED signal module shall be a single, self-contained device, not requiring on-site assembly for installing into an existing traffic signal housing. This device shall conform to ASTM specifications for materials used in the construction of the LED signal module.

The assembly and manufacturing process for the LED signal assembly shall be as such to assure all internal LED and electronic components are adequately supported to withstand mechanical shock and vibration from high winds and other sources. Enclosures containing the power electronic components of the signal module shall be made of flame retardant materials that will self-contain internal sparks and flames, as well as dripping materials.

Each LED signal module shell shall comprise of a smooth surface stabilized polycarbonate outer shell, multiple LED light sources, a regulated power supply and a polycarbonate back cover assembled in a silicon sealed unit. LED's are to be mounted on a polycarbonate positioning plate. Each LED signal module shall have a beveled outer shell. A mechanical alignment and assembly mechanism must ensure that each LED should be maximized by an internal beam controlling optical faceted lens.

At time of installation, the legs of LED's (heat dissipaters) should be kept at full length to improve heat dissipation from LED's. The replacement of one or more LED's as well as the replacement of one or more LED circuits must be possible without desoldering or soldering.

C. *OPTICAL AND LIGHT OUTPUT REQUIREMENTS*

The minimum luminous intensity values and light output distribution shall be shown in Section 11.04 and Table 1 of the VTCSH Standard.

The minimum luminous intensity values and light output shall be maintained within the input voltage range of 90 to 120 volts. LED signal modules shall not be allowed to fall short of the minimum intensity values at any of the 44 measuring points of the standard when lamp is turned on cold for measurements and after a 30 minute warm-up period at 100% duty cycle.

An LED traffic signal module shall not exhibit more than a nominal -1.5% change in luminous intensity per a +1°C change in ambient temperature.

The chromatical element of the LED signal modules shall conform to the chromatical requirements of Section 8.04 and Figure 1 of the VTCSH.

D. *ELECTRICAL*

All wiring and terminal blocks shall meet the requirements of Section 13.02 of the VTCSH standards.

Two captive, 2-colored coded, 900 mm long, 600 volt, #18 AWG minimum, jacketed wires, conforming to the National Electric Code, rated for a service at 105°C, are to be provided for electrical connection.

Each module shall incorporate a regulated power supply engineered to electrically protect the LED's and maintain a safe reliable operation. The power supply shall provide capacitor filtered DC regulated current to the LED's as per the LED's manufacturer's specification. The module shall meet UL No. 1012 an/or CSA C22 No. 205 standards.

The LED signal module shall operate off a 60 Hz AC line voltage ranging from 90 volts rms to 135 volts rms. Nominal rated voltage for all measurements shall be 117 volts rms. The circuitry shall prevent flicker over this voltage range. The circuitry shall prevent flicker at all voltages below 90 volts rms for a minimum time period of 16 milliseconds.

The signal module on-board circuitry shall include voltage surge protection to withstand a single peak transient of 600 volts of each polarity for 100 ms duration. The LED signal and associated on-board circuitry must meet or exceed Federal Communications Commission (FCC) Part 15 regulations concerning the emission of electronic noise.

The individual LED light sources shall be wired so that a catastrophic failure of one LED light source will not result in the loss of illumination in more than 20 percent of the LED light sources.

The LED signal module shall be compatible with currently used controllers and conflict monitors. The LED signal circuitry shall prevent false controller conflict monitor action due to excessively high off-state input impedance.

Maximum wattage for 300 mm red ball shall be 20 watts and 8 watts for 300 mm red arrow.

E. ***ENVIRONMENTAL REQUIREMENTS***

The LED signal module shall be rated for use in the ambient operating temperature range of 35°C to 75°C.

The LED signal module shall be dust and moisture tight to prevent all internal LED and electrical components. The LED signal module shall be capable of withstanding exposure to an environment of 74°C - 95% relative humidity for 168 hours without internal condensing moisture. The lens of the LED signal module shall be capable of withstanding ultraviolet (direct sunlight) exposure for a minimum time period of five (5) years without exhibiting evidence of deterioration.

F. ***WARRANTY***

The LED signal module will be replaced or repaired by the manufacturer if it exhibits a failure due to workmanship or materials defects within the first 60 months of field operation.

The LED signal module will be replaced or repaired by the manufacturer if it exhibits either a greater than 50% light output degradation or fall below the minimum intensity levels within the first 36 months of field operation.

G. ***MEASUREMENT AND PAYMENT***

Payment for these items shall be paid for each item complete in place.

ITEM 617 CLOSED LOOP MASTER COMPUTER SYSTEM COMPLETE IN PLACE (EACH)

A. ***GENERAL***

Work under this item consists of furnishing and installing all materials, equipment, and software installation for the Master Control System including the Central Computer, portable laptop computer, printer, communication link, training and updating all graphics and operating system to the most current software supplied by the Contractor. If video detection is to be used, then a multi-camera processor and video viewer shall be supplied. **The master controller shall be in full compliance with the National Transportation communications for Intelligent Transportation System (ITS) Protocol (NTCIP) 1201 and 1202 standards and capable of communicating with the City of Worcester Central Monitoring software**

The system described in this specification is intended for use on arterial highways, crossing arterial or grid systems. The system shall consist of a Central Office Monitor, up to 256 on-street Masters and up to 32 interconnected intersection controllers per on-street master. The Central Office Monitor shall contain the latest software for a fully windows based open architecture closed loop traffic signal system. Each on-street master shall provide up to 2 independent sub-sections. It shall be possible to assign up to 32 intersections in any way distribution among the 2 sub-sections. The system shall be capable of operation as manual, traffic responsive or time of day (TOD). Each sub-section shall operate as an independent sub-section with its own Cycle/Split/Offset commands, traffic responsive algorithm, etc. The video detection shall provide monitoring of the intersection thru the cameras by either a single or multiple cameras mode. Either one or more video displays shall be monitored via a telephone modem or by hard wire connections.

The On-Street Master shall provide the computational power to provide traffic responsive operation, while the Central Office Monitor shall provide monitoring, report generation and data downloading and uploading capability. The local intersection controllers shall implement the selected traffic pattern and provide intersections timing and control. The On-Street Master shall be housed in a local intersection cabinet, as directed by Traffic Engineer. The local intersection cabinet may be required to be replaced to allow for additional space for the master controller unit. If intended as part of an existing closed loop system, the closed loop master controller shall be the same manufacturer as the existing controllers along the corridor to be interconnected. The following detailed electrical and mechanical specifications refer to the On-Street Master unit.

Construction

The unit shall consist of a mainframe suitable for shelf mounting, with appropriate interface harnesses.

Operator programmable data entry shall be accomplished through a menu driven keyboard and display located on the front panel.

Connectors shall be provided for interconnecting all inputs and outputs with their external control circuits.

Timing shall be accomplished by digital methods and with power applied shall use the power line frequency as the time base.

All components shall be operated in accordance with good commercial practice to optimize life and performance.

The design goal shall be such that, under 24 hour a day operating conditions in their circuit applications, all components shall have a life of not less than 5 years.

The circuit reference designation for each component on the printed circuit board shall be clearly marked immediately adjacent to the component.

Electrical

The master controller shall be designed for use on nominal 120 volt, 60 Hz single phase alternating current. It shall operate correctly in the voltage range of 95 to 135 volts AC.

All D-C inputs and outputs shall conform to NEMA TS1 -1983 standards for transition zone, response time, current capability, surge and noise immunity, as well as all other applied electrical specifications.

Environmental

The master controller shall maintain all its programmed functions from -30° F to + 165° F.

The unit shall perform to this specification when operated in relative humidity from 5% to 95%.

The unit shall conform to all applicable portions of the Environmental and Operating Standards as described in the NEMA Standard TS1-1983, Part 2.

Functional

The master control equipment shall be capable of maintaining coordination between all interconnected locations. All controllers shall have internal coordination operation.

The master control equipment shall also be capable of providing a yearly time program for selecting four cycle lengths, four splits, and three offsets plus flashing operation for control of two sub-systems of local controllers. The schedule shall be as included and/or as shown on the plans.

B. ***SYSTEM CAPABILITIES***

1. System Operation

Cycles, Splits, Offsets, Flash, Free

The system shall be capable of implementing any of four (4) cycles, four (4) splits and three (3) offsets. The system shall have the capability of implementing system flash and system free operations. The commands to implement these modes of operation shall be transmitted to the local controllers via a TDM-FSK Communications link.

Intersections:

The system shall have the capability of controlling up to 32 intersections via the TDM-FSK Communications Module. Each intersection shall be equipped with a TDM-FSK Communications Module capable of receiving commands and data from the On-Street Master and transmitting system detector data and local controller's status to the On-Street Master.

System Detectors

The system shall have the capability of accepting and processing data from up to a total of 64 system detectors. The system detector data shall be collected at selected local controllers, from 1 to 8 detectors per intersection, not exceeding a total of 64 per section.

Master Communications

The On-Street Master shall have the capability of two-way communications with the Central Office Monitor. The communications connection on the On-Street Master shall be an RS-232 port. It shall be possible to configure the On-Street Master for a dial up modem or direct RS-232 using a null modem cable.

When using the dial-up method, the On-Street Master shall be capable of dialing four (4) different telephone numbers and restricting calls to each phone user at selectable times of the day.

Downloading

The system shall have the capability of downloading all system information from the Central Office Monitor to the On-Street Master and all intersections timing data from the Central Office Monitor via the On-Street Master to each local intersection. The data shall be loaded into the Central Office Monitor via a keyboard/CRT with menu and prompt features.

System Monitoring of Local Intersections

The Central Office Monitor shall be capable of monitoring the operation of each local intersection. The information needed to perform this function is transmitted from each local intersection to the On-Street Master and then to the Central Office Monitor.

System Monitoring of System Performance

The Central Office Monitor shall have the capability of monitoring the system performance. System parameters shall be stored in the On-Street Master on a real-time basis. This data shall be transmitted to the Central Office Monitor for analysis, logging, display and report generation.

Uploading

The system shall have the capability of uploading to the Central Office Monitor via the On-Street Master, the system and intersection timing data stored in each local intersection controller.

2. Traffic Responsive Mode

Traffic responsive operation shall be controlled by the On-Street Master using traffic volume and occupancy data from up to 64 system sampling detectors.

Pattern Matching Algorithm

The traffic responsive mode shall operate from a “pattern matching” algorithm. A minimum of 48 patterns per On-Street Master shall be selectable. Each “pattern” shall consist of a specified Cycle/Split/Offset to be determined when that pattern is selected. Pattern selection shall be determined by matching actual collected detector information to the various data previously programmed in the Master. The pattern with the “signature” that best fits the actual measured data is selected.

Signature Data

Signature data shall consist of a volume and occupancy assigned to each of 64 detectors per pattern.

System Sampling Detectors

Each of the 64 system sampling detectors shall be capable of being configured as a volume and an occupancy detector. The local intersection controller responsible for each sampling detector shall pre-process the detector data. The system shall collect the sampled data periodically for implementation into the traffic responsive algorithm.

Detector Weighting

Each system sampling detector shall provide a user definable weighting factor from 0 - 100%. This factor will determine the effect that detector has on the traffic responsive algorithm, 0% = no effect, 100% = maximum effect.

Detector Failure

A detector failure routine shall be incorporated into each local controller to determine if any of the 64 sampling detectors are operating outside of their programmed limits; erratic counts, no activity, or constant call. In the event a detector operates outside its limits for one sampling period, the controller will report back to the master that the detector has failed. In the event that more detectors fail than allowed by a programmable value, the On-Street Master shall place the system in time clock command operation. To prevent unwarranted detector failure logging, a means shall be provided at the local controller level to inhibit the lower thresholds limit (e.g. late night) by means of a clock command. A log shall be kept that contains the time any detector has failed.

Traffic Responsive Sampling Period

The sampling period over which each new set of traffic responsive commands is based shall be user definable from 0 - 99 minutes in 1 minute increments. Two additional sampling periods of independent duration’s shall be selectable on a time of day basis.

Free to System Thresholds

For each section, programming entries shall be provided to establish minimum threshold for the transition from free to system (coordinated) operation. These entries shall consist of a minimum volume and a minimum average occupancy. When the traffic responsive mode is activated, one or the other of these minimums must be exceeded or the unit will determine that the traffic level is not sufficient to warrant system operation and will remain free.

3. System Management

Add/Drop Intersections: From a single menu structure, intersections 1 - 32 can be assigned (added and brought on line) to a section, switched to a new section, or dropped from the Master control altogether. When dropped, the intersection will revert to local time base control.

Manual/Auto: From a single menu structure, means shall be provided to manually override each section with a user defined Cycle/Split/Offset. Manual selection will override the traffic responsive or time clock time of day modes.

4. Sync Modes

When in any of the master control modes, either manual, time clock or traffic responsive, the master shall issue Cycle/Split/Offset/System/Flash commands. Local controllers shall provide the following two sync reference modes, either one selectable by the user.

Independent daily reference. Each cycle references (resets) daily to a selectable time of day (typically midnight) and has its own reference to that daily point.

Absolute. Each cycle has its own, one time, user initiated reset point and references continuously from that single point in time. There shall be no daily reference in this mode, only from the single reset point.

5. Time Clock

The internal time clock shall be yearly programmable, consisting of programmed events which are assigned to day programs (24 hours), such day programs being assigned to week programs (7 days), and such week programs assigned to a year program. The real time clock shall operate on a 99 year calendar. The time clock shall be resident in the On-Street Master and shall have the following capabilities:

250 events

daylight savings time enable

99 day programs

99 exception days (holidays adjustments)

10 week programs

1 year program

Time Clock Coordination Control

When enabled to do so, the time clock shall control the coordination command set, thereby selecting the Cycle/Split/Offset and System/Free status in effect based on day program event selections.

Time Clock Internal Function Control

When enabled, it shall be possible to control functions by internal time clock without wiring. These functions shall be programmable as on, off, or automatically controlled by time of day events. Time clock functions shall be separated into groups, “sectional” functions and “global” functions. “Sectional” functions shall be specified on a per section basis and shall only affect local controllers assigned to that section. “Global” functions shall be unit wide, affecting all intersections assigned to the On-Street Master, regardless of section.

Time of Day Controlled Sectional Functions

Time of day controlled sectional functions shall consist of a minimum of the following:

Time clock CSO/system - For the specified section, any combination of cycle 1 - 4, split 1-4 and offset 1-3 shall be selectable by time clock. It shall be possible to program clock selection of CSO during all

periods, even during periods that one of the traffic responsive modes may override clock selection. Thus, clock selected CSO shall always be in a “default” mode when traffic responsive is not enabled

Traffic responsive CSO enabled - For the specified section, cycle, split, offset, and system (coordinated operation) are enabled to be selected by the traffic responsive algorithm.

Traffic responsive CSO enabled if traffic responsive cycle is greater than the clock cycle - For the specified section, if the traffic responsive computed cycle length is greater than the clock selected cycle, then cycle, split, offset, (and system) are enabled to be selected by the traffic responsive algorithm. If the traffic responsive cycle is not greater than the clock selected cycle length, the unit will remain in time clock mode for CSO.

Traffic responsive cycle enable - For the specified section, the cycle (and system) only is enabled to be selected by the traffic responsive algorithm.

Traffic responsive sampling period enable - For the specified section, an alternate traffic responsive sampling period is invoked.

Enable sectional system detector volume logging - For the specified section, system detector volume logging - system detector volume is enabled.

Daylight Saving Adjustment

The unit shall provide an enable/disable option for daylight savings adjustments. When enabled, the unit will automatically adjust daylight savings: forward at 2 AM on the second Sunday in March and back at 2 AM on the first Sunday in November. When disabled, the unit will make no daylight savings adjustments.

Exception Days

Exception day programming shall assign a selected day program to a particular day of the year, which will override the normal programming for that day. To provide the ability to program exception days that are suitable for any year, two types of exception days shall be provided:

Day of week, week of month, month of year specified exception days. This type of exception day shall accommodate holidays such as U.S. Memorial day, which is the last Monday in May, or U.S. Labor Day which is the first Monday in September, etc. These shall be programmed by DOW, WOM, MOY, since they do not fall on the same date every year.

Date specific exception days. This type shall accommodate holidays such as Christmas, January 1st, the U.S. 4th of July, etc. These shall be programmed by date, and fall on the same date each year.

External Time Clock sync

Means shall be provided for external re-synching the internal time clock to a selected value via momentary activation of an input. The re-synching time shall be keyboard programmable, settable to any hour, minute, second of the day.

Clock Set

It shall be possible to manually set the time clock for the current time to the current hour, minute, second, year and date. The On-Street Master shall have the capability of re-synching all local intersections clocks from the clock in the On-Street Master. This re-synch operation shall automatically occur at midnight during the day at regular intervals.

6. Special Function Commands

The master shall be capable of issuing a minimum of 6 special function bits to each of the 32 local controllers once per second. Special function bits 1-6 shall be individually activated in any combination, either by special function clock ckt’s 1-6 or by DC special functions inputs 1-6. Special functions inputs shall be connected through the master harness.

Local controllers interconnected to the On-Street Master shall respond to special functions bits in a user definable manner. For each bit at the local controller, two parameters shall be programmable:

Local controller bit mapping, i.e. the local controller function enable by the bit.

A programmable delay period responding to the bit, 0-255 seconds. The delay shall begin with the first assertion of the bit, but the controller function will not respond until the timer runs out. The function shall then activate and remain activated until reset of the bit by the Master.

NEMA local controller functions enabled by the special function bit mapping. For NEMA controllers interfaced into the system, the following list of functions shall be selectable for response to master special function bits.

Activate auxiliary ck't 1-4 (General purpose time clock ck't)

UCF Flash

Max II select

Inhibit Max per ring

CNA I/II

Min Recall all phases

Place vehicles and pedestrian calls per phase 1-8

Set vehicle and pedestrian omits per phase 1-8

Call Red Rest mode per ring

Omit all Red Clearance per ring

Enable Pedestrian Recycle per ring

Inhibit detector low threshold monitor

Inhibit detector constant call monitor

Enable dual entry

Conditional service enable

Simultaneous gap out inhibit

Disable AC interconnect (enable time base coord)

Lag phases 1,3,5,7

Select Max Plan 1-8

Call pre-empt Sequences 1-6

Enable local volume logging

Activate dimming operation

Force to time clock control (override traffic responsive mode)

The system shall fulfill the requirements specified herein when provided with communications facilities specified in the following paragraphs. There shall be two types of facilities provided, one for communications between the On-Street Master and the local intersections, and the other for communications between the On-Street Master and the Central Office Monitor. Error checking shall be included.

C. ***MEASUREMENT AND PAYMENT***

Payment for these items shall be paid for each item complete in place.

ITEM 618 FIBER OPTIC INTERCONNECTION/ COMMUNICATION CABLE (LINEAR FOOT)

A. ***GENERAL***

Work under this item consists of furnishing and installing all materials, equipment, appurtenances and making electrical connections for interconnecting traffic signal controllers to the On-Street Master. The installation shall be in conformance with the applicable provisions of Section 800 of MSSHB.

The interconnect fiber optic cable shall be 12 single mode, outside plant loose tube. The cable shall utilize a single layer polypropylene tube and shall use super absorbent polyester tape in place of gel for water blocking. The pair shall meet or exceed the following requirements:

Each controller cabinet shall contain a distribution panel Fibertron FTW024 or equal. All fibers shall be terminated at distribution panel in each cabinet, using ST connectors.

The total length shall not exceed six (6) miles.

Impedance of 600 ohms resistive and balanced.

Envelope delay distortion shall be less than 1750 microseconds in the band from 800 to 2600 Hz.

Frequency response referred to 1000 Hz from 300 to 3000 Hz shall be flat-3, +12 dB. Response reference to 1000 Hz from 500 to 250 Hz shall be flat-2, +8 dB.

Insulation between any conductor and ground shall be at least 20 megohms DC and 50 Kohms AC from 300 to 3000 Hz.

Capable of transmitting a signal of not less than +10 dBm (average).

Noise level shall be no more than -62 dBm.

Non-linear (harmonic distortion, fundamental to first harmonic of 25 dB minimum, fundamental to third harmonic of 30 dB minimum.

Breakdown between any conductor and ground shall be greater than 1500V rms at 60Hz.

Minimum receiving level at most distant point shall be no less than -16 dBm at 0 dBm input power.

The contractor shall install the proposed interconnect cable through the dedicated conduit solely for the purpose of interconnecting cable. He shall make all necessary electrical connections in the controller cabinets and the connections to the controller shall be made with a standard RS232 connector or Fiber optic connector. When fully connected, the master controller shall generate and transmit information through the interconnecting system to all interconnected local controllers.

Splices shall not be permitted. Installation of the cable shall be that straight through pulls in hand holes and pull boxes designated for interconnecting cable. At least five (5) feet of cable shall be coiled in each pull box or hand hole to facilitate future maintenance. All interconnect cable shall be appropriately terminated in each control cabinet including lightning and surge protection for each conductor in each cabinet.

B. ***MEASUREMENT AND PAYMENT***

Payment for this item shall be paid by linear foot complete in place.

*SECTION 700 - ****

SECTION 800 - STREET LIGHTING

ITEM 804.2 2 INCH ELECTRICAL CONDUIT (FOOT) TYPE NM – PLASTIC – (NEMA) FOR STREET LIGHTING

ITEM 804.21 ADDITIONAL 2 INCH ELECTRICAL CONDUIT (FOOT) TYPE NM – PLASTIC – (NEMA) FOR STREET LIGHTING WITHIN THE SAME TRENCH

A. *GENERAL*

The work under this item shall conform to the relevant portions of Section 801 (MSSHB) and the following:

The work shall include the furnishing and the installation of 2 inch non-metallic conduit for the street lighting system in accordance with the plans and as directed by the Engineer.

The conduit material shall be Schedule 40 polyvinyl chloride (PVC plastic conduit).

The length of conduit estimated under this item is for the comparison of bids only and is not guaranteed by the Engineer; it may be increased or decreased by the Engineer depending upon the actual conditions encountered as provided for in Section 4.06 (MSSHB).

B. *MATERIALS*

Rigid Plastic Conduit

Schedule 40 PVC conduit of the sizes shown on the plans shall be used throughout the project. Minimum size shall be 2" I.D. Raceways and fittings shall be produced by the same manufacturer. National Grid may have specific requirements as to what manufacturers they carry available spare parts for. Therefore, one manufacturer will be listed as preferred with their catalog numbers reflected, with the second listing being National Grid's acceptable equal.

The rigid plastic conduit must conform to and meet all current requirements and testing procedures of the American Society of Testing and Materials wherever such standards and test shall apply. The following ASTM standards shall apply as applicable.

ASTM Specification D1784 – Schedule 40 PVC Cell Classification

ASTM Specification D2564 – Specification for Solvent Cements for PVC Plastic Pipe and Fittings.

All belled-end pipes shall have tapered sockets to create an interference-type fit, which meet or exceed the dimensional requirements and the minimum socket length for pressure-type sockets as defined in ASTM D2672.

PVC conduit manufacturers capable of meeting the specifications are Carlon, or approved equal.

C. *FITTINGS*

Provide all necessary couplings and elbows necessary for a complete system.

All conduits where the possibility of moisture or dirt is present shall be provided with Carlon PVC plugs, or approved equal, for 2" I.D. conduit.

All sweeps into lighting fixture bases shall be per the manufacturer's requirements.

Except where embedded in concrete, direct burial or indicated elsewhere in the contract documents, all conduits shall be supported to permit adequate lineal movement to allow for expansion and contraction of conduit due to temperature change.

D. *CONSTRUCTION METHODS*

The PVC conduit shall be installed in a trench as described in Section 801.60 (MSSHB). Refer to trench details for backfill requirements, warning tape and other requirements above the PVC conduits.

E. *INSTALLATION*

When crossing streets and driveways the conduit shall be encased with a minimum of 4 inches of concrete on all sides, extending a minimum of two (2) feet beyond the roadway or driveway access point of the conduit.

A polypropylene pull rope sized to properly support the installation of required electrical conductors shall be installed in all conduits.

Conduits entering pull boxes and/or handholes shall be terminated a minimum of two inches inside the wall of the pull box and/ or handhole.

All conduit installed in pull boxes and/or handholes shall be installed in knockouts or openings provided in the box. Any conduit installed in such a manner as to block complete access to any other conduit shall be removed and reset at the contractors own expense.

F. ***MEASUREMENT AND PAYMENT***

Payment under this item will be as Linear Feet.

2 inch Schedule 40 Electrical Conduit Type NM Plastic (NEMA) will be paid for at the contract unit bid price per linear foot installed, which price shall include all labor, material, tools and equipment for furnishing and installing conduit, fittings, bends, sweeps, clamps, plugs, couplings, all trench excavation (except rock), backfilling, concrete encasement, pull ropes, and all incidental costs required to complete the work.

ITEM 804.3 3-INCH ELECTRICAL CONDUIT (FOOT) TYPE NM PLASTIC (UL)ITEM 804.31 ADDITIONAL 3-INCH ELECTRICAL CONDUIT (FOOT) TYPE NM PLASTIC (UL) IN THE SAME TRENCH

ITEM 804.4 4-INCH ELECTRICAL CONDUIT (FOOT) TYPE NM PLASTIC (UL)

ITEM 804.41 ADDITIONAL 4-INCH ELECTRICAL CONDUIT (FOOT) TYPE NM PLASTIC (UL) IN THE SAME TRENCH**GENERAL**

The work under this Item shall conform to the relevant provisions of Section 801 (MSSHB) and the following:

The work shall include the furnishing and installation of 3-inch non-metallic conduit for traffic signal systems in accordance with the plans and as directed by the Engineer.

The conduit material shall be Schedule 40 polyvinyl chloride (PVC) plastic conduit.

The length of conduit estimated under this Item is not guaranteed by the Engineer; it may be increased or decreased by the Engineer depending upon actual conditions encountered as provided for in Section 4.06 (MSSHB).

Where new conduits are installed in existing grass areas outside the limits of grading, the work shall include the placement of a minimum of 4 inches of topsoil and sod to restore the disturbed areas to their original condition. No separate payment will be made for this work, but all costs in connection therewith shall be included in the unit price bid.

Where conduit is installed in existing sidewalk or paved median areas to remain, the work shall include replacement of the gravel base material and the surface pavement to match preconstruction conditions. No separate payment will be made for this work, but all costs in connection therewith shall be included in the unit price bid.

When conduit is installed in cold plane and overlaid pavement, the trenches shall be sawcut through their full depth and the pavement removed. The conduit shall be placed on a sand bed and backfilled with excavatable controlled density fill conforming to Subsection M4.08.0 (MSSHB).

Where a telephone communications conduit is specified, a separate conduit shall be provided from the controller cabinet to the telephone manhole as shown on the plans. The Contractor shall provide a pull- string in the conduit for the telephone line. The Contractor shall be responsible for coordinating with the telephone company for installing the conduit into the telephone manhole.

B. ***CONDUIT CROSSING ROADWAYS***

All conduits crossing the roadway shall be encased in Class C cement concrete with a minimum 9 inches of cover. Trenches in existing bituminous concrete pavements not subject to full depth reconstruction shall be saw cut to a 3-foot 6-inch width. The existing pavements shall be saw cut through their full depth and the pavement removed. Trench depth shall be a minimum of 3 feet. Backfill material shall consist of CDF Type IE excavatable flowable fill.

After conduit installation and backfill is complete, a 1 - foot (minimum) of high early strength cement concrete base course material cap shall be placed over the trench area. If the trench excavation or backfill operations have widened the top trench to the extent that a minimum of 12 inches of undisturbed soil is not available to support the concrete cap, the pavement shall be saw cut again and removed to provide the 12-inch width.

The finish grade of the concrete cap shall be 3.25 inches below existing pavement surface. One 1.75-inch lifts and one 1-1/2 inch lift of bituminous concrete pavement SUPERPAVE (binder and top course material) shall be placed over the concrete cap. If the existing pavement is to be resurfaced, then the concrete shall be finished flush with the existing surface.

No separate payment will be made for saw cutting, excavation and concrete, but all costs in connection therewith shall be included in the linear foot unit price bid for this item.

C. *MEASUREMENT AND PAYMENT*

Electrical Conduit will be paid for at the Contract unit price per foot, which price shall include sawcutting, excavation, ordinary borrow, gravel borrow, wood plank/ warning tape, sand bedding, all labor, materials, equipment and incidental costs required to complete the work.

Excavatable Controlled Density Fill will be paid for separately under Item 485.1.

ITEM 806.2 2 INCH ELECTRICAL CONDUIT (FOOT)

ITEM 806.21 ADDITIONAL 2 INCH ELECTRICAL CONDUIT (FOOT) IN THE SAME TRENCH

A. *GENERAL*

The work under this item shall conform to the relevant portions of Section 801 (MSSHB) and the following:

The work shall include the furnishing and the installation of 2 inch metallic conduit for the street lighting system in accordance with the plans and as directed by the Engineer.

The length of conduit estimated under this item is for the comparison of bids only and is not guaranteed by the Engineer; it may be increased or decreased by the Engineer depending upon the actual conditions encountered as provided for in Section 4.06 (MSSHB).

B. *MATERIALS*

Rigid Metal Conduit

Rigid Metal conduit of the sizes shown on the plans shall be heavy wall zinc coated steel. Minimum size shall be 2” I.D. Raceways and fittings shall be produced by the same manufacturer. National Grid may have specific requirements as to what manufacturers they carry available spare parts for. Therefore, one manufacturer will be listed as preferred with their catalog numbers reflected, with the second listing being National Grid’s acceptable equal.

The rigid metal conduit must conform to the following standards applied as applicable.

American National Standard Institute C80.1.

Federal Specification WW-C-581e

UL Specification No. 6

National Electrical Code Article 346

C. *FITTINGS*

Provide all necessary couplings, elbows, and fittings necessary for a complete system.

Elbows, couplings, nipples, and other required fittings shall match the construction material of the rigid metal conduit. Couplings for rigid metal conduit shall be threaded type and rain proof.

All sweeps into lighting fixture bases shall be per the manufacturer’s requirements.

D. *CONSTRUCTION METHODS*

The rigid metal conduit shall be installed in a trench as described in Section 801.60 (MSSHB). Refer to trench details for backfill requirements, warning tape and other requirements above the rigid metal conduits.

E. *INSTALLATION*

When crossing streets and driveways the conduit shall be encased with a minimum of 4 inches of concrete on all sides, extending a minimum of two (2) feet beyond the roadway or driveway access and egress points of the conduit.

A polypropylene pull rope sized to properly support the installation of required electrical conductors shall be installed in all conduits.

Conduits entering pull boxes and/or handholes shall be terminated a minimum of two inches inside the wall of the pull box and/ or handhole.

All conduit installed in pull boxes and/or handholes shall be installed in knockouts or openings provided in the box. Any conduit installed in such a manner as to block complete access to any other conduit shall be removed and reset at the contractors own expense.

F. *MEASUREMENT AND PAYMENT*

2 inch Electrical Conduit Type RM Steel (Galvanized) will be measured for payment by the linear foot of conduit installed.

2 inch Electrical Conduit Type RM Steel (Galvanized) will be paid for at the contract unit bid price per linear foot installed, which price shall include all labor, material, tools and equipment for furnishing and installing conduit, fittings, bends, sweeps, clamps, plugs, couplings, all trench excavation (except rock), backfilling, concrete encasement, pull ropes, and all incidental costs required to complete the work.

ITEM 810.2 ELECTRIC HANDHOLE PRECAST CONCRETE (EACH)

ITEM 810.3 PULL BOX 12”X24” (SD 2.031) FOR SIGNAL CABLE (EACH)

ITEM 810.4 PULL BOX 12”X12” (SD 2.030) FOR INTERCONNECTION CABLE (EACH)

A. *GENERAL*

The work under this item shall conform to the relevant portions of Section 801 (MSSHB) and the following:

The work shall include the furnishing and the installation of precast concrete electric handholes for street lighting system and traffic signal system shall be in accordance with the plans and as directed by the Engineer.

The quantity of handholes estimated under this item is for the comparison of bids only and is not guaranteed by the Engineer; it may be increased or decreased by the Engineer depending upon the actual conditions encountered as provided for in Section 4.06 (MSSHB).

All pull boxes shall be a pre-cast concrete with cast iron covers. The 12”x 24” pull boxes shall have the word “W.D.P.W.” stamped on the covers; the 12”x 12” pull boxes shall have “TRAFFIC” stamped on the covers and be used only for interconnection cable. The top of all pull boxes shall be flush with the finish grade.

B. *MATERIALS*

Refer to the plans for the details of the precast concrete electric handholes.

Precast concrete electric handholes shall meet the requirements of Section 801.61.C (MSSHB).

C. *CONSTRUCTION METHODS*

All electric handholes shall be constructed per Section 801.61.C (MSSHB), except as deviations may be required based on field conditions. All deviations must be approved by the engineer prior to making any changes.

Electric handhole frames and covers shall be set flush with finish grade.

D. *INSTALLATION*

Electric handholes shall be placed per the plans and shall be positioned using an approved grade so that the frame and cover are flush with the finish grade. Provisions shall be made so that adjustment can be made to the frame and cover to close any opening between the frame and precast handhole to prevent any contaminants or moisture from entering.

Furnish and install a gravel base, as per the plan, compact and level for placement of the precast concrete handhole.

Furnish and install a minimum of four (4) galvanized steel bolts of sufficient size and length to secure the frame to the precast concrete electric handhole. The bolts must be placed to allow for proper and sufficient adjustment of the frame and cover as necessary to make the frame and cover flush to finish grade.

Furnish and install a 5/8” X 8’ long copper clad ground rod, a grounding clamp, and 3 feet of bare #4AWG wire in each electric handhole.

The electrical handhole shall be left free and clear of any foreign matter.

E. ***MEASUREMENT AND PAYMENT***

Electric Handhole Precast Concrete (Municipal Standard) will be paid for at the contract unit bid price per each installed, which price shall include all labor, material, tools and equipment for furnishing and installing precast concrete electric handholes, cement mortar mix, galvanized threaded rod, galvanized bolts, galvanized nuts and washers, ground rod, clamp, wire, gravel base, compaction and leveling, leveling frame and cover, all excavation (except rock), backfilling, and all incidental costs required to complete the work.

ITEM 811.2 ELECTRIC LOAD CENTER BASE CONCRETE (EACH)

A. ***GENERAL***

The work under this item shall conform to the relevant portions of Section 801 (MSSHB) and the following:

The work shall include the furnishing and the installation of concrete load center base for street lighting system in accordance with the plans and as directed by the Engineer.

The quantity of electric load center base estimated under this item is for the comparison of bids only and is not guaranteed by the Engineer; it may be increased or decreased by the Engineer depending upon the actual conditions encountered as provided for in Section 4.06 (MSSHB).

B. ***MATERIALS***

Refer to the plans for the details of the concrete electric load center base.

Concrete electric load center bases shall meet the requirements of Section 801.62 (MSSHB).

C. ***CONSTRUCTION METHODS***

All concrete electric load center bases shall be constructed per Section 801.62 (MSSHB), except as deviations may be required based on field conditions. All deviations must be approved by the engineer prior to making any changes.

D. ***INSTALLATION***

Concrete electric load center bases shall be placed per the plans and shall be positioned using an approved grade so that the top of the concrete is 6 inches above the finish grade.

Furnish and install a gravel base, as per the plan, compact and level for placement of the concrete electric load center base.

Furnish and install a minimum of four (4) ¾” galvanized steel anchor rods, as shown on the plans, of sufficient length to secure the electric load center cabinet to the concrete base.

Furnish and install a 5/8” X 10’ long copper clad ground rod, a grounding clamp, and 4 feet of bare #6 AWG wire in each electric load center cabinet.

E. ***MEASUREMENT AND PAYMENT***

Electric Load Center Base Concrete will be paid for at the contract unit bid price per each installed, which price shall include all labor, material, tools and equipment for furnishing and installing concrete electric load center base, cement mortar mix, galvanized threaded rod, galvanized bolts, galvanized nuts and washers, ground rod, clamp, wire, gravel base, compaction and leveling, all excavation (except rock), backfilling, and all incidental costs required to complete the work.

ITEM 812.2 LIGHT STANDARD FOUNDATION CONCRETE (EACH)

A. ***GENERAL***

The work under this item shall conform to the relevant portions of Section 801 (MSSHB) and the following:

The work shall include the furnishing and the installation of concrete light standard foundation for street lighting system in accordance with the plans and as directed by the Engineer.

The quantity of light standard foundations estimated under this item is for the comparison of bids only and is not guaranteed by the Engineer; it may be increased or decreased by the Engineer depending upon the actual conditions encountered as provided for in Section 4.06 (MSSHB).

B. ***MATERIALS***

Refer to the plans for the details of the light standard foundations.

Light standard foundation concrete shall meet the requirements of Section 801.62 (MSSHB).

C. *CONSTRUCTION METHODS*

All light standard foundations shall be constructed per Section 801.62 (MSSHB), except as deviations may be required based on field conditions. All deviations must be approved by the engineer prior to making any changes.

D. *INSTALLATION*

Light standard foundations shall be placed per the plans and shall be positioned using an approved grade so that the top of the concrete is as indicated on the plans in comparison to finish grade.

Furnish and install 20 inch sonotube, reinforcing rods and hoops, as shown on the plans, and per the Structural Engineers recommendations. Confirm exact light fixture pole base anchor requirements with the manufacturer prior to furnish and installation and install accordingly.

Furnish and install a 5/8" X 10' long copper clad ground rod, a grounding clamp, and #8 ribbon braid ground conductor.

Furnish and install 2" rigid steel conduit, stubbed out from base, as shown on the plans.

E. *MEASUREMENT AND PAYMENT*

Light Standard Foundation Concrete will be paid for at the contract unit bid price per each installed, which price shall include all labor, material, tools and equipment for furnishing and installing light standard foundation, cement mortar mix, galvanized reinforcing rod and hoops, galvanized threaded rod, galvanized bolts, galvanized nuts and washers, 2" rigid metal conduit, elbows, and sweeps, ground rod, clamp, wire, compaction and leveling, all excavation (except rock), backfilling, and all incidental costs required to complete the work.

ITEM 813.31 CONDUCTOR #2 AWG (FOOT)

ITEM 813.32 CONDUCTOR #6 AWG (FOOT)

ITEM 813.33 CONDUCTOR #8 AWG (FOOT)

A. *GENERAL*

The work under this item shall conform to the relevant portions of Section 813 (MSSHB) and the following:

The work shall include the furnishing and the installation of conductors (wiring) for the street lighting system in accordance with the plans and as directed by the Engineer.

The length of the conductors estimated under this item is for the comparison of bids only and is not guaranteed by the Engineer; it may be increased or decreased by the Engineer depending upon the actual conditions encountered as provided for in Section 4.06 (MSSHB).

B. *MATERIALS*

The conductors shall be new and shall have the size, grade and insulation, voltage and manufacturer's name permanently marked on the outer covering at regular intervals. The conductors are to be in complete reels or coils with clear markings identifying type, size and insulation. All conductors shall be protected from weather and damage during storage and handling.

The conductors shall meet UL type RHH-RHW rated for the application per the National Electrical Code.

All wire, connectors, splices, etc. shall be rated for the application per the NEMA, or UL, whichever is applicable. All material and workmanship shall conform to the requirements of the NEC, Standards of ASTM for Testing and Materials, USA Standards, and any local ordinances which may apply.

Wire size shall be based on American Wire Gauge (AWG), as applied to copper conductors.

C. *CONSTRUCTION METHODS*

All conductors shall be installed per Section 813 (MSSHB), except as deviations may be required based on field conditions. All deviations must be approved by the engineer prior to making any changes.

D. *INSTALLATION*

Installation of conductors (wiring) shall not begin until such time as the conduit has been successfully tested and verified, meeting the requirements of Section 801.60 (MSSHB) Conduit, Paragraph H. Testing Installation.

All conductors shall be installed in conduit by hand, without damaging the cover, sheath, insulation or wires. No conductor installation shall commence until such time as all work which may cause damage to the conductors has been completed. When installing conductors into conduit, conductors shall be pulled into conduit freely without any bends, kinks, twisting or lapping. All conductors in a particular conduit shall be pulled at the same time, fed from unobstructed, free moving reels. Powdered soapstone, talcum or other approved lubricant may be used to assist in installation of the conductors in the conduit.

Splices in conduit shall not be allowed. All conductors are to be continuous between electric handholes. A splice shall be installed in each conductor at each and every handhole with a minimum of 2 feet of slack coiled with each handhole (2 feet of slack will be measured from the top of the cover, extending out of the handhole).

All splices, taps, and wire terminals shall be secured with materials and methods hereinafter specified and as per Section 813.60 of the Standard Specifications.

E. *SPLICING*

Splices shall be made per the requirements of Section 813.60 (MSSHB) Wire and Cable, C Splicing.

Splices shall be made in handholes and control cabinets only.

The conductors shall be joined by the use of terminal lugs, listed by UL, and meeting all requirements of the NEC and Massachusetts Electrical Code.

Splices shall be insulated and waterproofed.

F. *CIRCUIT IDENTIFICATION*

All incoming and outgoing wires in street lighting control boxes, handholes, and light bases shall be banded and labeled per Section 813.60 (MSSHB) Wire and Cable, D. Highway Lighting Circuit Identification.

G. *TESTING*

Prior to energizing any circuit or conductor, complete testing as required within Section 813.62 (MSSHB) Ground Electrodes B. Resistance Tests.

H. *MEASUREMENT AND PAYMENT*

Conductors #2 AWG, #6 AWG, and #8 AWG will be paid for at their respective contract unit bid price per foot, which prices shall include all labor, material, tools and equipment, connectors, splices, sealing and waterproofing, for furnishing and installing conductors in conduit, handholes, manholes, light fixtures, and cabinets and all incidental costs required to complete the work.

ITEM 813.80 ELECTRICAL SERVICE (LINEAR FOOT)

A. *GENERAL*

The work under this item shall conform to the relevant portions of Section 813 (MSSHB) and the following:

The work shall include the electric service connections from the utility company point of service to the lighting control cabinet for the street lighting system in accordance with the plans and as directed by the Engineer.

B. *MATERIALS*

Refer to the specifications provided herein for conduit, conductor and handhole requirements.

C. *CONSTRUCTION METHODS*

Electric service shall be coordinated with the local utility company providing power to the area.

Electric service shall conform to all utility company policies and practices. All back charges from the utility company to the contractor shall be paid for by the contractor and shall be included within this pay item. Service connections shall be coordinated and installed in accordance with the local utility company requirements as provided by the utility company.

Each service shall include a three wire single phase solid neutral service conductors, conduits, conduit risers, core drilling and sealing of manholes, and splicing connections required to complete the installation. Meters will be furnished and installed by the local utility company.

D. ***MEASUREMENT AND PAYMENT***

Electric Service payment will be measured for payment by linear foot of conduit between service location and the lighting control cabinet.

Electric Service will be paid for at the contract unit bid price per foot, which prices shall include all labor, material, tools and equipment, conduit, conductors, sweeps, bends, couplings, connectors, splices, sealing and waterproofing, for furnishing and installing conductors in conduit, handholes, manholes, core drilling and sealing and all incidental costs required to complete the work.

ITEM 820 DECORATIVE STREET LIGHTING

A. ***GENERAL***

The post, base, arm, luminaire, accessories, and finish shall adhere to the following details or approved equal.

B. ***MEASUREMENT AND PAYMENT***

Payment under this item shall be at the contract unit bid price per each location.

Variant LED Series AVPL2 20LEDE70 MVOLT 4K R2 AY P7, NL-RW14 RFD210292

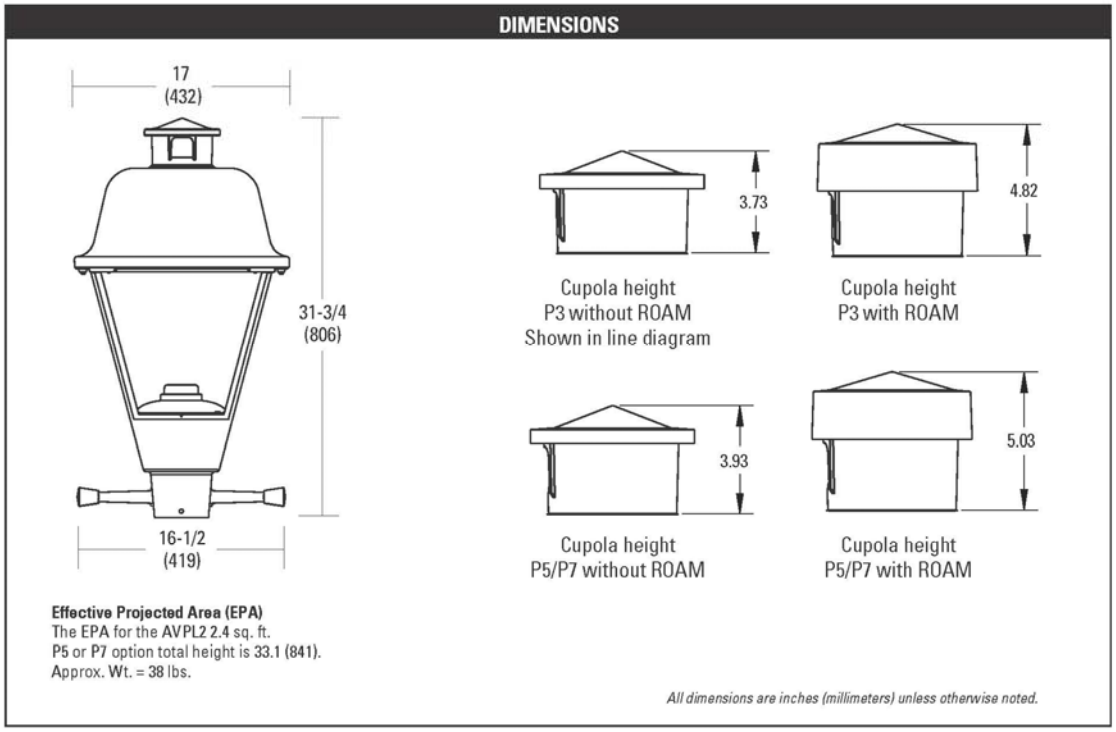

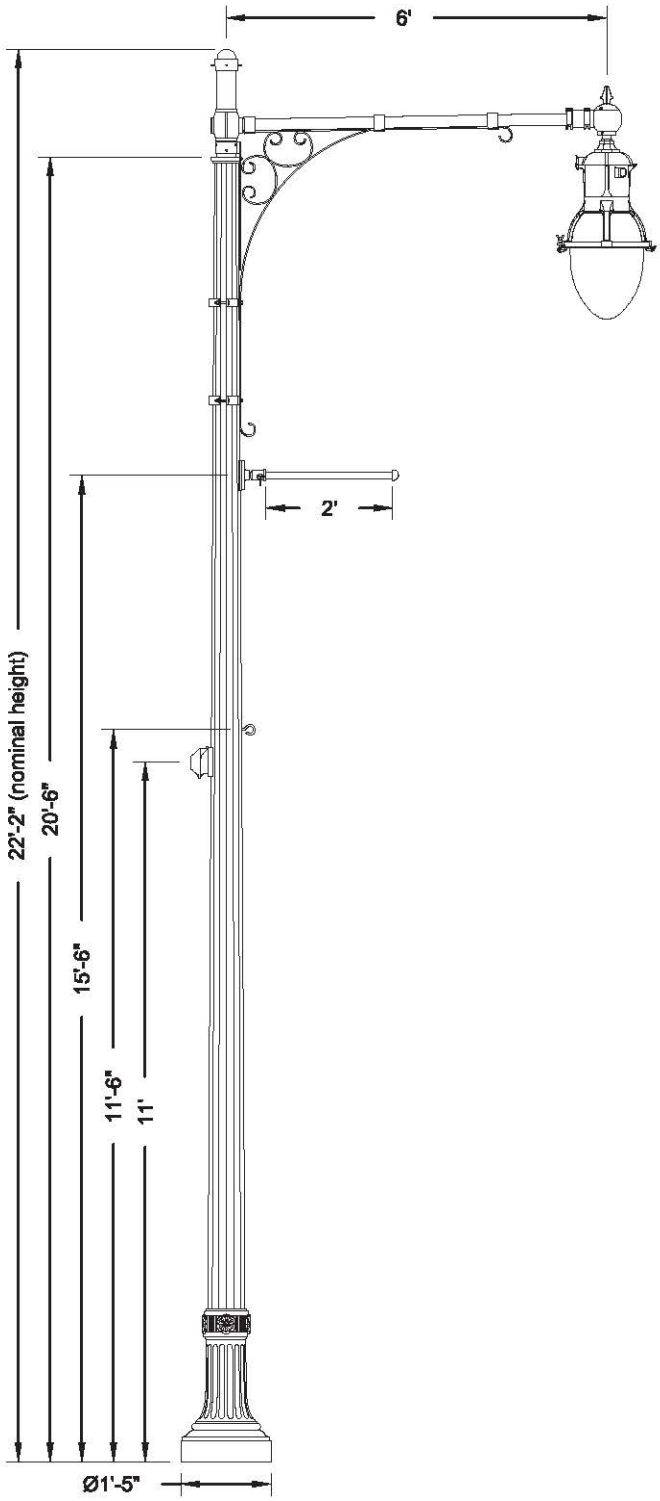

Specifications

POS T DESCRIPTION

The lighting post shall be cast iron and steel construction, massively tapered with a deep, 16-flute steel shaft and a classic 16-flute cast iron base. The post shall be provided with (1) OUC single arm, 45" from post center to luminaire center, (1) Boston Harbour QSM leveling fitter factory attached to the luminaire, (1) 24" breakaway banner arm, (1) bolt on eyebolt and (1) GFI weatherproof receptacle with large, in-use cover.

MATERIALS

The post material shall be ASTM A48, Class 30 cast iron, formed true to the pattern with complete detail. All esoised hardware shall be stainless steel. Anchor bolts to be completely hot dip galvanized. Partially galvanized bolts are not acceptable.

DIMENSIONS

The post shall be 20'-8" in height with a 17" diameter base. The post shall taper from a Ø7" at the top of the base to a Ø4.5" at the post top. An integral Ø3"x4" tenon shall be provided at the top for arm mounting.

INSTALLATION

The post shall be provided with four 3/4" DIA, hot dip galvanized L-type anchor bolts. A door shall be provided in the base for anchorage and wiring access. A grounding screw shall be provided inside the base opposite the door.

FINISH

The entire post assembly shall be standard Holophane black.

LUMINAIRE DESCRIPTION

- Memphis Teardrop LED 2 Series
- 12,000 Lumens w/Uplight, 4 COBs, 4000k CCT, Auto-Sensing Voltage (120-277)
- Black finish, Teardrop glass, Type 3 Asymmetric, Quick Lock Stem mount

Accessory Mounting Detail

	Orientation	Height
BANNER ARM	0°	15'-6"
EYEBOLT	0°	11'-6"
RECEPTACLE	180°	11'-0"

Anchorage Detail

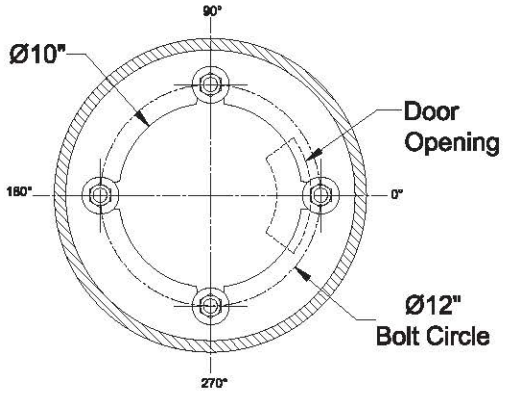

DO NOT USE TO SET ANCHOR BOLTS
CONTACT CUSTOMER SERVICE FOR TEMPLATE

Catalog #'s:

RFD209410

Lum/Lamp: MPL2P20U40KASBKTG3S BHDF13200BKP7 FACT ATT
Arm: CAM72/1CABKH
Pole: NYS21FTB17P05BK R132C S186A E138A
Receptacle: FGIUL-SBKH
Banner Arm: BBA24BOH4MXXBK
Eyebolt: BAEB
Anchor Bolts: AB-31-4

"CUSTOMER: PLEASE VERIFY PLACEMENT OF ACCESSORIES IN THE "ACCESSORY MOUNTING DETAIL" TABLE - INFORMATION NECESSARY FOR ENSURING ORDER IS PLACED AS NEEDED."

Customer Signature **Date**

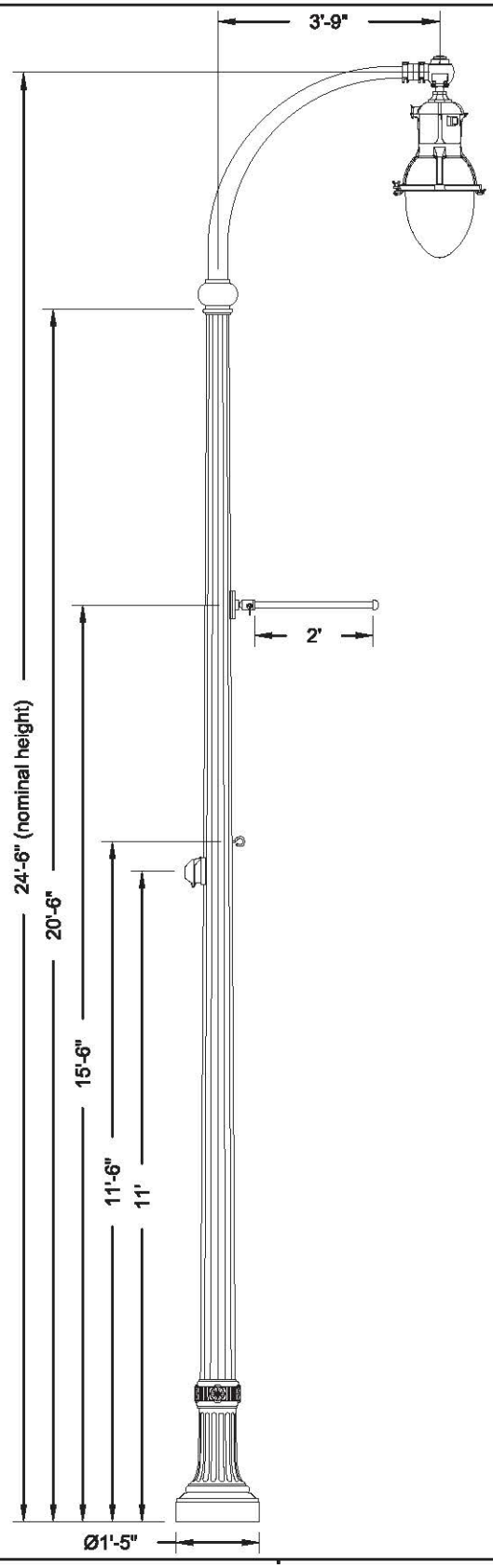

Specifications

POST DESCRIPTION
The lighting post shall be cast iron and steel construction, massively tapered with a deep, 16-flute steel shaft and a classic 16-flute cast iron base. The post shall be provided with (1) OUC single arm, 45" from post center to luminaire center, (1) Boston Harbour QSM leveling fitter factory attached to the luminaire, (1) 24" breakaway banner arm, (1) bolt on eyebolt and (1) GFI weatherproof receptacle with large, in-use cover.

MATERIALS
The post material shall be ASTM A48, Class 30 cast iron, formed true to the pattern with complete detail. All esoised hardware shall be stainless steel. Anchor bolts to be completely hot dip galvanized. Partially galvanized bolts are not acceptable.

DIMENSIONS
The post shall be 20'-6" in height with a 17" diameter base. The post shall taper from a Ø7" at the top of the base to a Ø4.5" at the post top. An integral Ø3.5"x6" tenon shall be provided at the top for arm mounting.

INSTALLATION
The post shall be provided with four 3/4" DIA, hot dip galvanized L-type anchor bolts. A door shall be provided in the base for anchorage and wiring access. A grounding screw shall be provided inside the base opposite the door.

FINISH
The entire post assembly shall be standard Holophane black.

LUMINAIRE DESCRIPTION
- Memphis Teardrop LED 2 Series
- 12,000 Lumens w/Uplight, 4 COBs, 4000k CCT, Auto-Sensing Voltage (120-277)
- Black finish, Teardrop glass, Type 3 Asymmetric, Quick Lock Stem mount

Accessory Mounting Detail

	Orientation	Height
BANNER ARM	0°	15'-6"
EYEBOLT	0°	11'-6"
RECEPTACLE	180°	11'-0"

Anchorage Detail

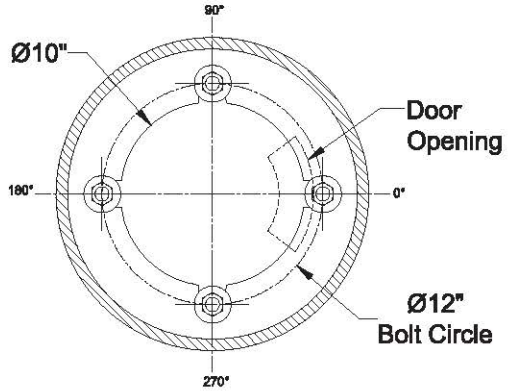

DO NOT USE TO SET ANCHOR BOLTS
CONTACT CUSTOMER SERVICE FOR TEMPLATE

Catalog #'s:
RFD209418
Lum/Lamp: MPL2P20U40KASBKTG3S BHDF13200BKP7 FACT ATT
Arm: OUC45/1CABKH
Pole: NYS21FTB17P15BK R132C S186A E138A
Receptacle: FGIUL-SBKH
Banner Arm: BBA24BOH4MXXBK
Eyebolt: BAEB
Anchor Bolts: AB-31-4

"CUSTOMER: PLEASE VERIFY PLACEMENT OF ACCESSORIES IN THE "ACCESSORY MOUNTING DETAIL" TABLE - INFORMATION NECESSARY FOR ENSURING ORDER IS PLACED AS NEEDED."

Customer Signature **Date**

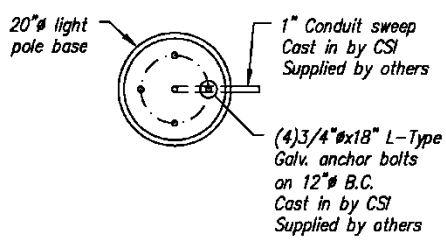

PLAN

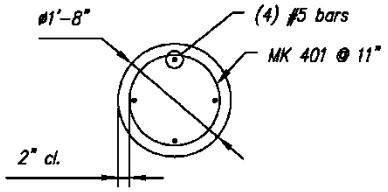

REINFORCING DETAIL

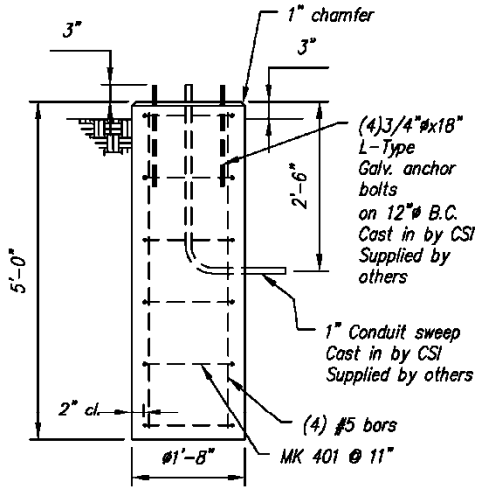

ELEVATION

PRECAST CIRCULAR CONCRETE LIGHT POLE BASE

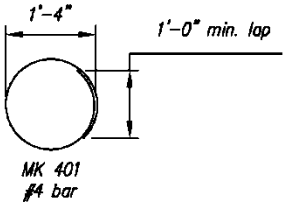

BENDING SCHEDULE

GENERAL NOTES:

1. Concrete Strength f'c = 4000 psi.
2. Reinforcing Steel: ASTM A615 (rebar) grade 60
3. Contractor to supply anchor bolts, template, conduit sweeps and ground wire conduit. Quantity, size and location of conduit sweeps to be provided to CSI upon or prior to approval of this drawing.
4. Contractor to provide a list of variations (if any) of conduit orientations and/or other variations prior to approval of 20"ø base.

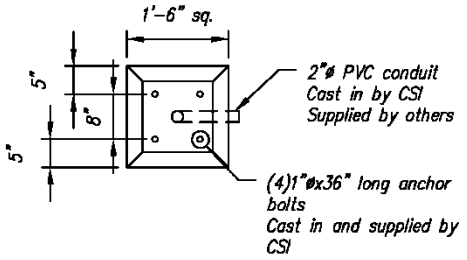

PLAN

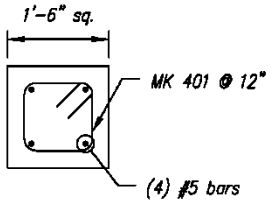

REINFORCING DETAIL

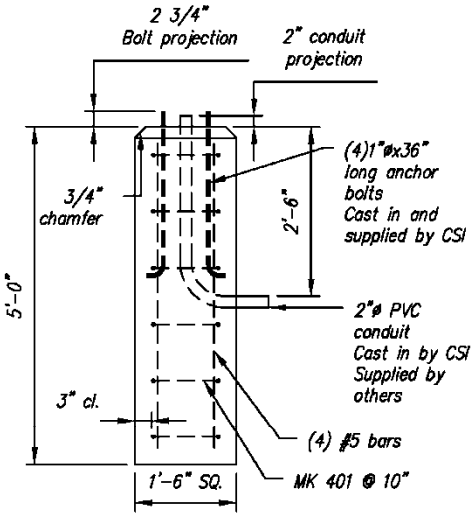

ELEVATION

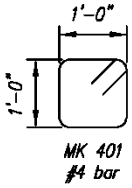

BENDING SCHEDULE

GENERAL NOTES:

1. Concrete Strength f'c = 4000 psi.
2. Reinforcing Steel: ASTM A615 (rebar) grade 60
3. Sweeps supplied by others, cast in by CSI.

PRECAST SQUARE CONCRETE LIGHT POLE BASE

ITEM 821 STREET LIGHT

A. ***HORIZONTAL ROADWAY LUMINAIRES***

Figure 1 - Semi-cutoff Luminaire Figure 2 - Cutoff Luminaire

1. APPLICATION – Enclosed, horizontal roadway luminaires are the standard luminaires available for use in roadway lighting installations for streets in the City of Worcester.

2. SPECIFICATION – All high intensity discharge, horizontal roadway luminaires shall conform to the following specification, including Table I below:

General – Luminaire, high intensity discharge, enclosed, horizontal roadway, Autobahn Series ATBM (or approved equivalent) in accordance with ANSI C136.14, latest issue.

IES Light Distribution – Luminaires shall have a lamp socket setting that provides a light distribution pattern as specified in Tables I – III, and shall be in accordance with the latest edition of RP-8. Photometric data shall be provided to the Standards Engineering Department upon request.

Mounting Provision – Luminaire shall include a slip-fitter designed for attachment to a pipe tenon with an outside diameter of 1-1/4 to 2 inches. Slip-fitter shall have a minimum insertion length of 4-3/4 inches and shall include an internal stop to prevent over insertion. Provision shall be made for adjustment of an installed luminaire a minimum of 3 degrees above or below the horizontal. Mounting hardware shall be mechanically galvanized, zinc chromate plated, or stainless steel, and shall be rigid to prevent slippage or rotation of the luminaire in relation to the tenon.

Housing – Luminaire housing shall be die cast aluminum with a hinged lower door assembly. All housing parts shall fit together without excessive voids or openings. The lower door latch shall provide positive indication that the lower door is securely closed and shall provide no-tool access to the lamp compartment. The lower door hinge shall be designed so that a free-swinging door will not accidentally disengage from the upper housing. The lower door shall be removable without the need for tools.

Finish / Color(s) - Luminaire housing shall be painted, both inside and outside, using powder coat paint. Paint finish shall be smooth, semi-gloss. Color shall be GRAY – (RAL #7038).

Wildlife Guard – Luminaire shall have a factory installed wildlife guard designed to prevent animal entry into the luminaire housing. The wildlife guard shall be designed to be difficult to remove to insure it being in place at the time of installation.

Reflector / Refractor – Luminaire shall include a polished, gasketed, reflector designed so that with the lower luminaire door closed, dirt, dust, bugs, etc., cannot enter the lamp compartment. Luminaire shall have a refractor as specified in Tables I through III, and in accordance with ANSI C136.17, latest issue.

Labeling – Luminaire and ballast shall be labeled in accordance with ANSI C136.22, latest issue, for lamp and ballast wiring diagrams. Wiring diagram shall be mounted in a visible location and shall be permanent. Luminaire shall be externally labeled on the lower housing door with a color-coded wattage label in accordance with ANSI C136.15, latest issue. 240 volt and 277 volt luminaires shall have an additional label on the lower housing door to identify the operating voltage. Pulse start metal halide luminaires shall have an additional label on the lower housing door with the legend “PULSE START”. Manufacturer, date of manufacture, supply voltage, lamp type and wattage, shall be identified on the luminaire nameplate.

Terminal Block – Luminaire shall be provided with a three positions, dead back, terminal block with captive screws and washers and mounted such that #14 to #8 AWG stranded copper source conductors can be easily be installed by a lineperson wearing rubber gloves. Luminaire housing shall be grounded with a green conductor connected to the middle terminal.

Photoelectric Control Receptacle – Luminaire to include a 360° adjustable, twistlock, photoelectric control receptacle in accordance with ANSI C136.10, latest issue, but without photoelectric control. Photoelectric control receptacle shall have tin plated bronze contacts.

Ballast – Luminaire shall include a ballast of the type specified in Tables I – III. All ballast shall conform to ANSI 82.4, latest issue. Ballast shall be capable of starting and operating the lamp within manufacturers' specified limits. During normal lamp failure modes, ballast must protect itself. Ballasts specified as "reactor" shall be capable of operating on circuits regulated to within ± 5% of line voltage. Ballasts specified as "regulated" shall be capable of operating on circuits regulated to within ± 10% of line voltage.

Starting Aid – When required, luminaire shall be provided with a socket and field replaceable plug in solid state starting aid mounted in an easily accessible location.

Capacitor – All capacitors, when used, shall be clearly be labeled "NON-PCB". Label shall be visible in final capacitor mounting location.

Lamp Socket - Lamp socket shall be a 600-volt class (per ANSI C-136.2, latest edition), mogul base design with a nickel-plated bronze screw shell and center contact. Lamp socket shall be in accordance with ANSI C136.11, latest issue. Screw shell shall prevent lamp unseating from vibration. Lamp socket housing shall be glazed porcelain. Lamp position shall be horizontal.

Shipping – Each luminaire shall be individually boxed and supported during shipment to prevent damage. Shipping carton shall include a label with the luminaire description, manufacturers catalog number, and a one line drawing depicting the shape of the luminaire.

Wireless Controller – A wireless controller shall be attached to each fixture installed, including decorative fixtures. This controller shall be CIMCON Lighting, Inc. iSLC-3100-7P (or equivalent).

3. ITEM ID – Light Emitting Diode Horizontal Roadway Luminaires – See Table I

TABLE I

ORDERING INFORMATION

Example: ATBM A MVOLT R2

Series

ATBM Autobahn LED Roadway

Performance Packages

A 7,000 lumens
B 8,000 lumens
C 9,000 lumens
D 11,600 lumens
E 13,400 lumens
F 15,700 lumens
G 16,600 lumens
H 17,400 lumens

Voltage

MVOLT Multi-volt, 120-277V
347 347V
480 480V

Optics

R2 Roadway Type II
R3 Roadway Type III
R4 Roadway Type IV
R5 Roadway Type V

Mounting

(Blank) 2 Bolt Mounting
4B 4 Bolt Mounting

Options

Color Temperature (CCT)
(Blank) 4000K CCT, 70 CRI Min.
5K 5000K CCT, 70 CRI Min.

Paint
(Blank) Gray
BK Black
BZ Bronze
DDB Dark Bronze
GI Graphite
WH White

Surge Protection
(Blank) Acuity SPD
MP MOV Pack[1]
IL SPD with Indicator Light

Miscellaneous Options
HSS House Side Shield
NL NEMA Label Indicating Wattage
XL Not CSA Certified – No Terminal Block Cover

Control Options
(Blank) 3 Pin NEMA Photocontrol Receptacle
P5 5 Pin Photocontrol Receptacle
P7 7 Pin Photocontrol Receptacle
NR No Photocontrol Receptacle
AO Field Adjustable Output
DM 0-10V Dimmable Driver
PCSS Solid-State Lighting Photocontrol
PCLL Solid-State Long Life Photocontrol
PCCC Solid-State Long Life Photocontrol with remote control on/off
SH Shorting Cap

Packages
(Blank) Standard Pack
JP Job Pack (36/pallet)

Accessories
ATBMHSS House Side Shield
ATBMLTS Light Trespass Shield
RKATBMMVOLTSPD ATBM Acuity SPD Replacement Kit MVOLT
RKATBMHVSPD ATBM Acuity SPD Replacement Kit 347/480V
RKATBMMVOLTMP ATBM MOV Pack Replacement Kit
RKATBMMVOLTIL ATBM IL SPD Replaement Kit

Notes:
1. Not available with G and H performance packages.

4. ITEM ID – Light Emitting Diode Horizontal Roadway Luminaires – See Table II.

TABLE II

PERFORMANCE PACKAGE

Performance Package	Distribution	4000 K CCT			LLD @ 25°C		
		Lumens	Input Watts	LPW	50K Hours	75K Hours	100K Hours
A	R2	7,114	60	118	89	84	80
	R3	7,024		117			
	R4	6,958		116			
	R5	7,469		124			
B	R2	8,090	70	115	89	84	80
	R3	8,016		114			
	R4	7,924		113			
	R5	8528		121			
C	R2	9031	81	112	89	84	80
	R3	8,942		111			
	R4	8,827		110			
	R5	9,517		118			
D	R2	11,769	95	124	90	87	84
	R3	11,690		123			
	R4	11,534		121			
	R5	12,388		130			
E	R2	13,601	115	118	90	87	84
	R3	13,416		117			
	R4	13,323		116			
	R5	14,263		124			
F	R2	15,932	133	120	90	86	83
	R3	15,741		118			
	R4	15,476		116			
	R5	16,691		125			
G	R2	17,102	150	114	90	86	83
	R3	16,974		113			
	R4	16,635		111			
	R5	17,938		119			
H	R2	18,085	164	111	90	86	83
	R3	17,929		110			
	R4	17,439		107			
	R5	18,966		116			

Note: Specifications subject to change without notice. Actual performance may differ as a result of end-user environment and application.

5. ITEM ID – Non-Standard Horizontal Roadway Luminaires – See Table III and IV.

TABLE III

ORDERING INFORMATION

Example: ATBS A MVOLT R2

Series

ATBS Autobahn LED Roadway & Security

Performance Packages

A	1,900 lumens
B	3,200 lumens
C	3,800 lumens
E	4,700 lumens
F	5,400 lumens
G	6,100 lumens
H	7,100 lumens
I	8,500 lumens

Voltage

MVOLT Multi-volt, 120-277V

Optics

R2	Roadway Type II
R3	Roadway Type III
R5	Roadway Type V
D2	Type II, Drop Refractor included
D3	Type III, Drop Refractor included
D5	Type V, Drop Refractor included

Options

Color Temperature (CCT)

(Blank)	4000K CCT, 70 CRI Min.
3K	3000K CCT, 70 CRI Min.
5K	5000K CCT, 70 CRI Min.

Paint

Blank	Gray (Standard)
BK	Black
WH	White
BZ	Bronze

Surge Protection

Standard 10kV/5kA SPD

Blank	Acuity SPD-10kV/5kA with inductive filter (Standard)
MP	MOV Pack
IL	SPD with Indicator Light

Misc.

HSS	House Side Shield
NL	NEMA Label
XL	Not CSA Certified

Controls

(Blank)	3 Pin NEMA Photocontrol Receptacle
NR[1]	No Photocontrol Receptacle
DM[2]	0V-10V Dimmable Driver
P5	5 Pin Photocontrol Receptacle (dimmable driver included)
P7	7 Pin Photocontrol Receptacle (dimmable driver included)
PCSS[1]	DTL DSS Photocontrol
PCL1[1]	DTL DLL Photocontrol 120-277V
AO	Field Adjustable Output
SH	Shorting Cap

Install Packages

PKGS	DTL DSS Photocontrol
PKGL	DTL DLL Photocontrol

Packages ship with selected photocontrol, 24", 1 1/4" diameter arm, 5' of prewire and mounting hardware

Accessories

ATBSREF	Drop Refractor for field installation
ATBSHSS	House Side Shield for field installation
ATBSLTS	Light Trespass Shield for field installation

Notes

1. Not available with Install Packages.
2. Not available with AO option.

TABLE IV

PERFORMANCE PACKAGE

Performance Package	Distribution	Lumens	Input Watts	LPW	50K Hours	LLD @ 25°C 75K Hours	100K Hours
A	R2	1,978	19	104	0.93	0.89	0.85
	R3	1,972		104			
	R5	2,033		107			
	D2	1,884		99			
	D3	1,860		98			
	D5	1,933		102			
B	R2	3,166	24	132	0.93	0.89	0.85
	R3	3,167		132			
	R5	3,336		139			
	D2	3,015		126			
	D3	2,988		124			
	D5	3,175		132			
C	R2	3,784	31	122	0.93	0.89	0.85
	R3	3,780		122			
	R5	4,029		130			
	D2	3,604		116			
	D3	3,566		115			
	D5	3,835		124			
E	R2	4,770	40	119	0.93	0.89	0.85
	R3	4,704		118			
	R5	4,867		122			
	D2	4,543		114			
	D3	4,438		111			
	D5	4,650		116			
F	R2	5,392	47	115	0.93	0.89	0.85
	R3	5,407		115			
	R5	5,175		110			
	D2	5,135		109			
	D3	5,101		109			
	D5	5,051		107			
G	R2	6,235	50	125	0.94	0.92	0.90
	R3	6,101		122			
	R5	6,404		128			
	D2	5,938		119			
	D3	5,756		115			
	D5	6,193		124			
H	R2	7194	60	120	0.94	0.92	0.90
	R3	7,141		119			
	R5	7,508		125			
	D2	6,851		114			
	D3	6,737		112			
	D5	7,150		119			
I	R2	8,653	76	114	0.94	0.92	0.90
	R3	8,525		112			
	R5	9,003		118			
	D2	8,241		108			
	D3	8,042		106			
	D5	8,574		113			

Note: Information shown above is based on 4000K nominal system data. Individual fixture performance may vary. Specifications subject to change without notice.

B. ***PRECAST CONCRETE STREET LIGHTING FOUNDATION 11½" BOLT CIRCLE – FOR ROADWAY CLASS POLES***

Specifications

1. APPLICATION - This STANDARD covers precast concrete street lighting foundations used for mounting all anchor bases, roadway class street lighting poles that have an 11-1/2" bolt circle.

2. SPECIFICATION - All precast concrete foundations with an 11-1/2" bolt circle shall conform to the following specification, including Figure 1.

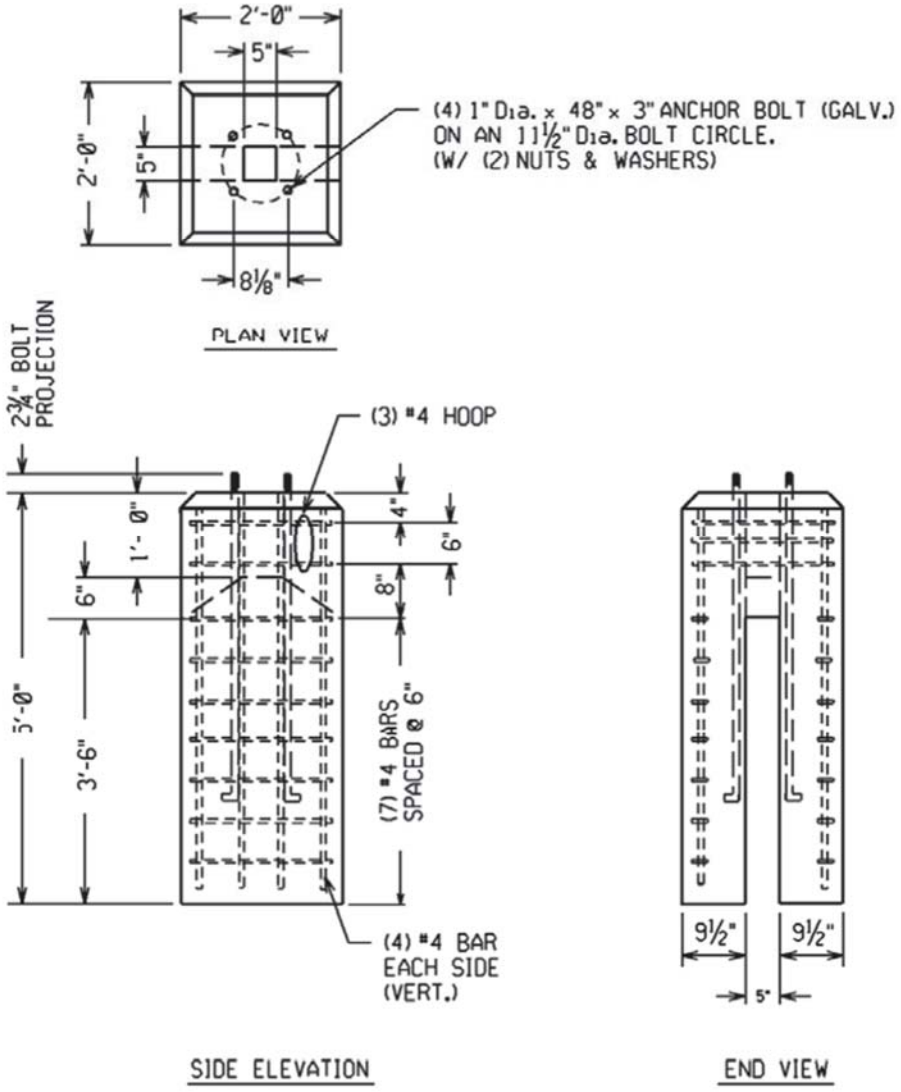

Figure 1 – Precast Concrete Street Lighting Foundation - 11½" Bolt Circle

General - Precast concrete street lighting foundation, overall size = 24 inch square x 60"depth, with 45 degree chamfer around top edge. Approximate weight = 2,500 pounds.

Minimum Concrete Strength - 5,000 PSI @ 28 days. Type III.

Steel Reinforcement - Steel reinforcement rods shall be #4 bars – ASTM A615 Grade 60, and in accordance with Figure 1.

Anchor Bolt Detail - Provide four 1-inch diameter x 48" x 3" "L" shaped galvanized steel anchor bolts, each one with (2) heavy hex head nuts and (2) round washers. All hardware shall conform to ASTM A36, A563, and

F844, respectively and shall be hot-dip galvanized per A153. Bolt circle diameter shall be 11-1/2-inch. Each anchor bolt shall have a minimum 12-inch thread length and shall project 2-3/4-inches above the top of the foundation.

Wiring Access - Provide a 5-inch x 5-inch opening in the center of the foundation for conduit installation by others, as shown in Figure 1.

3. ITEM ID - See Table I.

TABLE I

Standard Item	Item ID	Description
SF10	5821035	Precast Concrete Street Lighting Foundation – for roadway class poles with an 11-1/2” bolt circle.

C. *ANCHOR BASE, PENDANT ARM, STREET LIGHTING POLES, ALUMINUM SPECIFICATIONS*

1. APPLICATION – Anchor base, aluminum, pendant streetlighting poles are available for outdoor lighting installations supplied by underground wiring. Typical applications are in commercial "downtown" areas and along main highways.

2. SPECIFICATIONS - All anchor base, aluminum, pendant streetlighting poles shall conform to the following specifications, including Figures 1, 2, 3, 4, and Table 1.

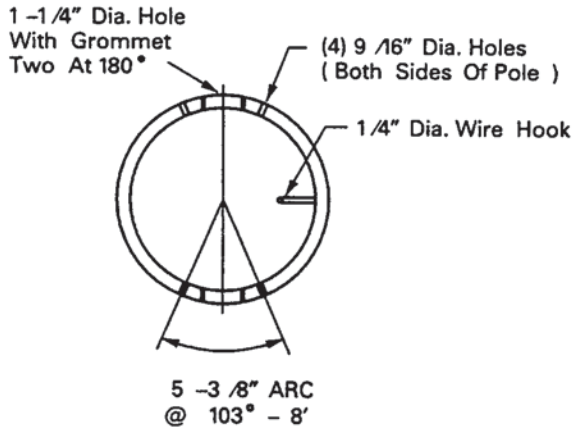

Figure 1 – Pole Top Detail
(Top View)

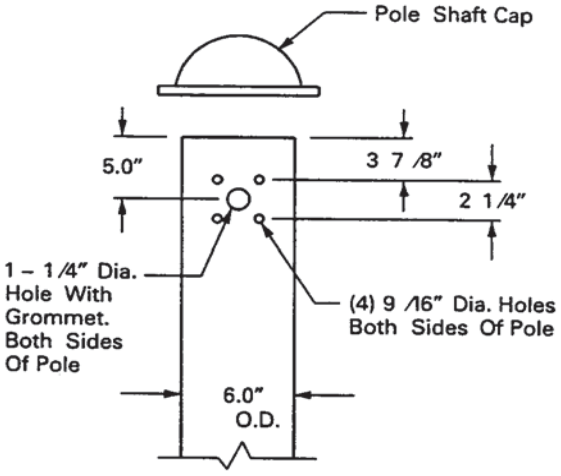

Figure 2 – Pole Top Detail
(Side View)

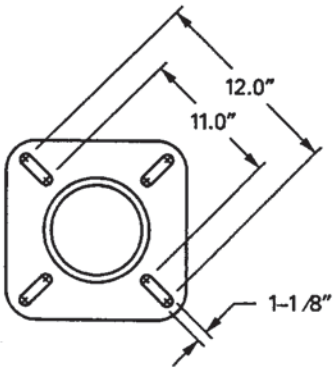

Figure 3 – Base Flange Detail

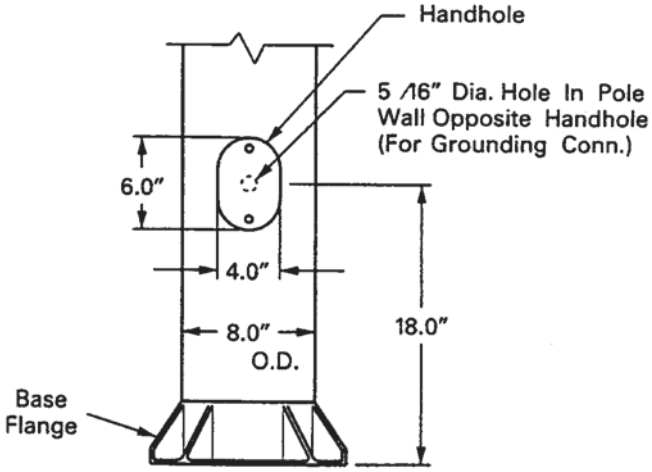

Figure 4 – Handhole Detail

General - Pole, aluminum, anchor base, pendant, for roadway lighting use. Includes base flange, handhole, grounding provision, shaft cap, and arm attachment hardware. Pole height as specified.

Base Flange - The base flange shall be a one piece cast aluminum alloy, joined to the shaft by complete circumferential welding. The base flange shall include four 1⅛" diameter slotted holes, to enable pole installation on a precast concrete foundation with four 1" diameter anchor bolts arranged in an 11½" bolt circle. Anchor bolts are to be supplied by others. Four 1/16" aluminum shims and four aluminum anchor bolt covers, including stainless steel attachment hardware shall be included with every pole. The anchor bolt covers shall provide adequate inside clearance to cover 1" diameter anchor bolts with a 2¾" projection above the top of the precast concrete foundation. The central area of the base flange shall be open to allow wiring access.

Handhole - Every pole shall be provided with a 4" x 8" oval shaped handhole centered 18 inches above the bottom of the shaft, and located 90 degrees from the plane of the luminaire arms as viewed from the pole top. Handhole shall be reinforced with a cast aluminum frame. Handhole cover shall be secured by two stainless steel pinned Allen head attachment screws.

Grounding - Pole shall be furnished with one 5/16" hole positioned opposite the center line of the handhole and one Fargo # 5006-P connector for grounding purposes.

Shaft: The pole shaft shall be a seamless, round tapered tube, and shall be full length heat treated after welding to produce a T6 temper. The outside diameter shall be 8.0" at the base and taper to 6.0" at the top. See Table 1 for nominal wall thickness. A ¼" diameter wire hook shall be welded to the inside of the shaft, at the pole top, to provide mechanical support for the luminaire wiring.

Finish / Color - The shaft shall have a satin etched finish, free of dents and scratches and requiring no surface preparation, painting, or maintenance.

Festoon Outlet - When specified, pole shall be provided with a single outlet box mounted in a welded frame with a weatherproof hinged cover located 15'-0" above the base flange on the same face of the pole as the handhole. Electrical receptacle shall be provided by others.

Strength - Pole shall meet latest AASHTO requirements for intended use. At minimum, pole shall be capable of supporting two horizontal roadway style luminaires (each one with an effective projected area of 2.0 square feet and weighing 80 pounds), each one mounted on a 12-foot truss style arm, when subjected to a sustained 90-MPH wind.

Welding - All welding shall be shop welded using the inert gas shielded metal arc method with consumable electrode in accordance with AWS Specification D1.2, Structural Welding Code – Aluminum.

Arm Attachment - The shaft shall be factory drilled to enable installation of two luminaire arms mounted 180 degrees apart. Factory drilling for each arm shall include four 9/16" holes for arm attachment and one 1¼" diameter gromotted hole for wiring access. See Figures 1 and 2 for arm attachment details. An aluminum plate shall be provided which blanks off one set of arm attachment holes in the event only one arm is to be installed. The plate shall be provided attached in place on the pole using (4) ½" x 1-1/2" long stainless steel hex head bolts, nuts, washers, & lock washers.

Shaft Cap - A cast aluminum cap shall be provided with each pole. The cap shall be attached to the pole shaft by means of three stainless steel screws mounted 120 degrees apart.

Identification - Every pole shall be identified with the manufacturer's I.D. on the base flange in a location where the manufacturer can easily be determined when the pole is installed on a precast concrete foundation.

Shipping / Protection - Poles shall be blocked, supported, and protected during shipment to prevent warping, excessive flexure, abrasion or damage to the finish. All hardware, fasteners, handhole doors, and accessory attachments shall be shipped installed in place. All poles shall be shipped on a flatbed truck.

Drawings - Manufacturer shall provide detailed drawing(s) of the pole with all component parts. Drawing shall include one general drawing depicting the pole with all critical dimensions and materials identified; a list identifying the quantity and description of all accessory materials, and when appropriate, an exploded view of all to-be-assembled parts showing the proper sequence of assembly. Drawing shall also include information to enable the user to identify the pole's maximum capacity with respect to arm and luminaire effective projected area and weight loading when subjected to a sustained 90 MPH wind. Drawing shall also include the weight in pounds of the pole. When requested, manufacturer shall submit product samples for Standards Department evaluation.

3. ITEM ID – See Table I.

TABLE I

STANDARD	ITEM ID	DESCRIPTION	NOMINAL WALL
ST01F	0811022	25 Foot, Anchor Base, Aluminum, Pendant, Street Lighting Pole	0.156 inches
ST01F1	0810919	25 Foot, Anchor Base, Aluminum, Pendant, Street Lighting Pole with Festoon Outlet	0.188 inches
ST01G	5821833	30 Foot, Anchor Base, Aluminum, Pendant, Street Lighting Pole	0.188 inches
ST01G1	9202005	30 Foot, Anchor Base, Aluminum, Pendant, Street Lighting Pole with Festoon Outlet	0.250 inches
ST01H	5821834	35 Foot, Anchor Base, Aluminum, Pendant, Street Lighting Pole	0.250 inches

D. *STREETLIGHT ARMS FOR ALUMINUM PENDANT POLES, SPECIFICATIONS*

1. APPLICATION – Aluminum streetlight arms are used to install horizontal roadway luminaires on aluminum pendant poles.

2. SPECIFICATIONS - All aluminum streetlight arms for aluminum pendant poles shall conform to the following specifications, including Figures 1 and 2 and Table I.

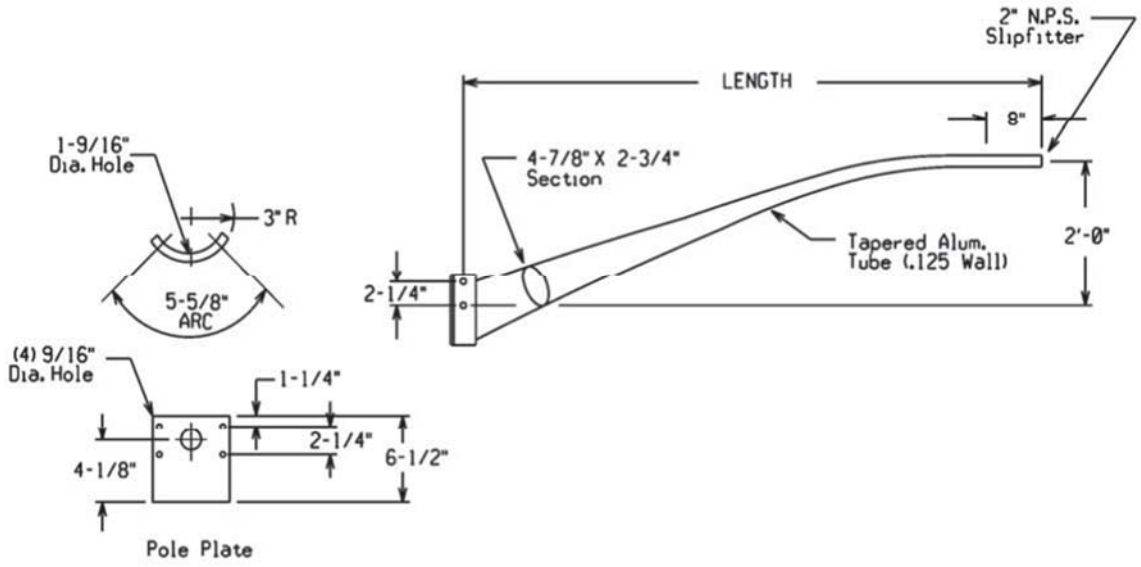

Figure 1 – Tapered Elliptical Aluminum Arm

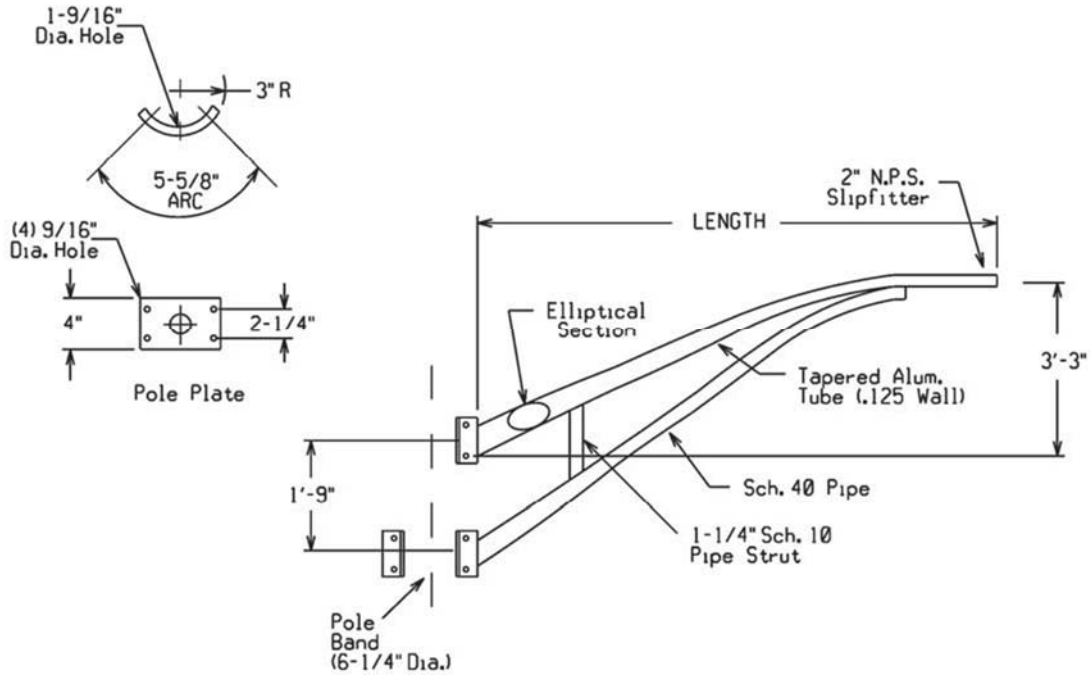

Figure 2 – Tapered Truss Aluminum Arm

General - Arm, streetlight, aluminum, for installation on aluminum pendant pole. Arms shall be in accordance with Figures 1 or 2, and Table 1.

Pole Attachment - All arms shall be designed to be attached to an aluminum pole with an outside diameter of 6.0 inches.

TAPERED ELLIPTICAL ARMS - These arms shall have one welded, fixed pole plate. This plate shall accommodate attachment to the aluminum pole with (4) ½" x 1½" long, stainless steel, hex head bolts, nuts, washers, and lock washers. All hardware is to be provided attached in place on the arm.

TAPERED TRUSS ARMS - Each truss member shall have a fixed, welded pole plate. The upper pole plate shall accommodate attachment to the aluminum pole with four ½" x 1½" long, stainless steel, hex head bolts, nuts, washers and lock washers. The lower pole plate shall clamp around the perimeter of the pole using a pole band and (4) ½" x 2½" long stainless steel, hex head, bolts, nuts, washers and lock washers. All hardware is to be provided attached in place on the truss arm.

Luminaire Attachment - The luminaire end of all arms shall accommodate a horizontal roadway style luminaire. The arm tenon shall be 2" O.D. and be in accordance with ANSI C136.3, latest issue.

Finish / Color - All arms shall have a natural finish, free of dents and scratches, and requiring no surface preparation, painting, or maintenance.

Wiring Access - All arms shall accommodate internal wiring. All pipe ends which will carry conductors shall be chamfered to avoid cutting or nicking the wiring insulation. Tapered truss arms shall use the upper truss member as the wiring path.

Welding – All aluminum welding shall be shop welded using inert metal-arc welding process in accordance with A. W. S. Specification D10.7, latest issue. Filler metal shall conform to the A. W. S. Specification A5.10, latest issue.

Strength - All arms shall be rated capable of supporting a horizontal roadway luminaire with a maximum weight of 80 pounds and a maximum effective projected area of 2.0 square feet when subjected to a sustained 90 MPH wind.

Identification - All arms shall be permanently stamped in a field readable location near the pole end with the manufacturer I.D. and date of manufacturer.

Shipping / Protection – Arms shall be blocked, supported, and protected during shipment to prevent any damage to the arm.

Drawings – Manufacturer shall submit detailed drawings of each arm with all component parts. Drawing shall include all dimensions, material specifications, manufacturing and welding procedures. Drawing shall also include a table showing the maximum effective projected area and maximum weight luminaire that each arm can support based on a sustained 90 MPH wind. Drawing shall also include the weight, in pounds, of each arm. When requested, manufacturer shall submit product samples for Standards Department evaluation.

3. ITEM ID - See Table I.

TABLE I

E. *MEASUREMENT AND PAYMENT*

STANDARD	ITEM ID	DESCRIPTION
ST01X1	0811023	6 Foot Tapered Elliptical Arm for Aluminum Pendant Pole
ST01X2	0811024	8 Foot Tapered Elliptical Arm for Aluminum Pendant Pole
ST01X3	0811026	10 Foot Tapered Truss Arm for Aluminum Pendant Pole
ST01X4	0811025	12 Foot Tapered Truss Arm for Aluminum Pendant Pole
ST01X5	9202269	16 Foot Tapered Truss Arm for Aluminum Pendant Pole

Payment for this item shall be paid per each, complete in place.

ITEM 821.20 STREET LIGHTING CONTROL LOAD CENTER (EACH)

A. *GENERAL*

The work under this item shall conform to the relevant portions of Section 820 (MSSHB) and the following:

The work shall include the furnishing and installation of Street Lighting Control Load Center with all control equipment for the street lighting system in accordance with the plans and as directed by the Engineer.

The quantity of street lighting control load center estimated under this pay item is for the comparison of bids only and is not guaranteed by the Engineer; it may be increased or decreased by the Engineer depending upon the actual conditions encountered as provided for in Section 4.06 (MSSHB).

B. *MATERIALS*

Refer to the plans for all specific materials associated with the street lighting control load center. All material is as stated on the plans or approved equal.

C. *CONSTRUCTION METHODS*

Street lighting control load center shall be installed per Section 820 (MSSHB), and per applicable codes, using the material specified or approved equals.

D. *MEASUREMENT AND PAYMENT*

Street Lighting Control Load Center will be measured for payment by each complete, functioning unit in place.

Street Lighting Control Load Center will be paid for at the contract unit bid price per each, which price shall include all labor, material, tools and equipment, for furnishing and installing NEMA Cabinet, main breaker panel with main breaker, service panel with all required breakers, lighting contactor, lightening arrestor, conduit, time clock, auto-control switch, grounding, wireways, light, switches, receptacles, meter socket, and all incidental costs required to complete the work.

ITEM 822 SPOT DIGS (EACH)

A. *GENERAL*

A Spot Dig includes all work related to an excavation to repair a streetlight cable fault. This includes the investigation of and finding the fault, laying out the excavation work, mobilization of the excavation crew, saw cutting/jack hammering, excavating, repairing the fault, road plating (if necessary), verifying the problem is fixed, proper and appropriate backfill and compaction or control density fill (when necessary). Includes all labor, all materials, all latent subsurface conditions and any time needed to coordinate or work in conjunction with National Grid or their designee when necessary.

B. *MEASUREMENT AND PAYMENT*

Payment under this item shall be at the contract unit bid price per each location.

SECTION 900 - LUMP SUM RESERVE

ITEM 900 LUMP SUM RESERVE FOR CITY USE

A. ***GENERAL***

1. **Lump Sum Reserve for Contingency Work** - The Contractor is advised that the lump sum reserve for contingency work shall be utilized, as required by the City of Worcester, for additional work that may be required by the City and agreed to by the Contractor. Any reserve balance remaining at the end of the contract will return to the City of Worcester.

2. **Lump Sum Reserve for Testing** - The Contractor is advised that, where indicated by the City of Worcester, independent laboratory tests may be required of materials incorporated into the project. The tests will be performed by an independent laboratory selected by the City and compensated for directly by the City under the Lump Sum Reserve for Testing items. The Contractor is to cooperate fully with the City to make available any material and samples necessary to perform the independent tests. Upon completion of the contract all amount not utilized will return to the City of Worcester.

3. **Lump Sum Reserve for Traffic Police** - The Contractor is advised that the City of Worcester will designate the number and need for Traffic Police throughout the duration of the contract. The City will compensate directly for Traffic Police, as ordered, under the Lump Sum Reserve for Traffic Police. Upon completion of the contract all amount not utilized will return to the City of Worcester.