LEGEND:

N/F=NOW OR FORMERLY
ETW = EDGE OF TRAVEL WAY
EOEP = EDGE OF EXISTING PAVEMENT
EOP = EDGE OF PAVEMENT

DMH = DRAIN MANHOLE
SMH = SEWER MANHOLE

FG = FINISH GRADE
FGX540 = FINISH GRADE (SPOT SHOT)
TOW = TOP OF WALL
BOW = BOTTOM OF WALL
S.F.=SQUARE FEET
PB = PLAN BOOK
PL = PLAN
BK = BOOK
PG = PAGE
DTH = DEEP TEST HOLE
P= PERC TEST HOLE

PROP=PROPOSED
TEMP=TEMPORARY

PAR = PARCEL
B-3 = SOIL BORING (TYPICAL)

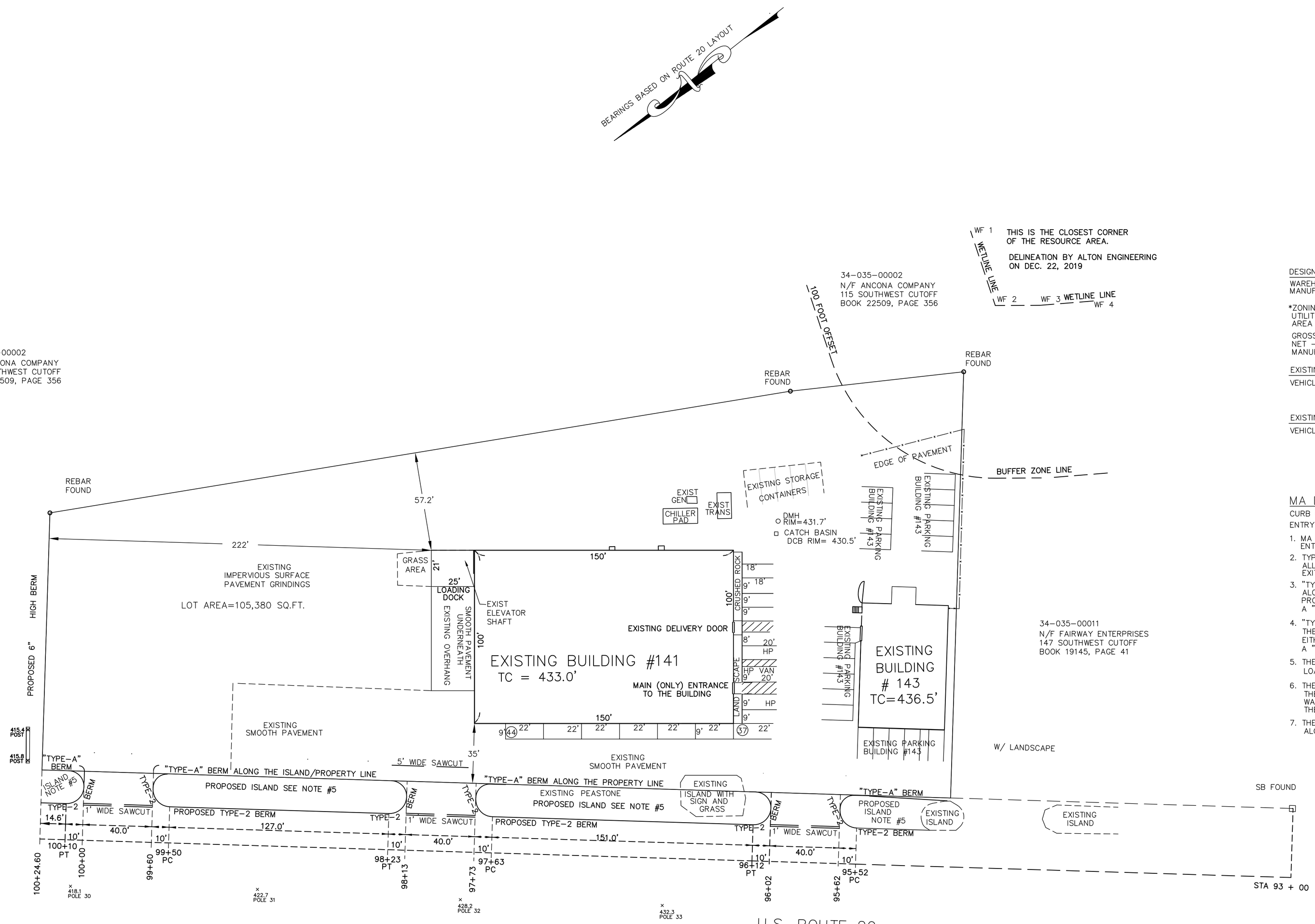

DESIGNATION OF EXISTING BUILDING USE – SPACES REQUIRED

WAREHOUSE – 1 VEHICLE SPACE PER 3,000 SF IS REQUIRED
MANUFACTURING – 1 VEHICLE SPACE PER 1,000 SF IS REQUIRED

*ZONING ORDINANCE: ARTICLE IV, SECTION 7.A.5 REMOVAL OF ENERGY, UTILITY, CORRIDOR, STAIRWAY, RESTROOM, & BUILDING MAINTENANCE AREA WAS SUBTRACTED FROM THE RETAIL UNITS S.F. FLOOR SPACE.

GROSS – 18,390 SF OF FLOOR SPACE
NET – OFFICE 1,025 SF OF FLOOR SPACE = 4 VEHICLES
MANUFACTURING–13,135 SF OF FLOOR SPACE= 14 VEHICLES

EXISTING # 141 BUILDING – SPACES PROVIDED

VEHICLE SPACES EXISTING = 25 VEHICLE SPACES
PLUS ONE EXISTING LOADING DOCK

EXISTING # 143 BUILDING – SPACES PROVIDED

VEHICLE SPACES EXISTING = 19 VEHICLE SPACES
PLUS ONE EXISTING LOADING DOCK

MA DOT NOTES

CURB CUTS:

ENTRY WAYS NEED TO BE COMPLETELY DEFINED.

1. MA DOT SPECIFICATIONS – THE MINIMUM RADIUS FOR TRACTOR TRAILOR ENTRANCE FROM A MAJOR HIGHWAY.
2. TYPE-2 HOT MIX ASPHALT CURB (BERM) IS TO BE INSTALLED ALONG ALL CURBING DESIGNATED WITH THE RADIUS 30.00' AT THE ENTRANCE EXIT WAYS INTO AND OUT OF THE PROPERTY.
3. "TYPE-2" HOT MIX ASPHALT CURB (BERM) ALSO IS TO BE INSTALLED ALONG THE HIGHWAY FRONTAGE LINE AT THE EDGE OF BOTH THE PROPOSED ISLANDS AND THE ROUTE 20 TRAFFIC FLOW PAVEMENT. A "TYPE-2" INSTALLATION DETAIL HAS BEEN PROVIDED.
4. "TYPE-A" HOT MIX ASPHALT CURB (BERM) IS TO BE INSTALLED ALONG THE BACKSIDE OF THE ISLANDS WHERE THE MassDOT PROPERTY ABUTS EITHER THE PAVEMENT OR THE PARKING AREA OF THE PROPERTY. A "TYPE-A" INSTALLATION DETAIL HAS BEEN PROVIDED.
5. THE INTERIOR OF ALL ISLNDS ARE TO RECEIVE A 6" THICK LAYER OF LOAM AND, WHEN PARTICLE DURING THE GROWING SEASON, SEEDED.
6. THE MassDOT DRAINAGE STRUCTURE, WHICH USED TO BE LOCATED ALONG THE EDGE OF THE ROAD ON THE EAST SIDE OF THE PROPERTY, WAS REMOVED. THIS DRAINAGE STRUCTURE REMOVAL OCCURED DURING THE ROUTE 20 SEWER MAIN REPLACEMENT PROJECT.
7. THERE ARE CURRENTLY NO PUBLIC OR PRIVATE DRAINAGE STRUCTURES ALONG THE PAVEMENT IN FRONT OF THE PROPERTY.

U.S. ROUTE 20
EAST BOUND SIDE
MASS STATE HIGHWAY

TYPE "A" INSTALL DETAIL

HOT MIX ASPHALT CURBS (E 106.1.0)

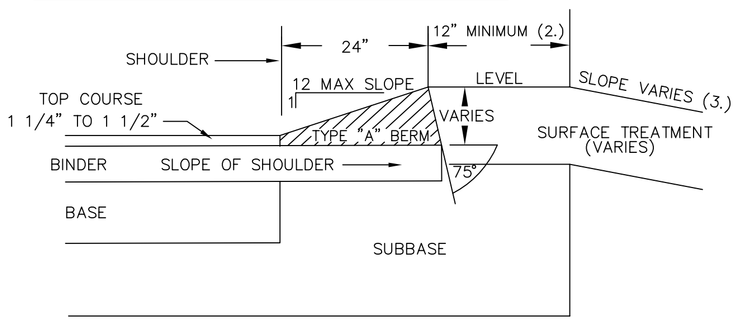

NOTE:
FOR MODIFIED BERM THE SLOPE REMAINS CONSTANT AT 1(V) TO 12 (H)
1. THIS DIMENSION VARIES WITH THE THICKNESS OF THE TOP COURSE AND SLOPE OF THE BINDER

TYPE 2 INSTALL DETAIL

HOT MIX ASPHALT CURBS (E 106.2.0)

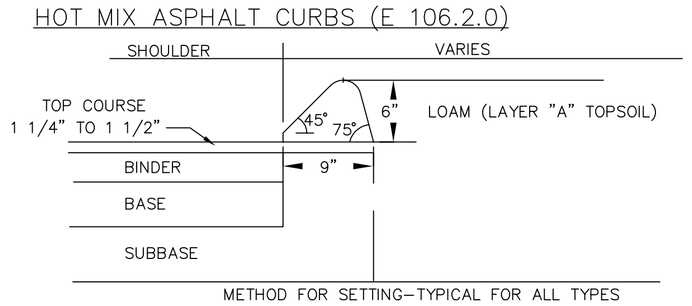

METHOD FOR SETTING–TYPICAL FOR ALL TYPES

THE EXISTING PROPERTY SITE IMPROVEMENTS SHOWN ARE THE RESULT OF A FIELD SURVEY WHICH OCCURED BETWEEN NOVEMBER 22, 2019 THROUGH APRIL 28, 2020.

THE PROPOSED MassDOT CURB CUT INFORMATION SHOWN IS A DIRECT RESULT OF REVIEW COMMENTS PREPARED BY THE CURB CUT PERMITS SECTION OF MassDOT.

DAVID TEACHOUT P.L.S. # 32659
PROJECT ASSISTED BY DAVID SADOWSKI

PROPOSED ADDITION PLAN
141 SOUTHWEST CUTOFF
WORCESTER, MASSACHUSETTS

PREPARED FOR: F CARRIER REALTY LLC
OWNER OF: FRANK CARRIER, MANAGER
141 SOUTHWEST CUTOFF
WORCESTER, MA.

D. J. & ASSOCIATES
7 CEDAR STREET
CLINTON, MA

REV 11: PARKING SPACE REMOVAL	DATED: 9–10–20
REV 10: UNIFORM CURB CUT OPENINGS	DATED: 7–31–20
REV 9: MASS HIGHWAY STATIONING	DATED: 7–26–20
DATE: DECEMBER 24, 2019	SCALE: 1" = 30'